CEDARS OF LEBANON STATE PARK SPLASH PAD
CEDARS OF LEBANON STATE PARK
LEBANON, WILSON COUNTY, TENNESSEE
SBC PROJECT NO. 126/015-01-2018

STATE OF TENNESSEE, DEPARTMENT OF GENERAL SERVICES FOR DEPARTMENT OF ENVIRONMENT AND CONSERVATION

INDEX OF SHEETS

GENERAL

G-101	COVER SHEET
G-102	EROSION CONTROL NOTES 1 OF 3
G-103	EROSION CONTROL NOTES 2 OF 3
G-104	EROSION CONTROL NOTES 3 OF 3
G-105	FIRE HYDRANT ACCESS AND TURNAROUND DIAGRAM

ARCHITECTURAL

AD-101	DEMOLITION PLAN
A-101	PUMPHOUSE ENLARGED PLANS, SOUTH AND WEST ELEVATIONS
A-102	BUILDING SECTION, WALL DETAIL, AND ROOF DETAILS
A-103	TRUSS CRITERIA AND DETAILS
A-104	DOOR AND FRAME ELEVATIONS, SCHEDULES AND DETAILS

CIVIL

C-101	SITE DEMOLITION PLAN
C-102	SITE LAYOUT PLAN
C-103	FINISH GRADING PLAN
C-104	EQUIPMENT LAYOUT PLAN
C-105	INITIAL/FINAL EPSC PLAN
C-106	SPLASH FEATURE DETAILS 1 OF 2
C-107	SPLASH FEATURE DETAILS 2 OF 2
C-108	SPLASH FEATURE FOUNDATION AND DETAILS
C-109	MISCELLANEOUS DETAILS 1 OF 2
C-110	MISCELLANEOUS DETAILS 2 OF 2

PLUMBING

P-101	PLUMBING GENERAL NOTES AND ABBREVIATIONS
P-102	BELOW-GRADE PLUMBING PLAN
P-103	ENLARGED PLUMBING PLAN
P-104	PLUMBING DIAGRAM
P-105	PLUMBING DETAILS
P-106	PLUMBING SCHEDULES

ELECTRICAL

ED-101	SITE ELECTRICAL DEMOLITION PLAN
E-101	ELECTRICAL GENERAL NOTES AND SCHEDULES
E-102	SITE ELECTRICAL PLAN

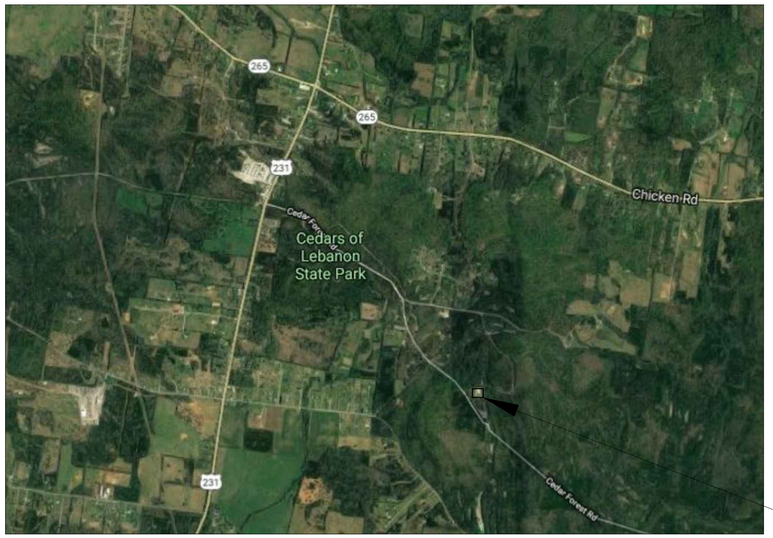

PROJECT LOCATION

LOCATION MAP

PROJECT PHYSICAL ADDRESS:

CEDARS OF LEBANON STATE PARK
328 CEDAR FOREST ROAD
LEBANON, WILSON COUNTY, TN 37090

STATE OF TENNESSEE ADOPTED CODES AND STANDARDS FOLLOWED (BUT NOT LIMITED TO):

- INTERNATIONAL BUILDING CODE, 2012 EDITION (EXCLUDING CHAPTER 11 AND SECTION 3411)
- INTERNATIONAL FUEL GAS CODE, 2012 EDITION
- INTERNATIONAL MECHANICAL CODE, 2012 EDITION
- NATIONAL ELECTRIC CODE, NFPA 70, 2017 EDITION
- INTERNATIONAL ENERGY CONSERVATION CODE, 2012 EDITION, OR
- INTERNATIONAL ENERGY CONSERVATION CODE, 2006 EDITION (GROUP F-1, F-2, S-1, & S-2 ONLY)
- INTERNATIONAL FIRE CODE, 2012 EDITION.
- INTERNATIONAL EXISTING BUILDING CODE, 2012 EDITION (SCOPE OF WORK RELATED TO EXISTING BUILDINGS)
- 2010 ADA STANDARDS FOR ACCESSIBLE DESIGN (FOR BUILDINGS REQUIRED TO COMPLY WITH TENNESSEE PUBLIC BUILDING ACCESSIBILITY ACT)
- NFPA 101 LIFE SAFETY CODE, 2012 EDITION (STATE BUILDINGS, EDUCATIONAL OCCUPANCIES AND ANY OCCUPANCY REQUIRING AN INSPECTION BY THE TSFMO FOR INITIAL LICENSURE)

USE AND OCCUPANCY CLASSIFICATION: ASSEMBLY GROUP A-5
CONSTRUCTION TYPE: TYPE IIIA
RISK CATEGORY: III (IBC TABLE 1604.5)
PROPOSED CONSTRUCTION IS NOT PROTECTED BY A FIRE SPRINKLER SYSTEM.

TFM No. 00095-G
PROJECT No. 2019-08-15-06

RESPONDING FIRE DEPARTMENT:

JEREMY HOBBS, FIRE CHIEF/DEPUTY DIRECTOR
WILSON COUNTY EMERGENCY MANAGEMENT AGENCY - STATION 5
8814 STEWARTS FERRY PIKE
MT. JULIET, TN 37122
PH: 615-444-8777

SCALES USED FOR VARIOUS PLAN SHEETS

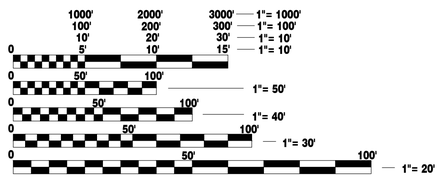

FULL SIZE PLANS HAVE BEEN PREPARED USING STANDARD ENGINEERING SCALES. REDUCED SIZED PLANS WILL NOT CONFORM TO STANDARD SCALES. IN MAKING MEASUREMENTS ON REDUCED PLANS, THE ABOVE SCALES MAY BE USED.

TENNESSEE 811 (TN ONE CALL)
ALWAYS CALL 811 BEFORE YOU DIG!!!
1-800-351-1111

JAMES L. SIEFERT, PE
DATE: 08/16/2019
LICENSE EXPIRES: 04/30/2021

JEREMY D. SARGENT, AIA
DATE: 08/16/2019
LICENSE EXPIRES: 05/31/2020

LORI A. WALTERS, PE
LICENSE EXPIRES: 05/31/2021

THIS PROJECT IS FUNDED IN PART BY A LAND WATER AND CONSERVATION FUND PROGRAM GRANT ADMINISTERED BY THE TENNESSEE DEPARTMENT OF ENVIRONMENT AND CONSERVATION RECREATION EDUCATIONAL SERVICES DIVISION.

DATE: 08/16/2019

Hurst-Rosche, Inc.
SECRETARY OF STATE CONTROL NUMBER: 000602303
561 MURFREESBORO PIKE
NASHVILLE, TN
PH: 615.454.6615
www.hurst-rosche.com
HILLSBORO, IL
EAST ST. LOUIS, IL
MARION, IL
ARNOLD, MO
NEOSHO, MO

CEDARS OF LEBANON STATE PARK SPLASH PAD
STATE OF TENNESSEE, DEPARTMENT OF GENERAL SERVICES FOR
DEPARTMENT OF ENVIRONMENT AND CONSERVATION
LEBANON, WILSON COUNTY, TENNESSEE
SBC NO. 126/015-01-2018

MARK	DATE	DESCRIPTION

DATE: 08-16-2019
PROJECT NO: 360-3308

DESIGN:	DRAWN:	CHECK:
MWL	MWL	JLS

COVER PAGE

G-101

EROSION CONTROL NOTES (1 OF 2)

GENERAL INFORMATION

THIS STORM WATER POLLUTION PREVENTION PLAN (SWPPP) IS DEVELOPED IN ACCORDANCE WITH THE TENNESSEE GENERAL NPDES PERMIT FOR DISCHARGES OF STORMWATER ASSOCIATED WITH CONSTRUCTION ACTIVITY (TNCGP, GENERAL PERMIT No. XXXXXXXXX) AND IS PREPARED USING USING SOUND ENGINEERING PRACTICES. HURST ROSCHE, INC. PERSONNEL INVOLVED WITH THE DEVELOPMENT OF THIS PLAN HAVE COMPLETED BOTH THE FUNDAMENTALS OF EROSION PREVENTION & SEDIMENT CONTROL SITES AND THE DESIGN PRINCIPLES OF EROSION PREVENTION & SEDIMENT CONTROLS FOR CONSTRUCTION SITES COURSES AVAILABLE FROM THE STATE OF TENNESSEE.

AS INSTRUCTED IN SECTION 2.7 OF THE TNCGP, THIS PLAN AND ALL ATTACHMENTS ARE HEREBY SUBMITTED TO THE LOCAL ENVIRONMENTAL FIELD OFFICE (EFO), ALONG WITH THE COMPLETE, CORRECTLY SIGNED NOTICE OF INTENT (NOI).

SITE WIDE/PRIMARY PERMITTEE (OWNER):

_____
COMPANY

_____
PRINTED NAME

_____
TITLE

SECONDARY PERMITTEE (CONTRACTOR):

_____
COMPANY

_____
PRINTED NAME

_____
TITLE

THE ABOVE-NAMED CONTRACTOR IS RESPONSIBLE FOR THE INSTALLATION, MAINTENANCE, AND INSPECTIONS OF EROSION PREVENTION AND SEDIMENT CONTROL (EPSC) MEASURES AND ALL INSPECTION DOCUMENTATION REQUIRED BY TDEC.

PRIMARY PERMITTEE (OWNER) RESPONSIBILITIES:
- OWNER WILL BE RESPONSIBLE FOR GENERAL OVERSIGHT OF THE PROJECT, INCLUDING REVIEW OF THE SWPPP AND ANY AMENDMENTS, SPECTION REPORTS, AND CORRECTIVE ACTION FOR CONFORMANCE WITH THE PERMIT REQUIREMENTS.
- OWNER WILL PARTICIPATE DURING SELF-INSPECTIONS CONDUCTED BY THE PRIMARY CONTRACTOR AND ITS SUBCONTRACTORS.

SECONDARY PERMITTEE (CONTRACTOR) RESPONSIBILITIES:
- PRIMARY CONTRACTOR AND ITS SUBCONTRACTORS WILL MAINTAIN THE SWPPP DOCUMENTATION AND WILL CONDUCT AND DOCUMENT SELF-INSPECTIONS REQUIRED BY THE TENNESSEE CGP FOR AREAS OF THE PROJECT SITE COVERED BY THIS SWPPP.
- PRIMARY CONTRACTOR AND ITS SUBCONTRACTORS WILL PROVIDE COPIES OF INSPECTION REPORTS TO OWNER WITHIN 24 HOURS FOLLOWING EACH INSPECTION. INCIDENTS OF NON-COMPLIANCE WILL BE IMMEDIATELY BROUGHT TO THE ATTENTION OF THE OWNER.
- PRIMARY CONTRACTOR AND ITS SUBCONTRACTORS WILL BE RESPONSIBLE FOR MAINTAINING COMPLIANCE WITH THE APPLICABLE SECTIONS OF THE SWPPP, INCLUDING INSTALLATION OF EROSION AND SEDIMENT CONTROLS, AND THE REQUIREMENTS IN THE TNCGP. ANY BMP CHANGES THAT WOULD TRIGGER THE NEED FOR A SWPPP MODIFICATION WILL BE PROMPTLY COMMUNICATED TO THE OWNER.
- PRIMARY CONTRACTOR AND ITS SUBCONTRACTORS WILL MAINTAIN EROSION AND SEDIMENT CONTROL BMPS IN ALL AREAS OF THE SITE UNDER ITS DAY-TO-DAY CONTROL.
- PRIMARY CONTRACTOR AND ITS SUBCONTRACTORS WILL PROVIDE ADEQUATELY DESIGNATED CONCRETE WASHOUT AREAS AND WILL BE RESPONSIBLE FOR PROPER DISPOSAL OF THE CONCRETE, MORTAR, OR GROUT COLLECTED THERE.
- PRIMARY CONTRACTOR AND ITS SUBCONTRACTORS WILL BE RESPONSIBLE FOR INSPECTION AND REPLACEMENT OF ANY BMPS AS NECESSARY.
- PRIMARY CONTRACTOR AND ITS SUBCONTRACTORS WILL NOT STORE ERODIBLE OR HAZARDOUS MATERIALS ON THE PROPERTY.

THE CONTRACTOR AS NAMED ABOVE IS RESPONSIBLE FOR THE INSTALLATION, MAINTENANCE, AND INSPECTIONS OF EROSION PREVENTION AND SEDIMENT CONTROL (EPSC) MEASURES AND ALL INSPECTION DOCUMENTATION REQUIRED BY TDEC.

CURRENT VERSIONS OF THIS SWPPP, THE NOI, AND THE NOTICE OF COVERAGE (NOC) WILL BE KEPT ON SITE FOR THE DURATION OF THE PROJECT. THESE ITEMS WILL BE AVAILABLE FOR USE BY ALL OPERATORS AND SITE PERSONNEL INVOLVED WITH EPSC, AND WILL BE AVAILABLE TO TDEC PERSONNEL VISITING THE SITE. A NOTICE WILL BE POSTED NEAR THE CONSTRUCTION ENTRANCE DURING CONSTRUCTION CONTAINING A COPY OF THE NOC WITH THE NPDES TRACKING NUMBER ASSIGNED BY THE EFO, THE NAME AND TELEPHONE NUMBER OF A CONTACT PERSON FOR THE DEVELOPMENT, AND A BRIEF DESCRIPTION OF THE PROJECT.

ANY NEW CONTRACTOR ON THE PROJECT THAT IS RESPONSIBLE FOR INSTALLING, INSPECTING, OR MAINTAINING EPSC MEASURES WILL SIGN THE CONTRACTOR'S CERTIFICATION ON A COPY OF THE NOI AND WILL SUBMIT IT TO THE LCOAT EFO. ANY CORRESPONDENCE WITH TDEC OR ANY EFO WILL REFERENCE THE NPDES TRACKING NUMBER ASSIGNED BY TDEC TO THE PROJECT. THE CONTRACTOR WILL SUBMIT A NOTICE OF TERMINATION (NOT) AFTER CONSTRUCTION IS COMPLETE AND FINAL STABILIZATION (SECTION 10, TNCGP) OF ALL DISTURBED AREAS HAS BEEN ACHIEVED.

IT IS THE INTENTION AND GOAL OF THE TNCGP AND THIS SWPPP THAT CONSTRUCTION ACTIVITY SHALL BE CARRIED OUT IN SUCH A MANNER THAT WILL PREVENT VIOLATIONS OF WATER QUALITY CRITERIA AS STATED IN CHPATER 1200-04-03.03 OF THE TDEC RULES. THIS INCLUDES, BUT IS NOT LIMITED TO, THE FOLLOWING:
- PREVENTION OF ANY DISCHARGE THAT CAUSES A CONDITION IN WHICH VISIBLE SOLIDS, BOTTOM DEPOSITS, OR TURBIDITY IMPAIRS THE USEFULNESS OF WATERS OF THE STATE FOR ANY OF THE USES DESIGNATED FOR THAT WATER BODY PER TDEC RULES, CHAPTER 1200-4-4.
- THERE SHALL BE NO DISTINCTLY VISIBLE FLOATING SCUM, OIL OR OTHER MATTER CONTAINED IN THE STORMWATER DISCHARGE.
- THE STORMWATER DISCHARGE MUST NOT CAUSE AN OBJECTIONABLE COLOR CONTRAST IN THE RECEIVING STREAM.
- THE STORMWATER DISHARGE MUST RESULT IN NO MATERIALS IN CONCENTRATIONS SUFFICIENT TO BE HAZARDOUS OR OTHERWISE DETRIMENTAL TO HUMANS, LIVESTOCK, WILDLIFE, PLANT LIFE, OR FISH AND AQUATIC LIFE IN THE RECEIVING STREAM. THESE PROVISIONS INCLUDE SPECIES COVERED UNDER SECTION 1.3, SUBPART H, OF THE TNCGP.

THIS PLAN MAY BE AMENDED IN ACCORDANCE WITH CRITERIA STATED IN SECTION 3.4.1. OF THE TNCGP, OR FOR OTHER REASON. WHEN THE PLANS ARE REVISED, THE CONTRACTOR WILL IMPLEMENT THE CHANGES TO EPSC MEASURE WITHIN 48 HOURS AFTER THE NEED FOR MODIFICATION IS IDENTIFIED.

IN ACCORDANCE WITH SECTION 3.1.2. OF THE TNGCP, A SITE ASSESSMENT IS NOT REQUIRED AS PART OF THIS PROJECT SINCE THE OUTFALL INVOLVES LESS THAN 10 ACRES. IT DOES NOT DRAIN TO AN IMPAIRED OR EXCEPTIONAL QUALITY WATERS.

CITATIONS IN PARENTHESIS INDICATE SECTIONS OF THE CURRENT CONSTRUCTION GENERAL STORMWATER PERMIT (CGP).

1. SWPPP REQUIREMENTS (3.0)
   - 1.1 HAS THE SWPPP TEMPLATE BEEN PREPARED BY AN INDIVIDUAL THAT HAS THE FOLLOWING CERTIFICATIONS (3.1.1) YES ☒ NO ☐ (CHECK ALL THAT APPLY BELOW)
     - 1.1.1. ☐ CERTIFIED PROFESSIONAL IN EROSION AND SEDIMENT CONTROL (CPESC); OR
     - 1.1.2. ☐ TDEC LEVEL II
   - 1.2. DOES THE EPSC PLANS INVOLVE STRUCTURAL DESIGN, HYDRAULIC, HYDROLOGIC OR OTHER ENGINEERING CALCULATIONS FOR EPSC STRUCTURAL MEASURES (SEDIMENT BASINS, ETC.)? YES ☐ NO ☒ (3.1.1.)
     IF YES, HAVE THE EPSC PLANS BEEN PREPARED, STAMPED AND CERTIFIED BY A LICENSED PROFESSIONAL ENGINEER OR LANDSCAPE ARCHITECT? YES ☐ NO ☐
   - 1.3. DO THE PROJECT STORMWATER OUTFALLS DISCHARGE INTO THE FOLLOWING? (5.4.1.) YES ☐ NO ☒ (CHECK ALL THAT APPLY BELOW)
     - 1.3.1. ☐ IMPAIRED WATERS (303d FOR SILTATION OR HABITAT ALTERATION)
     - 1.3.2. ☐ TENNESSEE KNOWN EXCEPTIONAL WATERS
     IF YES, HAVE THE EPSC PLANS BEEN PREPARED BY AN WHO HAS COMPLETED TDEC LEVEL II? YES ☐ NO ☐ N/A ☒ (5.4.1.b); AND
     IF YES, HAS THE SWPPP TEMPLATE BEEN PREPARED BY AN INDIVIDUAL WHO HAS COMPLETED TDEC LEVEL II? YES ☐ NO ☐ N/A ☒ (5.4.1.b)

2. SITE DESCRIPTIONS (3.5.1.)
   - 2.1. PROJECT LIMITS REFER TO EROSION CONTROL PLAN SHEET C-105 & C-106 (3.5.1.g):
   - 2.2. PROJECT DESCRIPTION: (3.5.1.a)
     TITLE: CEDARS OF LEBANON STATE PARK SPLASH PAD
     COUNTY: WILSON COUNTY
     LOCATION: 328 CEDARS FOREST ROAD, LEBANON, TN 37090
   - 2.3. SITE MAP(S): REFER TO APPENDIX 1 – USGS QUADRANGLE MAP (3.5.1.g)
   - 2.4. DESCRIPTION OF EXISTING SITE TOPOGRAPHY (3.5.1.d): A COMBINATION OF EXISTING PAVING, CONCRETE AND GREEN BUFFERS. THE SITE SLOPES TO A GULLY LOCATED SOUTH OF THE SITE.
   - 2.5. MAJOR SOIL DISTURBING ACTIVITIES (3.5.1.b) (CHECK ALL THAT APPLY)
     - 2.5.1. ☒ CLEARING AND GRUBBING
     - 2.5.2. ☒ EXCAVATION
     - 2.5.3. ☒ CUTTING AND FILLING
     - 2.5.4. ☒ FINAL GRADING AND SHAPING
     - 2.5.5. ☒ UTILITIES
     - 2.5.6. ☐ OTHER (DESCRIBE):
   - 2.6. TOTAL PROJECT AREA (3.5.1.c): 0.73 ACRES
   - 2.7. TOTAL AREA TO BE DISTURBED (3.5.1.c): 0.62 ACRES
     IF GREATER THAN 50 ACRES, HAS CONSTRUCTION PROJECT PHASING BEEN SPECIFIED IN SECTION 3 BELOW AND IN THE PLANS (3.5.3.1.k)? LIMITATIONS ON WORK? YES ☐ NO ☐ N/A ☐
     NOTE: BECAUSE THE ENTIRE DISTURBED AREA WILL NOT EXCEED 50 ACRES, ONLY ONE PHASE IS REQUIRED FOR THE PROJECT. ARE THERE ANY SEASONAL LIMITATIONS ON WORK? YES ☐ NO ☐
     IF YES, DESCRIBE AND LIST THE CORRESPONDING PLANT SHEET:
   - 2.8. SOIL PROPERTIES (3.5.1.e)(4.1.1.)
     SOIL PROPERTIES FOR THE PRIMARY SOILS ARE LISTED IN THE TABLE BELOW.

SOIL PROPERTIES			
PRIMARY SOIL NAME	HSG	% OF SITE	ERODIBILITY (k VALUE)
TALBOTT SILT LOAM, 5 TO 20% SLOPES, ERODED ROCKY	C	100	0.43

2.9. PROJECT RUNOFF COEFFICIENTS AND AREA PERCENTAGES (3.5.1.f)

RUNOFF COEFFICIENTS FOR EXISTING CONDITIONS			
AREA TYPE	AREA (AC)	PERCENTAGE OF WATERSHED (%)	RUNOFF COEFFICIENT
IMPERVIOUS	0.62	100	98

RUNOFF COEFFICIENTS FOR POST-CONSTRUCTION CONDITIONS			
AREA TYPE	AREA (AC)	PERCENTAGE OF WATERSHED (%)	RUNOFF COEFFICIENT
IMPERVIOUS	0.62	100	98

3. ORDER OF CONSTRUCTION ACTIVITIES (3.5.1.b, 3.5.2.a)

SEQUENCE	DESCRIPTION
1	INSTALL SILT FENCE AND INLET PROTECTION
2	DEMOLITION AND RECONSTRUCTION OF PUMPHOUSE
	MAINTAIN ALL EPSC MEASURES PREVIOUSLY INSTALLED
	DEMOLITION OF CONCRETE DECKING
	DEMOLITION OF BOTTOM OF LARGE SWIMMING POOL
3	MAINTAIN ALL EPSC MEASURES PREVIOUSLY INSTALLED
	BACKFILL BOTH SWIMMING POOLS WITH GRAVEL
	INSTALLATION OF PUMPING AND TANKS
4	MAINTAIN ALL EPSC MEASURES PREVIOUSLY INSTALLED
	POURING OF CONCRETE SPLASH DECKING
	INSTALLATION OF SPLASH PAD EQUIPMENT
	IMPLEMENTING OF SITE IMPROVEMENTS (FENCING, DECK COATING)
5	STABILIZE SITE WITH SEED/STRAW IN ALL AREAS
6	ONCE VEGETATION IS ESTABLISHED, REMOVE EPSC MEASURES

3.1. PERFORM CLEARING AND GRUBBING (NOT MORE THAN 15 DAYS PRIOR TO GRADING OR EARTH-MOVING. REFER TO THE STABILIZATION PRACTICES BELOW).
3.2. STABILIZE DISTURBED AREAS WITHIN 14 DAYS OF COMPLETING ANY PHASE OF ACTIVITY.

HR
Hurst-Rosche, Inc.
SECRETARY OF STATE CONTROL NUMBER: 000602303
561 MURFREESBORO PIKE
NASHVILLE, TN
PH: 615.454.6615
www.hurst-rosche.com
HILLSBORO, IL
EAST ST. LOUIS, IL
MARION, IL
ARNOLD, MO
NEOSHO, MO

JEREMY D SARGENT
REGISTERED ARCHITECT
TENNESSEE
DEPARTMENT OF AGRICULTURE
No. 106183
STATE OF TENNESSEE

SIGNATURE
DATE 08-16-2019
LICENSE EXPIRES 05-31-2020

CEDARS OF LEBANON STATE PARK SPLASH PAD
STATE OF TENNESSEE, DEPARTMENT OF GENERAL SERVICES FOR
DEPARTMENT OF ENVIRONMENT AND CONSERVATION
LEBANON, WILSON COUNTY, TENNESSEE
SBC NO. 126/015-01-2018

MARK	DATE	DESCRIPTION

DATE: 08-16-2019
PROJECT NO: 360-3308

DESIGN:	DRAWN:	CHECK:
MWL	MWL	JLS

EROSION CONTROL NOTES - PAGE 1 OF 3

G-102

EROSION CONTROL NOTES (2 OF 2)

4. STORMWATER MANAGEMENT
   4.1. ALL DRAINAGE CONVEYANCES HAVE BEEN DESIGNED TO ACCOMMODATE PEAK FLOWS FOR A 10-YEAR STORM EVENT. DETENTION IS NOT REQUIRED WITH THIS PHASE OF THE PROJECT. THIS PROJECT WILL BE DESIGNED IN ACCORDANCE WITH METRO STORMWATER REGULATIONS VOLUME 4.
   4.2. EROSION AND SEDIMENT CONTROLS ARE DESIGNED TO ACCOMMODATE A 2-YEAR 24-HOUR STORM EVENT.

5. 303 (d) SPECIAL REQUIREMENTS
   5.1. STORMWATER RUNOFF FROM THE SITE ULTIMATELY DISCHARGES TO THE CUMBERLAND RIVER, WHICH IS NOT LISTED ON THE EPA FINAL 2014 303(d) OF IMPAIRED WATERS IN TENNESSEE.

6. SAFE DAMS ACT INFORMATION
   6.1. THERE IS NO SURFACE DETENTION PROPOSED WITH THIS PROJECT.

7. EROSION AND SEDIMENT CONTROLS
   7.1. STABILIZATION PRACTICES
      7.1.1. TEMPORARY STABILIZATION – DENUDED AREAS, SOIL STOCKPILES, DIKES, DAMS, CHANNELS, ETC. ARE TO BE SEEDED AND MULCHE. AREAS AND TIME OF EXPOSURE OF UNPROTECTED SOILS SHALL BE KEPT TO A MAXIMUM OF 14 DAYS, WITH SLOPES (3:1 AND GREATER) LIMITED TO A MAXIMUM OF 7 DAYS. SUCH AREAS ARE TO IMMEDIATELY RECEIVE SEED AND MULCH STABILIZATION FOLLOWING THIS TIME PERIOD. ON STEEP SLOPES AND CHANNELS, SOD SHALL BE FASTENED TO THE GROUND WITH WIRE STAPLES OR WOOD PEGS. WHERE SURFACE WATER CANNOT BE DIVERTED FROM FLOWING OVER THE FACE OF SLOPES, INSTALL A STRIP OF HEAVY JUTE OR PLASTIC NETTING AND FASTEN TIGHT ALONG THE CROWN OR TOP OF THE SLOPE FOR EXTRA PROTECTION AGAINST LIFTING AND UNDERCUTTING OF SOD. SUITABLE BARRICADES AND GUARDS SHALL BE ERECTED TO PREVENT EQUIPMENT OR MATERIAL FROM BEING PLACED ON ANY PLANTED AREA. PLASTIC LINING SHALL BE USED ON ALL DITCHES AND EXPOSED SURFACES WHEN TIME DOES NOT PERMIT THE CONTRACTOR TO USE SEED AND MULCH FOR STABILIZATION.
      7.1.2. PERMANENT STABILIZATION – SLOPES AND DITCHES THAT ARE CONSTRUCTED TO FINAL SUB-GRADE OR A PORTION OF ANY SLOPE OR DITCH THAT IS CONSTRUCTED TO SUB-GRADE SHALL IMMEDIATELY RECEIVE TOPSOIL AND FINAL STABILIZATION. ALL SLOPES ARE TO RECEIVE STABILIZATION AS INDICATED ON THE CONSTRUCTION PLANS. THE CONTRACTOR SHALL BE RESPONSIBLE FOR WATERING SEEDED AREAS TO PREVENT THE SOIL FROM DRYING OUT UNTIL APPROVED OR ACCEPTED. THE CONTRACTOR SHALL BE RESPONSIBLE FOR RESEEDING BARE SPOTS FOR A PERIOD OF ONE YEAR AFTER INSTALLATION OR ACCEPTANCE OF THE PROJECT.
      7.1.3. STRUCTURAL PRACTICES – EROSION CONTROL BARRIERS, INLET PROTECTION DEVICES, AND OTHER BMP PRACTICES WILL BE USED AS FRONT-LINE EROSION CONTROL DEVICES DURING CONSTRUCTION.

THE FOLLOWING PROVIDES A LIST OF STRUCTURAL DEVICES TO BE INSTALLED FOR THIS PROJECT:
- SILT FENCE
- STORM DRAIN INLET PROTECTION
- EROSION CONTROL BLANKET

7.1.4. ADDITIONAL ITEMS
   7.1.4.1. ALL EPSC MEASURES AND RUNOFF CONTROLS ARE TO BE INSTALLED IN ACCORDANCE WITH MANUFACTURER'S STANDARDS AND SPECIFICATIONS.
   7.1.4.2. IF SEDIMENT ESCAPES THE PERMITTED AREA, ALL SEDIMENT ACCUMULATIONS BEYOND THE PROJECT BOUNDARY MUST BE CLEANED UP AND REMOVED FROM THE AREA AS SOON AS POSSIBLE TO MINIMIZE OFF-SITE IMPACTS. SHOULD SEDIMENT REACH A STREAM OR SOME OTHER BODY OF WATER, THE PERMITTEE SHOULD NOT INITIATE REMEDIATION WITHOUT FIRST NOTIFYING AND CONSULTING WITH TDEC. THIS PERMIT DOES NOT AUTHORIZE ACCESS TO PRIVATE PROPERTY AND THUS THE PERMITTEE MUST SETTLE THE REMEDIATION WITH ADJOINING LANDOWNER(S) AFFECTED BY THE OFFSITE SEDIMENTATION.
   7.1.4.3. OFFSITE MATERIAL STORAGE IS ALLOWED SOLELY BY THE PERMITTED PROJECT.

8. ONSITE WASTE DISPOSAL
   8.1. THERE IS NO ON-SITE WASTE DISPOSAL AS PART OF THIS DEVELOPMENT.

9. OFF-SITE STORMWATER
   9.1. THE AREA OF THE PROPOSED DEVELOPMENT IS LOCATED ON A TOPOGRAPHIC KNOLLS WHERE RUNOFF DISCHARGES TO THE WEST INTO A EXISTING DRAINAGE DRAINS ALONG 10TH CIRCLE. NO OFF-SITE RUNOFF IS ANTICIPATED THROUGH THE PROPOSED DEVELOPMENT.

10. FEDERALLY PROTECTED WILDLIFE
   10.1 THE PROPOSED CONSTRUCTION ACTIVITIES ARE NOT ANTICIPATED TO DISTURB NOR HARM ANY LEGALLY PROTECTED STATE OR FEDERAL LISTED THREATENED OR ENDANGERED AQUATIC LIFE AND/OR HABITAT. THE PERMITTEE MUST NOTIFY TDEC IMMEDIATELY IF ANY ENDANGERED SPECIES ARE ENCOUNTERED DURING CONSTRUCTION. TDEC PROHIBIT THE TAKING OF ANY OF THESE SPECIES.

11. INSPECTIONS
   11.1. INSPECTION PERSONNEL – INSPECTION PERSONNEL SHOULD BE EMPLOYEES OF THE PERMIT APPLICANT, THE PRIMARY CONTRACTOR, OR ITS SUBCONTRACTORS, INSPECTORS PERFORMING THE REQUIRED TWICE WEEKLY INSPECTIONS ARE TO HAVE AN ACTIVE CERTIFICATION BY COMPLETING THE "FUNDAMENTALS OF EROSION PREVENTION AND SEDIMENT CONTROL LEVEL I" COURSE. A COPY OF THE CERTIFICATION OR TRAINING RECORD SHOULD BE KEPT ON SITE. THE INSPECTOR SHOULD PERFORM AND DOCUMENT THE REQUIRED INSPECTIONS PER THE ATTACHED INSPECTION REPORT. THE INSPECTOR MAY ALSO HAVE THE FOLLOWING RESPONSIBILITIES:
      I. OVERSEE THE REQUIREMENTS OF OTHER CONSTRUCTION-RELATED PERMITS, SUCH AS AQUATIC RESOURCES ALTERATION PERMIT OR OTHER SUCH CONSTRUCTION ACTIVITY RELATED PERMITS.
      II. UPDATE FIELD SWPPPS.
      III. CONDUCT PRE-CONSTRUCTION INSPECTION TO VERIFY THAT UNDISTURBED AREAS HAVE BEEN PROPERTY MARKED AND INITIAL MEASURES HAVE BEEN INSTALLED.
      IV. INFORM THE PERMIT HOLDER OF ACTIVITIES THAT MAY BE NECESSARY TO GAIN OR REMAIN IN COMPLIANCE WITH CGP AND OTHER ENVIRONMENTAL PERMITS.

   11.2. INSPECTION SCHEDULE AND PROCEDURES
      11.2.1. INSPECTIONS ARE TO BE PERFORMED AT LEAST TWICE EVERY CALENDAR WEEK AND WILL BE PERFORMED AT LEAST 72 HOURS APART. A COPY OF THE INSPECTION FORM IS ATTACHED IN THE APPENDIX.
      11.2.2. WHERE SITES OR PORTIONS OF THE CONSTRUCTION SITE HAVE BEEN TEMPORARILY STABILIZED, OR RUNOFF IS UNLIKELY DUE TO WINTER CONDITIONS OR DUE TO EXTREME DRAUGHT, SUCH INSPECTION ONLY HAS TO BE CONDUCTED ONCE PER MONTH UNTIL THAWING OR PRECIPITATION RESULTS IN RUNOFF OR CONSTRUCTION ACTIVITY RESUMES.
      11.2.3. INSPECTION REQUIREMENTS DO NOT APPLY TO DEFINABLE AREAS THAT HAVE BEEN FINALLY STABILIZED, AS DESCRIBED IN THE CGP.
      11.2.4. BASED ON THE RESULTS OF THE INSPECTION, ANY INADEQUATE CONTROL MEASURES IN DISREPAIR WILL BE REPLACED OR MODIFIED, OR REPAIRED AS NECESSARY, BEFORE THE NEXT RAIN EVENT, BUT IN NO CASE MORE THAN 7 DAYS AFTER THE NEED IS IDENTIFIED.
      11.2.5. BASED ON THE RESULTS OF THE INSPECTION, THE SITE DESCRIPTION AND POLLUTION PREVENTION MEASURES IDENTIFIED IN THE SWPPP WILL BE REVISED AS APPROPRIATE, BUT IN NO CASE LATER THAN 14 DAYS FOLLOWING THE INSPECTION.
      11.2.6. INSPECTION DOCUMENTATION WILL BE MAINTAINED ON SITE AND MADE AVAILABLE TO THE DIVISION UPON REQUEST. INSPECTION REPORTS MUST BE SUBMITTED TO TDEC WITHIN 10 DAYS OF THE REQUEST. IF THE DIVISION REQUESTS THE CONSTRUCTION STORMWATER INSPECTION CERTIFICATION FORM TO BE SUBMITTED, THE FORM MUST CONTAIN THE PRINTED NAME AND SIGNATURE OF THE TRAINED CERTIFIED INSPECTOR AND THE PERSON WHO MEETS THE SIGNATORY REQUIREMENTS OF THE TN CGP.

   11.3. FOR DISCHARGES INTO IMPAIRED OR EXCEPTIONAL TENNESSEE WATER
      11.3.1. THE PERMITTEE WILL PERFORM INSPECTION DESCRIBED ABOVE AT LEAST TWICE EVERY CALENDAR WEEK. INSPECTION WILL BE PERFORMED AT LEAST 72 HOURS APART.
      11.3.2. THE PERMITTEE MUST CERTIFY ON THE INSPECTION FORM PROVIDED WHETHER OR NOT ALL PLANNED AND DESIGNED EROSION PREVENTION AND SEDIMENT CONTROLS ARE INSTALLED AND IN WORKING ORDER. THE FORM MUST CONTAIN THE PRINTED NAME AND SIGNATURE OF THE INSPECTOR AND THE CERTIFICATION MUST BE EXECUTED BY A PERSON WHO MEETS THE SIGNATORY REQUIREMENTS OF THE TN CGP. THE RECORD OF INSPECTIONS MUST BE KEPT AT THE CONSTRUCTION SITE WITH A COPY OF THE SWPPP.

12. SPILLS AND NON-STORM WATER CONTINGENCIES
   12.1. ALL ON-SITE FUELING OF EQUIPMENT AND VEHICLES WILL BE CONDUCTED NEAR THE CONSTRUCTION ENTRANCE/STAGING AREA. ANY SPILLAGE WILL BE REMOVED IMMEDIATELY. CONTAMINATED SOILS WILL BE PLACED ON HEAVY PLASTIC AND COVERED OR PLACED INTO APPROVED CONTAINERS TO PREVENT CONTACT WITH STORM WATER. ALL FUEL TANKS WILL BE IN THE CONTAINMENT AREA. OILS, OTHER VEHICLE FLUIDS, PAINTS, AND SOLVENTS WILL BE STORED IN THE CONSTRUCTION TRAILER. ANY SPILL WILL BE REPORTED TO A REPRESENTATIVE OF THE GENERAL CONTRACTOR FOR THE PROJECT.
   12.2. IF A RELEASE CONTAINING A HAZARDOUS SUBSTANCE IN AN AMOUNT EQUAL TO OR IN EXCESS OF A REPORTING QUANTITY ESTABLISHED UNDER EITHER 40 CFR 117 OR 40 CFR 302 OCCURS DURING A 24-HOUR PERIOD, THE CONTRACTOR WILL IMMEDIATELY NOTIFY THE PERMITTEE WHO SHALL THEN DO THE FOLLOWING: NOTIFY THE NATIONAL RESPONSE CENTER (NRC) (800-424-8802) AND THE TENNESSEE EMERGENCY MANAGEMENT AGENCY (TEMA) (EMERGENCIES: 800-262-3300; NON-EMERGENCIES: 800-262-3400); AS WELL AS THE LOCAL EFO. ALSO, THE OWNER WILL PREPARE A REVISION OF THIS DOCUMENT TO IDENTIFY MEASURES WHICH WILL PREVENT THE REOCCURRENCE OF SUCH RELEASES.
   12.3. EACH CONTRACTOR IS RESPONSIBLE TO PROVIDE LITTER CONTROL FOR TRASH GENERATED BY HIS CREW. A PROPER WASTE DISPOSAL AREAS, SUCH AS A DUMPSTER LOCATED NEAR THE CONSTRUCTION TRAILER, SHALL BE PROVIDED AND WILL BE LIMITED TO GARBAGE AND PAPER TRASH ONLY. PAINT CANS, OIL CANS, USED OIL, AND FILTERS WILL BE CONTAINED AND DISPOSED OF BY THE CONTRACTOR BY TAKING THEM TO THE COUNTY'S HAZARDOUS WASTE DISPOSAL CENTER.
   12.4. THE PERMITTEE MUST DESIGN, INSTALL, IMPLEMENT, AND MAINTAIN EFFECTIVE POLLUTION MEASURES TO MINIMIZE THE DISCHARGE OF POLLUTANTS. AT A MINIMUM, SUCH MEASURES MUST BE DESIGNED, INSTALLED, IMPLEMENTED AND MAINTAINED TO THE CRITERIA SET FORTH IN SECTION 4.1.5 OF THE TNCGP.
   12.5. THE FOLLOWING INCLUDES, BUT IS NOT LIMITED TO, DISCHARGES THAT ARE PROHIBITED AND NOT COVERED BY THIS SWPPP OR THE TNCGP:
      I. WASTEWATER FROM WASHOUT OF CONCRETE, UNLESS MANAGED BY AN APPROPRIATE CONTROL.
      II. WASTEWATER FROM WASHOUT AND CLEANOUT OF STUCCO, PAINT, FORM RELEASE OILS, CURING COMPOUNDS, AND OTHER CONSTRUCTION MATERIAL.
      III. FUELS, OILS, OR OTHER POLLUTANTS USED IN VEHICLE AND EQUIPMENT OPERATION AND MAINTENANCE.
      IV. SOAPS OR SOLVENTS USED IN VEHICLE AND EQUIPMENT WASHING.
   12.6. DISCHARGES FROM DEWATERING ACTIVITIES, INCLUDING DISCHARGES FROM DEWATERING OF TRENCHES AND EXCAVATION, ARE PROHIBITED UNLESS MANAGED BY APPROPRIATE CONTROLS. APPROPRIATE CONTROLS INCLUDE, BUT ARE NOT LIMITED TO: WEIR TANK, DEWATERING TANK, GRAVITY BAG FILTER, SAND MEDIA, PARTICULATE FILTER, PRESSURIZED BAG FILTER, CARTRIDGE FILTER, OR OTHER CONTROL UNITS PROVIDING THE LEVEL OF TREATMENT NECESSARY TO COMPLY WITH PERMIT REQUIREMENTS (SECTION 4.1.4, TNCGP)

Hurst-Rosche, Inc.
SECRETARY OF STATE CONTROL NUMBER: 000602300
561 MURFREESBORO PIKE
NASHVILLE, TN
PH: 615.454.6615
www.hurst-rosche.com
HILLSBORO, IL
EAST ST. LOUIS, IL
MARION, IL
ARNOLD, MO
NEOSHO, MO

JEREMY D. SARGENT
REGISTERED ARCHITECT
PSM AGRICULTURE
No. 106189
STATE OF TENNESSEE

SIGNATURE
08-16-2019
DATE
05-31-2020
LICENSE EXPIRES

CEDARS OF LEBANON STATE PARK SPLASH PAD
STATE OF TENNESSEE, DEPARTMENT OF GENERAL SERVICES FOR
DEPARTMENT OF ENVIRONMENT AND CONSERVATION
LEBANON, WILSON COUNTY, TENNESSEE
SBC NO. 126/015-01-2018

MARK	DATE	DESCRIPTION

DATE: 08-16-2019
PROJECT NO: 360-3308

DESIGN:	DRAWN:	CHECK:
MWL	MWL	JLS

EROSION CONTROL NOTES - PAGE 2 OF 3

G-103

EROSION CONTROL NOTES:

1. ALL EROSION CONTROL PLANS SHALL BE KEPT CURRENT, AND WILL BE AVAILABLE TO ALL OPERATORS AND SITE PERSONNEL INVOLVED W/ EROSION PREVENTION AND SEDIMENT CONTROL FOR PROJECTS REQUIRING COVERAGE UNDER THE TENNESSEE CONSTRUCTION GENERAL PERMIT, A COPY OF THE SWPPP, AND NOI WILL ALSO BE AVAILABLE TO THE SAME PERSONNEL, AND A COPY OF THE NOC WITH THE NPDES TRACKING NUMBER WILL BE POSTED AT THE SITE ENTRANCE.
2. WHERE CONSTRUCTION ACTIVITIES ON A PORTION OF THE SITE ARE TEMPORARILY CEASED FOR A PERIOD OF 14 DAYS OR LONGER, TEMPORARY STABILIZATION OF ALL DISTURBED AREAS, INCLUDING SLOPES AND STOCK PILES SHALL BE COMPLETED. SLOPES WITH WITH A GRADE OF 3:1 OR STEEPER SHALL BE STABILIZED NO LATER THAN 7 DAYS AFTER COMPLETION, WITH NORTH AMERICAN GREEN S150BN EROSION CONTROL BLANKET OR APPROVED EQUAL.
3. ALL EPSC MEASURES SHALL BE INSTALLED PRIOR TO COMMENCING WITH EARTH DISTURBING ACTIVITIES. THESE MEASURES SHALL BE SUBJECT TO A SITE ASSESSMENT WITHIN A MONTH OF COMMENCEMENT. THIS ASSESSMENT WILL BE COMPLETED PER THE CRITERIA SET FORTH IN SECTION 3.1.2 OF THE TENNESSEE CONSTRUCTION GENERAL PERMIT.
4. DISCHARGES FROM DEWATERING ACTIVITIES, INCLUDING DISCHARGES FROM DEWATERING OF TRENCH EXCAVATIONS, ARE PROHIBITED UNLESS MANAGED BY APPROPRIATE CONTROLS. APPROPRIATE CONTROLS INCLUDE, BUT ARE NOT LIMITED TO; WEIR TANK, DEWATERING TANK, GRAVITY BAG FILTER, SAND MEDIA, PARTICULATE FILTER, PRESSURIZED BAG FILTER, CARTRIDGE FILTER, OR OTHERS APPROVED CONTROL UNITS PROVIDING THE LEVEL OF TREATMENT NECESSARY.
5. ALL NEW AND EXISTING DRAINAGE STRUCTURES SHALL HAVE SEDIMENT REMOVED PRIOR TO FINAL ACCEPTANCE.
6. SILT BARRIERS SHALL BE CLEANED OF ACCUMULATED SEDIMENT WHEN APPROXIMATELY 50% FILLED WITH SUCH SEDIMENT.
7. ALL DIMENSIONS AND LOCATIONS OF TEMPORARY EROSION AND WATER POLLUTION CONTROL DEVICES SHALL BE SUBJECT TO ADJUSTMENT AS DESIGNATED BY THE EPSC PROFESSIONAL.
8. WHEN THE TEMPORARY SOIL EROSION AND WATER POLLUTION DEVICES ARE NO LONGER REQUIRED FOR THE INTENDED PURPOSE IN THE OPINION OF THE EPSC PROFESSIONAL, THEY SHALL BE REMOVED.
9. REPLACE SILT BARRIER AS DIRECTED BY THE EPSC PROFESSIONAL.
10. PROHIBITED DISCHARGES FROM THIS SITE INCLUDE: CONCRETE WASHOUT WATER, WATER USED FOR CLEANOUTS OF STUCCO, PAINT, FORM RELEASE OILS, CURING COMPOUNDS, EQUIPMENT FUELS AND OILS, SOAPS AND SOLVENTS USED IN VEHICLE AND EQUIPMENT WASHING. THE CONTRACTOR SHALL BE REQUIRED TO IMPLEMENT THE APPROPRIATE BMPS NECESSARY TO PREVENT THESE MATERIALS FOR CONTAMINATING ANY SITE DISCHARGE WATER. THE LOCATIONS OF THESE BMP,S SHALL BE COORDINATED WITH THE NPDES DEPARTMENT DURING THE PRE-CONSTRUCTION MEETING.
11. CONTRACTOR TO PROVIDE AN AREA FOR CONCRETE WASHDOWN AND EQUIPMENT FUELING IN ACCORDANCE WITH METRO CP-10 AND CP-13, RESPECTIVELY. CONTRACTOR TO COORDINATE EXACT LOCATION WITH NPDES DEPARTMENT DURING PRE-CONSTRUCTION MEETING.
12. CONTROL OF OTHER SITE WASTES SUCH DISCARDING BUILDING MATERIALS, CHEMICALS, LITTER AND SANITARY WASTES THAT MAY CAUSE ADVERSE IMPACTS TO WATER QUALITY IS ALSO REQUIRED BY THE GRADING PERMITTEE. LOCATION OF AND/OR NOTES REFERRING TO THESE BMP'S SHALL BE SHOWN ON THE EPSC PLAN.

NOTES:

1. SILT FENCE SHALL BE CONSTRUCTED BEFORE UPSLOPE GROUND COVER IS REMOVED, CLEARING, GRUBBING, AND STUMPING CAN OCCUR BEFORE SILT FENCE INSTALLATION IF GROUND COVER IS REMOVED.
2. ALL SILT FENCE SHALL BE PLACED AS CLOSE TO THE CONTOUR AS POSSIBLE SO THAT WATER WILL NOT CONCENTRATE AT LOW POINTS IN THE FENCE AND SO THAT SMALL SWALES OR DEPRESSIONS THAT MAY CARRY SMALL CONCENTRATED FLOWS TO THE SILT FENCE ARE DISSIPATED ALONG ITS LENGTH.
3. ENDS OF THE SILT FENCES SHALL BE BROUGHT UPSLOPE SLIGHTLY SO THAT WATER PONDED BY THE SILT FENCE WILL BE PREVENTED FROM FLOWING AROUND THE ENDS.
4. SILT FENCE SHOULD PREFERABLY BE A MIN. OF 10 FEET FROM THE TOE OF SLOPE.
5. THE TRENCH SHALL BE MADE WITH A TRENCHER, CABLE LAYING MACHINE, SLICING MACHINE OR OTHER SUITABLE DEVICE THAT WILL ENSURE AN ADEQUATELY UNIFORM TRENCH DEPTH.
6. WHERE TWO SECTIONS OF PREFABRICATED SILT FENCE ARE COMBINED INTO ONE RUN, THE END POSTS SHALL BE CONNECTED TOGETHER, NOT SIMPLY OVERLAPPED.
7. SILT FENCE SHALL ALLOW RUNOFF TO PASS ONLY AS DIFFUSE FLOW THROUGH THE GEOTEXTILE, IF RUNOFF OVERTOPS THE SILT FENCE, FLOWS AROUND THE ENDS, OR IN ANY OTHER WAY BECOMES CONCENTRATED FLOW, ONE OF THE FOLLOWING SHALL BE PERFORMED, AS APPROPRIATE: A) AN ADDITIONAL RUN OF SILT FENCE SHALL BE PLACED UPSTREAM, B) THE LAYOUT OF THE SILT FENCE SHALL BE CHANGED, C) ACCUMULATED SEDIMENT SHALL BE REMOVED, OR D) OTHER PRACTICES SHALL BE IMPLEMENTED.
8. SEDIMENT DEPOSIT SHALL BE REMOVED WHEN THE DEPOSIT REACHES APPROXIMATELY ONE-HALF OF THE HEIGHT OF THE SILT FENCE.
9. ALL STOCKPILES SHALL BE ENCIRCLED WITH SILT FENCE.
10. SILT FENCE FABRIC SHALL MEET THE FOLLOWING SPECIFICATIONS: MIN TENSILE STRENGTH 120 LBS., ASTM D 4632; MAX ELONGATION AT 60 LBS, 15% ASTM D 4533, APPARENT OPENING SIZE <= 0.84 MM, ASTM D 4751; MIN PERMITTIVITY 1x10-2SEC.-1, ASTM D 4491: WATER FLOW RATE 15 GAL/MIN/SQ.; UV EXPOSURE STRENGTH RETENTION, 70%, ASTM G 4355.

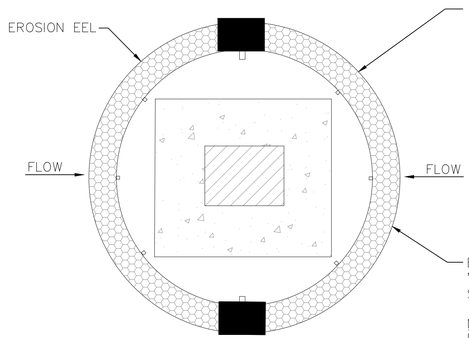

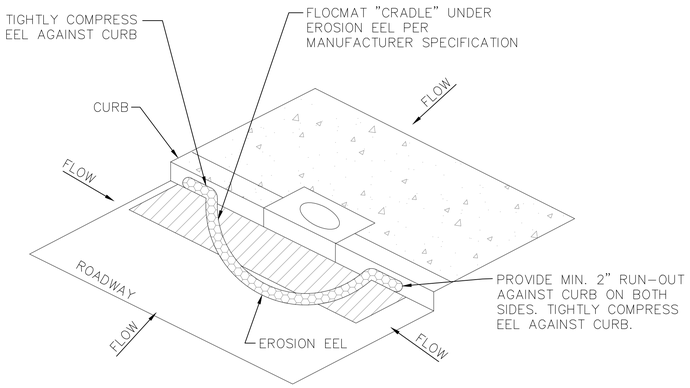

INLET PROTECTION DETAIL
NOT TO SCALE

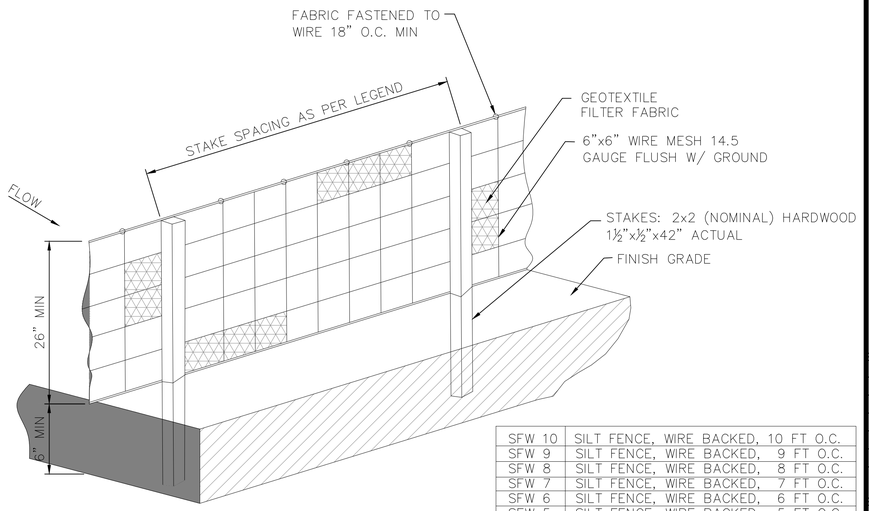

SFW 10	SILT FENCE, WIRE BACKED, 10 FT O.C.
SFW 9	SILT FENCE, WIRE BACKED, 9 FT O.C.
SFW 8	SILT FENCE, WIRE BACKED, 8 FT O.C.
SFW 7	SILT FENCE, WIRE BACKED, 7 FT O.C.
SFW 6	SILT FENCE, WIRE BACKED, 6 FT O.C.
SFW 5	SILT FENCE, WIRE BACKED, 5 FT O.C.
SFW 4	SILT FENCE, WIRE BACKED, 4 FT O.C.

SILT FENCE DETAIL
NOT TO SCALE

Hurst-Rosche, Inc.
SECRETARY OF STATE CONTROL NUMBER: 000602303
561 MURFREESBORO PIKE
NASHVILLE, TN
PH: 615.454.6615
www.hurst-rosche.com
HILLSBORO, IL
EAST ST. LOUIS, IL
MARION, IL
ARNOLD, MO
NEOSHO, MO

JEREMY D. SARGENT
REGISTERED ARCHITECT
No. 106183
STATE OF TENNESSEE

SIGNATURE	
DATE	08-16-2019
LICENSE EXPIRES	05-31-2020

CEDARS OF LEBANON STATE PARK SPLASH PAD
STATE OF TENNESSEE, DEPARTMENT OF GENERAL SERVICES FOR
DEPARTMENT OF ENVIRONMENT AND CONSERVATION
LEBANON, WILSON COUNTY, TENNESSEE
SBC NO. 126/015-01-2018

MARK	DATE	DESCRIPTION

DATE: 08-16-2019
PROJECT NO: 360-3308

DESIGN:	DRAWN:	CHECK:
MWL	MWL	JLS

EROSION CONTROL NOTES - PAGE 3 OF 3

G-104

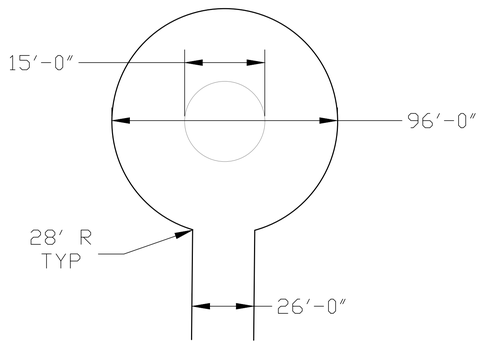

1
G-105
96′ DIAMETER CUL-DE-SAC
SCALE: N.T.S.

Hurst-Rosche, Inc.
SECRETARY OF STATE CONTROL NUMBER: 000602303
561 MURFREESBORO PIKE
NASHVILLE, TN
PH: 615.454.6615
www.hurst-rosche.com
HILLSBORO, IL
EAST ST. LOUIS, IL
MARION, IL
ARNOLD, MO
NEOSHO, MO

JAMES L. SHEPERT
REGISTERED ENGINEER
PE AGRICULTURE
No. 119912
STATE OF TENNESSEE

SIGNATURE
08-16-2019
DATE
05-31-2020
LICENSE EXPIRES

CEDARS OF LEBANON STATE PARK SPLASH PAD
STATE OF TENNESSEE, DEPARTMENT OF GENERAL SERVICES FOR
DEPARTMENT OF ENVIRONMENT AND CONSERVATION
LEBANON, WILSON COUNTY, TENNESSEE
SBC NO. 126/015-01-2018

MARK	DATE	DESCRIPTION

DATE: 08-16-2019
PROJECT NO: 360-3308

DESIGN:	DRAWN:	CHECK:
MWL	MWL	JLS

FIRE HYDRANT ACCESS AND TURNAROUND DIAGRAM

G-105

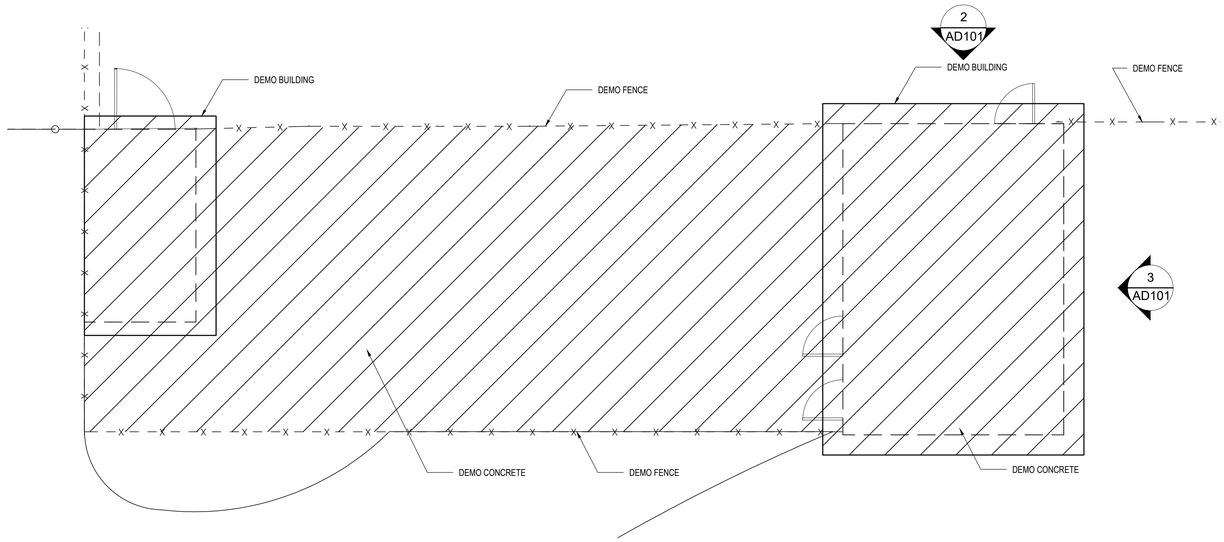

N

1 AD-101 DEMOLITION PLAN

SCALE: 3/16" = 1'-0"

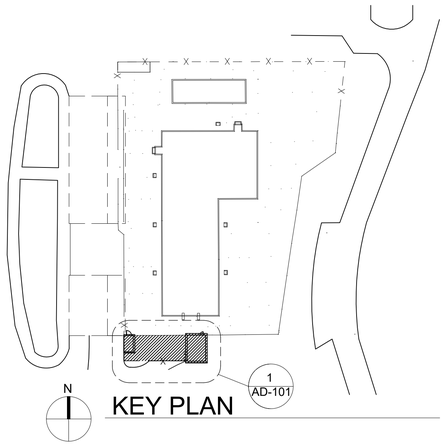

N

KEY PLAN

LEGEND

DEMO AREA

GENERAL NOTES

1. SEE C-101 FOR DEMO SITE PLAN.
2. REMOVE ALL ITEMS INCLUDING FOUNDATIONS IN THEIR ENTIRETY

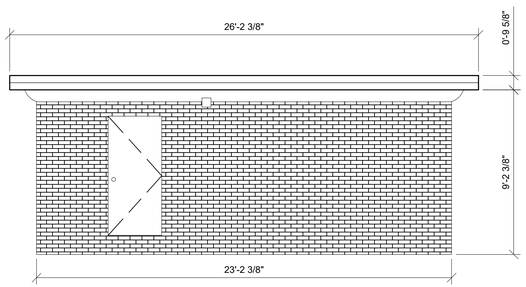

2 AD-101 NORTH ELEVATION

SCALE: 1/4" = 1-0"

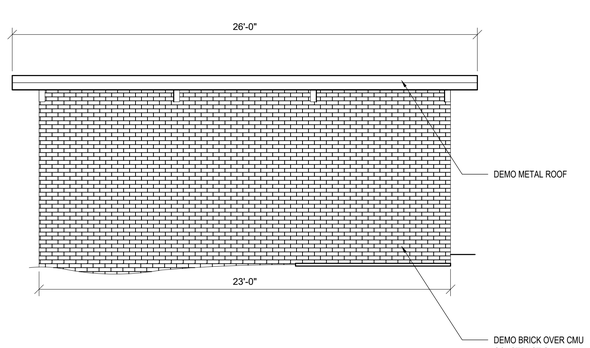

3 AD-101 EAST ELEVATION

SCALE: 1/4" = 1'-0"

Hurst-Rosche, Inc.
SECRETARY OF STATE CONTROL NUMBER: 000602303
561 MURFREESBORO PIKE
NASHVILLE, TN
PH: 615.454.6615
www.hurst-rosche.com
HILLSBORO, IL
EAST ST. LOUIS, IL
MARION, IL
ARNOLD, MO
NEOSHO, MO

JEREMY D. BARCLAY
REGISTERED ARCHITECT
STATE OF TENNESSEE
No. 106183

SIGNATURE
DATE 08-16-2019
LICENSE EXPIRES 05-31-2020

CEDARS OF LEBANON STATE PARK SPLASH PAD
STATE OF TENNESSEE, DEPARTMENT OF GENERAL SERVICES FOR
DEPARTMENT OF ENVIRONMENT AND CONSERVATION
LEBANON, WILSON COUNTY, TENNESSEE
SBC NO. 126/015-01-2018

MARK	DATE	DESCRIPTION

DATE: 08-16-2019
PROJECT NO: 360-3308

DESIGN:	DRAWN:	CHECK:
JDS	CDT	JLS

DEMOLITION PLAN

AD-101

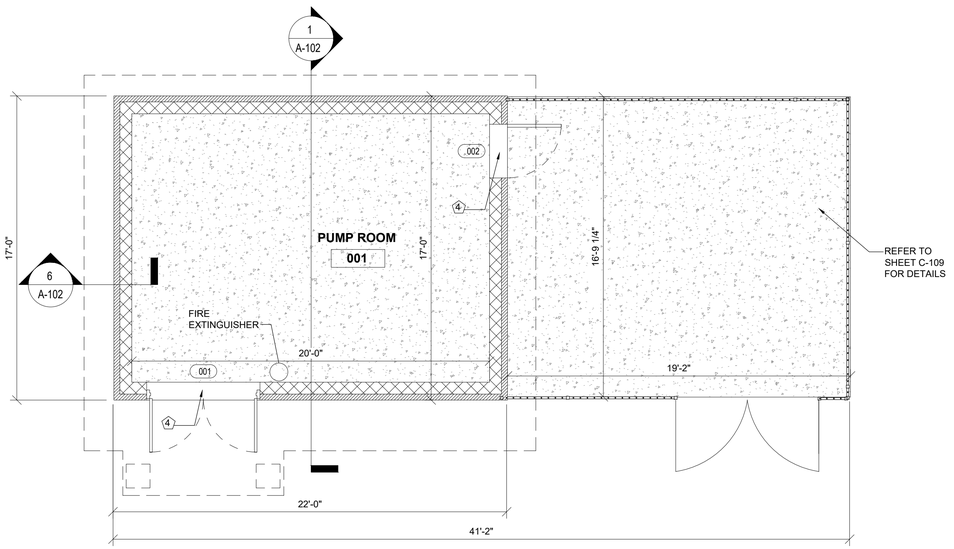

1 A-101 PUMPHOUSE ENLARGED PLAN
SCALE: 1/4" = 1'-0"

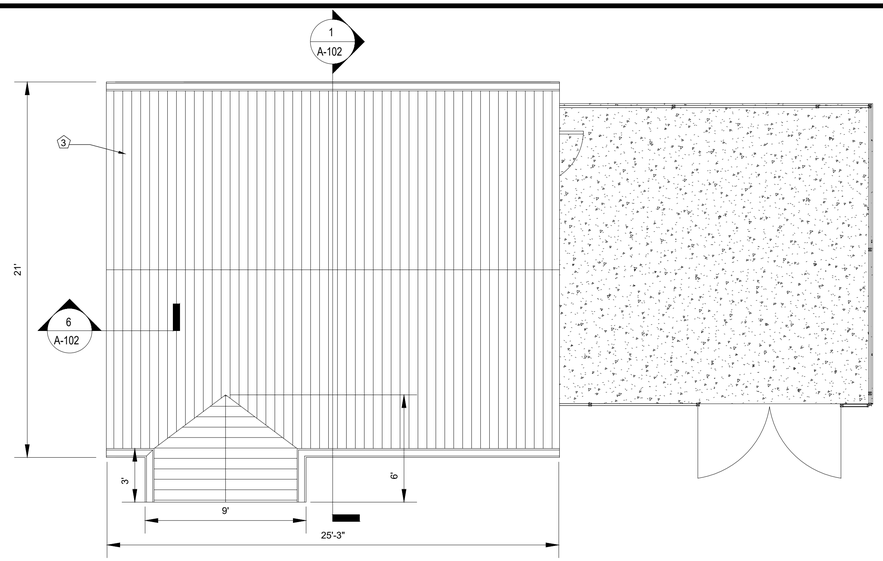

2 A-101 PUMPHOUSE ENLARGED ROOF PLAN
SCALE: 1/4" = 1'-0"

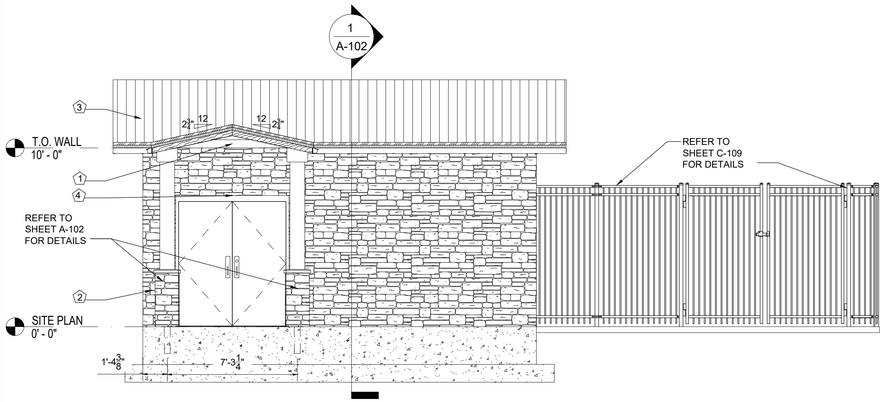

3 A-101 PUMPHOUSE SOUTH
SCALE: 1/4" = 1'-0"

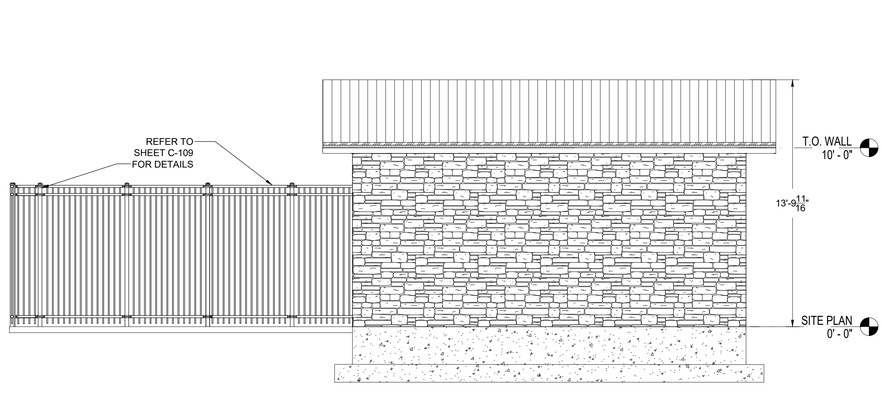

3 A-101 PUMPHOUSE NORTH
SCALE: 1/4" = 1'-0"

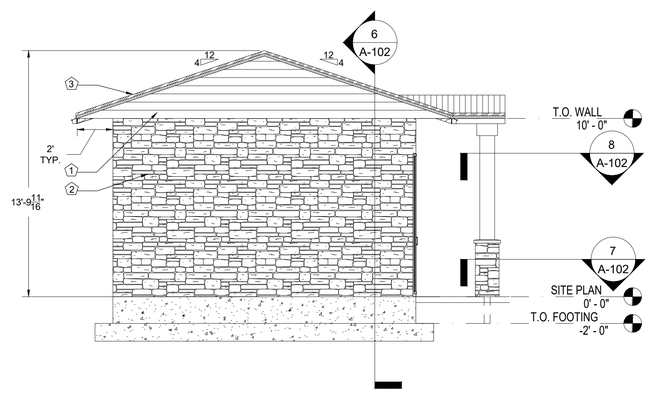

4 A-101 PUMPHOUSE WEST
SCALE: 1/4" = 1'-0"

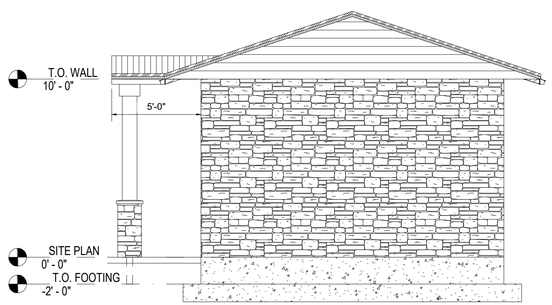

5 A-101 PUMPHOUSE EAST
SCALE: 1/4" = 1'-0"

GENERAL NOTES

1. SEE C-102 FOR SITE LAYOUT PLAN.
2. SEE C-104 FOR EQUIPMENT LAYOUT PLAN.
3. PLAN AND WIDTH ELEVATION DIMENSIONS ARE TO FACE OF FINISH.
4. HEIGHT ELEVATION DIMENSIONS ARE FROM FINISH FLOOR SURFACE.
5. CONTRACTOR SHALL FIELD VERIFY ALL DIMENSIONS.
6. PLAN DIMENSIONS ARE TO FACE OF STUD . CORNER OF MASONRY OR FACE OF CONCRETE UNLESS NOTED OTHERWISE. DO NOT SCALE DRAWINGS - USE DIMENSIONS.
7. PROVIDE AND INSTALL ADEQUATE BLOCKING BEHIND ALL WALL MOUNTED ITEMS INDICATED IN THESE DRAWINGS OR SPECIFICATIONS.
8. UNLESS OTHERWISE NOTED OR DIMENSIONED, ALL DOORS SHALL BE INSTALLED WITH A MINIMUM OF 12" CLEAR SPACE FROM EDGE OF DOOR TO NEAREST WALL OR OBSTRUCTION ON PUSH SIDE OF DOOR AND WITH MINIMUM OF 18" CLEAR SPACE FROM EDGE OF DOOR TO NEAREST WALL OR OBSTRUCTION ON PULL SIDE OF DOOR.

NOTE : THESE NOTES APPLY TO THIS SHEET ONLY.

KEY NOTES

(X)

1. WOOD SIDING- STAINED, REFER TO SPEC. SECTION 09 91 13.
2. STONE VENEER- REFER TO SPEC. SECTION 04 43 13.16.
3. STANDING-SEAM METAL ROOF- REFER TO SPEC. SECTION 07 41 13.16.
4. LINTEL ABOVE DOORS. SEE 2/A103
5. DOOR 003. SEE DOOR SCHEDULE ON A104 AND ELEVATION ON C110.

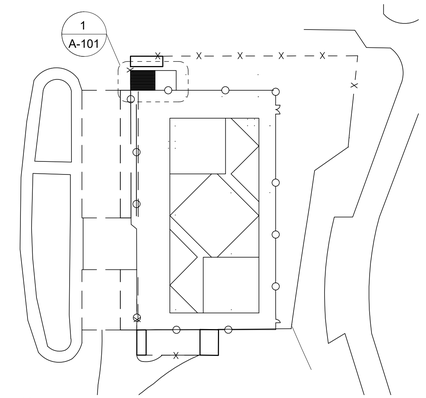

KEY PLAN

Hurst-Rosche, Inc.
SECRETARY OF STATE CONTROL NUMBER: 000602303
561 MURFREESBORO PIKE
NASHVILLE, TN
PH: 615.454.6615
www.hurst-rosche.com
HILLSBORO, IL
EAST ST. LOUIS, IL
MARION, IL
ARNOLD, MO
NEOSHO, MO

JEREMY D SARGENT
REGISTERED ARCHITECT
No. 106183
STATE OF TENNESSEE

SIGNATURE	08-16-2019
DATE	05-31-2020
LICENSE EXPIRES	

CEDARS OF LEBANON STATE PARK SPLASH PAD
STATE OF TENNESSEE, DEPARTMENT OF GENERAL SERVICES FOR
DEPARTMENT OF ENVIRONMENT AND CONSERVATION
LEBANON, WILSON COUNTY, TENNESSEE
SBC NO. 126/015-01-2018

MARK	DATE	DESCRIPTION

DATE: 08-16-2019
PROJECT NO: 360-3308

DESIGN:	DRAWN:	CHECK:
JDS	CDT	JLS

PUMPHOUSE ENLARGED PLANS, SOUTH AND WEST ELEVATIONS

A-101

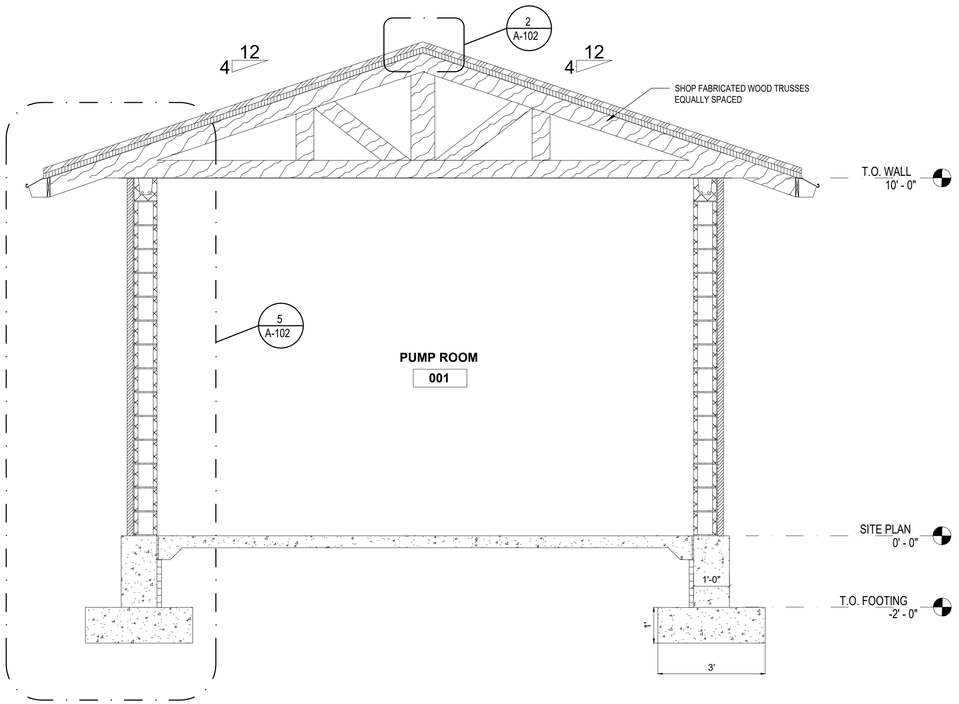

1 A-102 PUMPHOUSE BUILDING SECTION

SCALE: 1/2" = 1'-0"

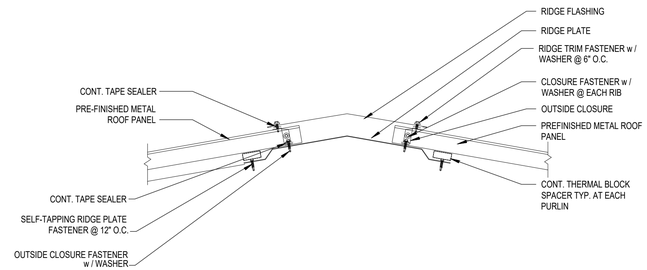

2 A-102 STANDING SEAM RIDGE DETAIL

SCALE: NOT TO SCALE

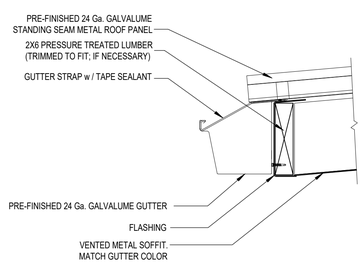

3 A-102 RAIN GUTTER

SCALE: NOT TO SCALE

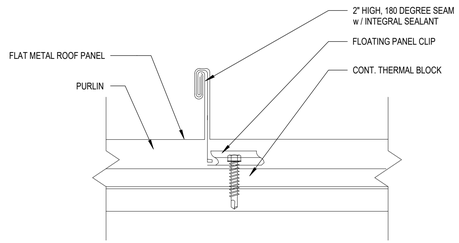

4 A-102 STANDING SEAM

SCALE: NOT TO SCALE

GENERAL NOTES

1. PLAN AND WIDTH ELEVATION DIMENSIONS ARE TO FACE OF FINISH.
2. HEIGHT ELEVATION DIMENSIONS ARE FROM FINISH FLOOR SURFACE.
3. CONTRACTOR SHALL FIELD VERIFY ALL DIMENSIONS.
4. SEE SPEC SECTION 07 21 13 FOR INFORMATION ON STANDING-SEAM METAL ROOF, GUTTERS AND DOWNSPOUTS AND SNOW GUARDS.
5. ALL PIPE VENTS SHALL EXTEND A MINIMUM OF 12 INCHES ABOVE THE ROOF SURFACE (SEE P-SHEETS FOR QUANTITIES AND LOCATIONS).
6. MAINTAINING DRAINAGE - IT SHALL BE THE RESPONSIBILITY OF THE CONTRACTOR TO MAINTAIN DRAINAGE FLOWS AT ALL TIMES DURING THE PERFORMANCE OF THE WORK. DAMAGE RESULTING FROM IMPROPER MAINTENANCE OF THE WORK. DRAINAGE SHALL BE IMMEDIATELY REPAIRED BY THE CONTRACTOR AT NO ADDITIONAL COST TO THE OWNER.

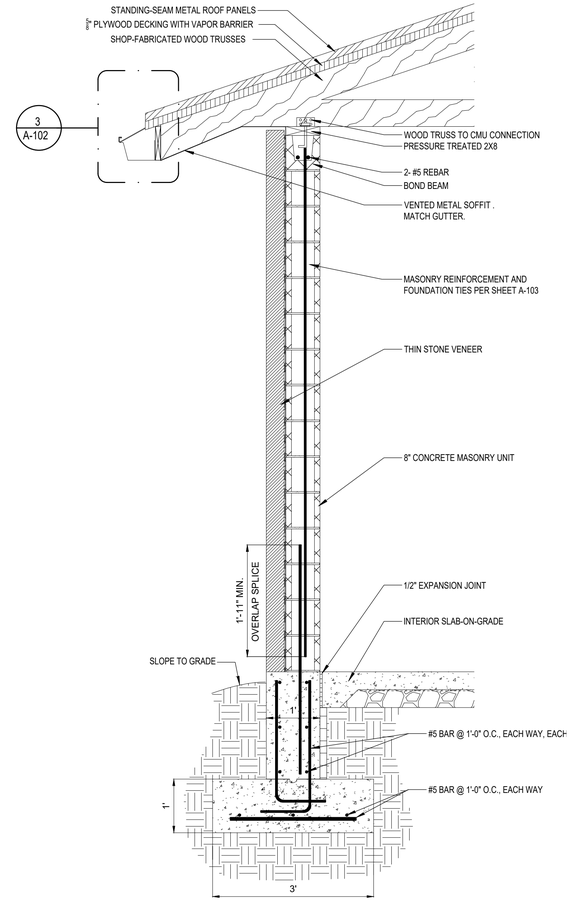

5 A-102 PUMPHOUSE NORTH WALL SECTION

SCALE: 3/4" = 1'-0"

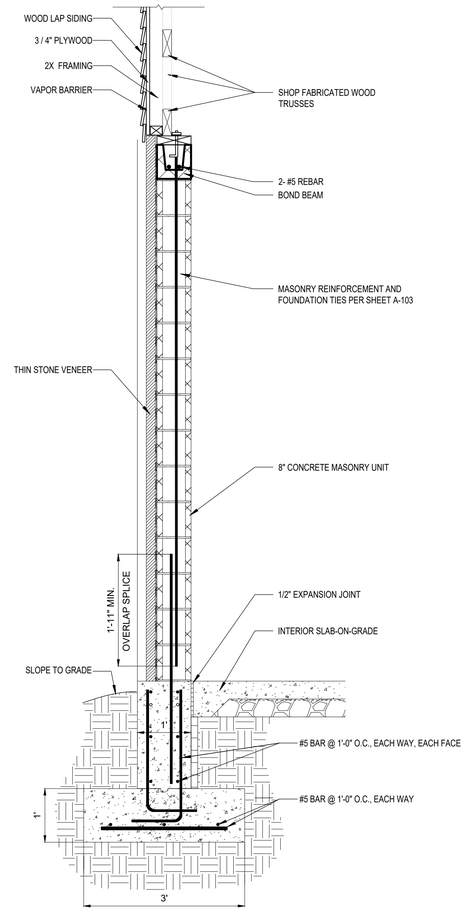

6 A-102 PUMPHOUSE WEST WALL SECTION

SCALE: 3/4" = 1'-0"

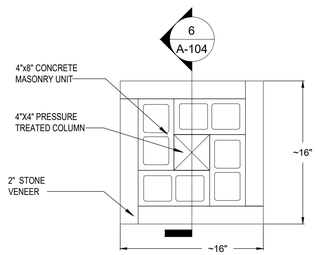

7 A-102 COLUMN PLAN AT STONE

SCALE: NOT TO SCALE

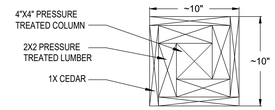

8 A-102 COLUMN PLAN AT CEDAR

SCALE: NOT TO SCALE

HR

Hurst-Rosche, Inc.

SECRETARY OF STATE CONTROL NUMBER: 000602303

561 MURFREESBORO PIKE
NASHVILLE, TN
PH: 615.454.6615
www.hurst-rosche.com

HILLSBORO, IL
EAST ST. LOUIS, IL
MARION, IL
ARNOLD, MO
NEOSHO, MO

JEREMY D SARGENT
REGISTERED ARCHITECT
No. 106183
STATE OF TENNESSEE

SIGNATURE 08-16-2019

DATE 05-31-2020

LICENSE EXPIRES

CEDARS OF LEBANON STATE PARK SPLASH PAD
STATE OF TENNESSEE, DEPARTMENT OF GENERAL SERVICES FOR
DEPARTMENT OF ENVIRONMENT AND CONSERVATION
LEBANON, WILSON COUNTY, TENNESSEE
SBC NO. 126/015-01-2018

MARK	DATE	DESCRIPTION

DATE: 08-16-2019

PROJECT NO: 360-3308

DESIGN:	DRAWN:	CHECK:
JDS	CDT	JLS

BUILDING SECTIONS, WALL SECTIONS AND ROOF DETAILS

A-102

1. DESIGN CRITERIA:

A. CODES AND STANDARDS

ALL DESIGN AND CONSTRUCTION WORK FOR THIS PROJECT SHALL CONFORM TO THE 2015 INTERNATIONAL BUILDING CODE.

B. LIVE LOAD DATA

ROOF....20 PSF
ALL LIVE LOADS NON-REDUCIBLE

C. WIND LOAD DATA

BASIC WIND SPEED....105 MPH
IMPORTANCE FACTOR....1.00
OCCUPANCY CATEGORY....I
EXPOSURE CLASSIFICATION...."C"
C AND C WIND DESIGN PRESSURE
WALLS....32 PSF
ROOFS....37 PSF

E. SEISMIC LOAD DATA

MAPPED SPECTRAL ACCELERATIONS
0.2 SECOND PERIOD (Ss)....0.251
1.0 SECOND PERIOD (S1)....0.128
SPECTRAL RESPONSE COEFFICIENTS
0.2 SECOND PERIOD (SDs)....0.267
1.0 SECOND PERIOD (SD1)....0.195
OCCUPANCY CATEGORY....I
SEISMIC IMPORTANCE FACTOR....1.0
SITE CLASS...."D"
SEISMIC DESIGN CATEGORY...."C"
ANALYSIS PROCEDURE....EQUIVALENT LATERAL FORCE
SEISMIC FORCE-RESISTING SYSTEM
N-S DIRECTION......A.9 ORDINARY REINFORCED MASONRY SHEAR WALLS
R = 2, Ωo = 2 1/2, Cd = 1 3/4
E-W DIRECTION......A.9 ORDINARY REINFORCED MASONRY SHEAR WALLS
R = 2, Ωo = 2 1/2, Cd = 1 3/4

F. SNOW LOAD DATA

SNOW EXPOSURE FACTOR....1.0
SNOW LOAD IMPORTANCE FACTOR....0.8
THERMAL EXPOSURE FACTOR....1.0
DESIGN SNOW LOAD....8 PSF
UNBALANCED SNOW LOAD....SEE TRUSS DIAGRAM

G. IN CASE OF CONFLICT BY GOVERNING CODES, THE MOST STRINGENT REQUIREMENT SHALL GOVERN.

2. FOUNDATIONS:

A. GENERAL

1. THE UPPER 6 INCHES OF ALL SLAB SUBGRADES, INCLUDING GRADE BEAMS, SHALL BE CONPACTED TO 95 PERCENT OR GREATER OF THE STANDARD PROCTOR MAXIMUM DRY DENSITY (ASTM D698) AND WITHIN 3 PERCENT OF THE OPTIMUM MOISTURE CONTENT IMMEDIATELY PRIOR TO PLACEMENT. ALL BACKFILL AROUND AND ABOVE ALL FOUNDATION ELEMENTS, CAPS, AND WALLS SHALL BE COMPACTED TO 95 PERCENT OF THE STANDARD PROCTOR MAXIMUM DRY DENSITY (ASTM D698) WITHIN 3 PERCENT OF THE OPTIMUM MOISTURE CONTENT. WELL-GRADED ADDREGATE LOCATED BENEATH FOOTINGS SHOULD BE COMPACTED TO 100 PERCENT OR GREATER OF THE STANDARD PROCTOR MAXIMUM DRY DENSITY (ASTM D698). COHESIVE FILL MATERIAL BENEATH FOOTINGS SHOULD BE COMPACTED TO 95 PERCENT OR GREATER OF THE STANDARD PROCTOR MAXIMUM DRY DENSITY (ASTM D698) AND WITH A MOISTURE CONTENT WITHIN 3 PERCENT OF THE OPTIMUM MOISTURE CONTENT.
2. ALL ORGANIC AND/OR OTHER UNSUITABLE MATERIALS SHALL BE REMOVED FROM BELOW GRADE BEAMS, FOOTINGS, SLABS, AND BACKFILL AREAS, AND THEM BACKFILLED WITH ACCEPTABLE GRANULAR FILL COMPACTED TO 100 PERCENT OR GREATER OF THE STANDARD PROCTOR MAXIMUM DRY DENSITY
3. (ASTM D698) OR COHESIVE SOIL MATERIAL COMPACTED TO 95 PERCENT OR GREATER OF THE STANDARD PROCTOR MAXIMUM DRY DENSITY (ASTM D698) AND WITH A MOISTURE CONTENT WITHIN 3 PERCENT OF THE OPTIMUM MOISTURE CONTENT.
3. THE CONTRACTOR SHALL PROVIDE ALL NECESSARY MEASURES TO PREVENT ANY WATER, FROST, OR ICE FROM PENETRATING ANY FOOTING, GRADE BEAM, OR STRUCTURAL SLAB SUBGRADE BEFORE AND AFTER PLACING OF CONCRETE AND UNTIL SUCH SUBGRADES ARE FULLY PROTECTED BY THE PERMANENT BUILDING STRUCTURE.
4. ALL SLABS-ON-GRADE SHALL BE PLACED OVER A CONTINUOUS VAPOR RETARDER OVER A MINIMUM OF 4 INCHES OF COMPACTED GRANULAR MATERIAL WHICH IS PLACED OVER A COMPACTED SOIL SUBGRADE.
5. GRADE BEAMS AND WALLS THAT RETAIN EARTH ON BOTH SIDES SHALL BE BACKFILLED ON BOTH SIDES SIMUTANEOUSLY.

B. FOOTINGS

1. SHALLOW FOOTINGS SHALL BEAR ON PREPARED SUBGRADE CAPABLE OF SUSTAINING A NET ALLOWABLE BEARING PRESSURE OF 1.5 KSF FOR CONTINOUS FOOTING UNDER FULL SERVICE LIVE AND DEAD LOAD.
2. FOOTINGS SHALL BE POURED INTO AN EARTH-FORMED TRENCH U.N.O.
3. ALL BEARING MATERIAL SHALL BE INSPECTED BY THE GEOTECHNICAL ENGINEER OR AUTHORIZED REPRESENTATIVE PRIOR TO CONCRETE PLACEMENT. THE GEOTECHNICAL ENGINEER SHALL BE THE SOLE JUDGE AS TO THE SUITABILITY OF THE BEARING MATERIAL. FOOTING ELEVATIONS SHALL BE ADJUSTED AS REQUIRED.
4. BOTTOM OF EXTERIOR FOOTINGS SHALL BEAR A MINIMUM OF 1'-6" BELOW FINAL EXTERIOR GRADE FOR FROST PROTECTION U.N.O.

3. CONCRETE:

A. NO CONCRETE SHALL BE POURED IN EXCAVATIONS CONTAINING WATER.

B. ALL CONSTRUCTION JOINTS SHOWN ON DRAWINGS SHALL BE INCORPORATED INTO THE STRUCTURE, UNLESS THEIR ELIMINATION IS APPROVED BY THE ARCHITECT. ADDITIONAL CONSTRUCTION JOINTS, REQUIRED TO FACILITATE CONSTRUCTION, SHALL BE LOCATED AT POINTS OF MINIMUM SHEAR AND SHALL BE DETAILED ON SHOP DRAWINGS. REINFORCEMENT SHALL PASS CONTINUOUSLY THROUGH THE JOINT.

C. UNLESS OTHERWISE SHOWN IN THE ARCHITECTURAL DRAWINGS, PROVIDE 3/4" CHAMFERS AT ALL EDGED THAT ARE EXPOSED TO VIEW IN THE FINISHED STRUCTURE.

D. SEE ARCHITECTURAL DRAWINGS FOR DOOR AND WINDOW OPENINGS, SLAB DEPRESSIONS, AND FOR MISCELLANEOUS EMBEDDED PLATES, BOLTS, ANCHORS, ANGLES, ETC.

E. REFER TO ARCHITECTURAL DRAWINGS FOR CONCRETE FINISHES. WHERE FINISH IS NOT SPECIFIED, CONFORM TO REQUIREMENTS OF ACI 301.

F. MECHANICAL, PLUMBING, AND ELECTRICAL DRAWINGS SHALL BE REFERRED TO FOR DRAINS, SLEEVES, OUTLET BOXES, CONDUIT, ANCHORS, ETC. THE VARIOUS TRADES ARE RESPONSIBLE FOR PLACING THEIR ITEMS.

G. REFER TO MECHANICAL DRAWINGS FOR HOUSKEEPING PADS AND INERTIA BASES AT MECHANICAL EQUIPMENT.

H. REFER TO PLUMBING DRAWINGS FOR UNDERFLOOR AND PERIMETER FOUNDATIONS DRAINS.

I. BASE PLATES, ANCHOR BOLTS, SUPPORT ANGLES, ETC., BELOW GRADE SHALL BE COATED WITH 1/8" OF MASTIC OR COVERED WITH A MINUMUM OF 3" CONCRETE.

J. ALL CONCRETE IS REINFORCED CONCRETE UNLESS SPECIFICALLY CALLED OUT AS "UNREINFORCED." REINFORCE ALL CONCRETE NOT OTHERWISE SHOWN WITH SAME REINFORCED STEEL AS IN SIMILAR SECTIONS OR AREAS.

K. AT ALL OPENINGS IN CONCRETE WALLS, SLABS, AND REENTRANT CORNERS, ADD 2-#5 BARS (OPENING DIMENSION PLUS 60 BAR DIAMETERS LONG) AT EACH OF THE FOUR SIDES, ALSO ADD 2-# 5 BARS 4'-0" LONG DIAGONAL AT EACH OF FOUR CORNERS. BAR LENGTHS SHALL EXTEND 2'-0" PAST OPENINGS EACH SIDE.

L. BARS MARKED CONTINUOUS AND ALL VERTICAL STEEL SHALL BE LAPPED 70 BAR DIAMETERS (2'-0" MIN.) AT SPLICES (UNLESS NOTED OTHERWISE ON DRAWINGS).

M. NO ALUMINUM ITEMS SHALL BE EMBEDDED IN CONCRETE.

N. ALL REINFORCEMENT SPACING ARE SHOWN TO CENTERLINE OF BARS UNLESS NOTED OTHERWISE.

O. PLACE REINFORCEMENT AS SHOWN. REFER TO NOTES BELOW FOR REINFORCEMENT NOT SHOWN:
1. CENTER ALL VERTICAL REINFORCEMENT IN WALL PANELS, FOUNDATIONS, AND FROST WALLS.
2. CENTER ALL WWR SLAB REINFORCEMENT AND DOWELS.

P. INTERIOR SLABS ON GRADE SHALL BE CONSTRUCTED AS A 4" NORMAL WEIGHT CONCRETE SLAB WITH 6X6 - W2.9XW2.9 W.W.R.

Q. THE SURFACE OF FOUNDATIONS AND SLABS THAT RECEIVE MASONRY CONSTRUCTIONS SHALL BE SLIGHTLY ROUGHENED. THE ROUGH FINISH SHALL BE A MINIMUM OF 1/8" UPSET.

4. REINFORCEMENT:

A. REINFORCING BARS SHALL HAVE THE FOLLOWING MINIMUM CONVERAGE. PLACE BARS AS NEAR TO THE CONCRETE SURFACE AS THESE MINIMUMS PERMIT WHEREVER POSSIBLE U.N.O.:

MIN. CONCRETE COVER	
CONCRETE POURED AGAINST EARTH	3"
FORMED CONCRETE IN CONTACT WITH EARTH	2"
FACE OF CONCRETE EXPOSED TO WEATHER	2"
SLABS AND WALLS	3/4"
BEAMS AND COLUMNS	1 1/2"

B. ALL LAP SPLICES ARE CLASS "B" LAP SPLICES, U.N.O.

C. REBAR BENDS SHALL BE MADE COLD. REBAR SHALL NOT BE BENT AFTER ANY PORTION OF THE BAR IS ENCASED IN CONCRETE.

D. ALL WALL FOOTING REINFORCEMENT SHALL BEND AROUND ALL CORNERS AND EXTEND 36 BAR DIAMETERS OR 18 INCHES WHICHEVER IS LARGER, U.N.O.

E. BARS SHALL BE FIRMLY SUPPORTED AND ACCURATELY PLACED AS REQUIRED BY THE A.C.I. STANDARDS, USING TIE AND SUPPORT BARS IN ADDITION TO REINFORCEMENT SHOWN WHERE NECESSARY FOR FIRM AND ACCURATE PLACING. PROVIDE DOWELS TO MATCH ALL REINFORCEMENT AT POUR JOINTS, U.N.O.. ALL DOWELS SHALL BE ACCURATELY SET IN PLACE BEFORE PLACING CONCRETE.

F. IN WALL REINFORCING, VERTICAL BARS SHALL BE PLACED CLOSEST TO THE WALL SURFACE, U.N.O.

G. DRAWINGS SHOW TYPICAL REINFORCING CONDITIONS. CONTRACTOR SHALL PREPARE DETAILED PLACEMENT DRAWINGS OF ALL CONDITIONS SHOWING QUANTITY, SPACING, SIZE, CLEARANCES, LAPS, INTERSECTIONS, AND COVERAGE REQUIRED BY STRUCTURAL DETAILS, APPLICABLE CODE, AND TRADE STANDARDS. CONTRACTOR SHALL NOTIFY REINFORCING INSPECTOR OF ANY ADJUSTMENTS FROM TYPICAL CONDITIONS WHICH ARE PROPOSED IN PLACEMENT DRAWINGS TO FACILITATE FIELD PLACEMENT OF REINFORCING STEEL AND CONCRETE.

H. NO WELDING OF REINFORCEMENT (INCLUDING TACK WELDING) SHALL BE DONE UNLESS SHOWN ON THE DRAWINGS OR APPROVED BY THE OWNER'S REPRESENTATIVE. WHERE SHOWN ON THE DRAWINGS, WELDING OF REINFORCING STEEL SHALL BE PERFORMED BY WELDERS SPECIFICALLY CERTIFIED FOR REINFORCING STEEL. USE E90XX ELECTRODES.

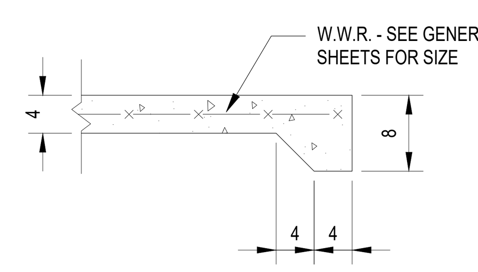

4 / A-103 TYPICAL THICKENED SLAB
SCALE: 3/4" = 1'-0"

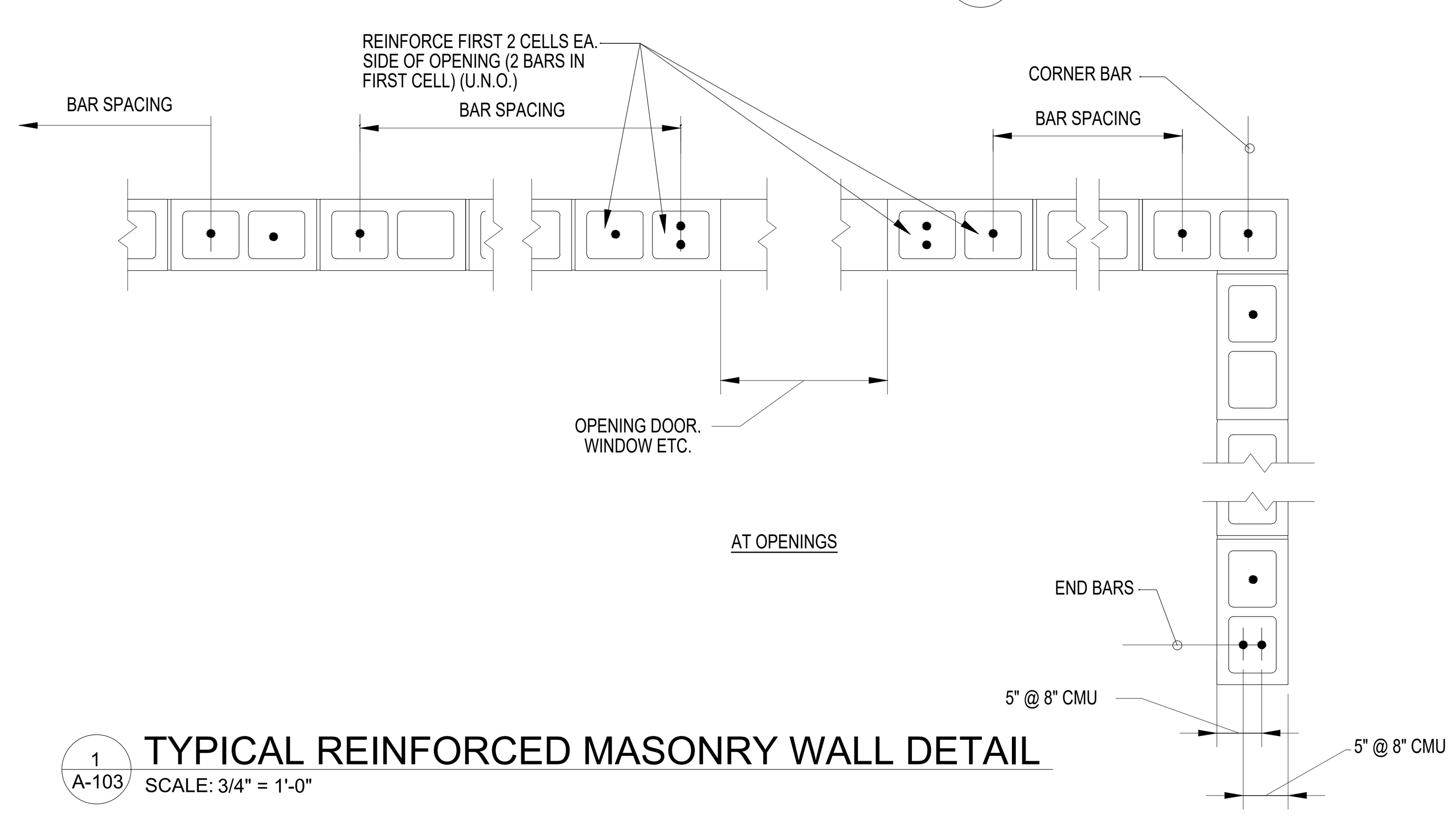

1 / A-103 TYPICAL REINFORCED MASONRY WALL DETAIL
SCALE: 3/4" = 1'-0"

5. PREFABRICATED WOOD TRUSSES:

1. TRUSSES TO BE DESIGNED & ERECTED IN CONFORMANCE W/ TRUSS PLATE INSTITUTE SPECIFICATIONS & RECOMMENDATIONS AND IN ACCORDANCE W/ BUILDING CODES.
2. TRUSSES TO BE BRACED DURING ERECTION. REFER TO TRUSS PLATE INSTITUTE "COMMENTARY AND RECOMMENDATIONS FOR BRACING WOOD TRUSSES" BWT-76.
3. TRUSSES TO BE DESIGNED FOR DEAD LOADS AND THE FOLLOWING LIVE LOADS UNLESS NOTED OTHERWISE:
   20 PSF TOP CHORD
   20 PSF BOTTOM CHORD
4. TRUSS MANUFACTURER IS TO SUBMIT LAYOUT PLANS & CALCULATIONS FOR ALL TRUSSES TO ENGINEER OF RECORD. THE CALCULATIONS ARE TO BEAR A TENNESSEE PROFESSIONAL ENGINEER'S SEAL. CALCULATIONS ARE TO SHOW LOADINGS, SPACING, STRESSES, CONFIGURATION, CONNECTIONS, GRADE OF LUMBER, CAMBER, BLOCKING, AND DEFLECTIONS.
5. IT SHALL BE THE ERECTOR'S RESPONSIBILITY TO SEE THAT JOISTS WHICH ARE DAMAGED, KINKED, BENT, OR WITH BROKEN CONNECTIONS, ARE NOT PLACED IN THE STRUCTURE.
6. DESIGN OF ROOF JOISTS AND BRIDGING SHALL CONSIDER A NET UPLIFT FROM WIND OF 25 PSF (LRFD).
7. CONTRACTOR TO HAVE WOOD SHIMS AVAILABLE FOR ANY NECESSARY JOISTS BEARING ELEVATION ADJUSTMENT.

6. REINFORCED MASONRY:

A. ALL WORK SHALL CONFORM TO RECOMMENDATIONS OF ACI 530 AND NCMA.

B. MASONRY ASSEMBLY STRENGTH SHALL BE 2,000 psi:
- f'_{cmu} SHALL BE 2,000 psi OR GREATER
- f'_{G} SHALL BE 2,500 psi OR GREATER
- MORTER TYPE SHALL BE TYPE S

C. REINFORCED MASONRY SHALL INCLUDE CMU.

D. SUBMIT REINFORCED MASONRY SHOP DRAWINGS FOR APPROVAL FOR ALL REINFORCED MASONRY. INCLUDE PLAN VIEW, ELEVATION VIEW, AND SECTION VIEW OF ALL REINFORCED MASONRY WALLS THAT ARE SHOWN ON THE STRUCTURAL DRAWINGS. INCLUDE LAYOUT OF ALL REINFORCEMENT ON SECTIONS AND ELEVATIONS.

E. DOWELS FROM CAST-IN-PLACE CONCRETE SHALL MATCH THE VERTICAL REINFORCEMENT IN THE WALL ABOVE UNLESS NOTED OTHERWISE. SUCH DOWELS SHALL BE FURNISHED BY THE CONCRETE CONTRACTOR.

F. REINFORCING ENTIRELY WITHIN THE MASONRY SHALL BE FURNISHED BY THE MASONRY CONTRACTOR.

G. WHEN A FOUNDATION DOWEL DOES NOT LINE UP WITH A VERTICAL BLOCK CORE, IT SHALL NOT BE SLOPED MORE THAN ONE HORIZONTAL IN 6 VERTICAL. DOWELS MAY BE GROUTED INTO A CELL IN VERTICAL ALIGNMENT, EVEN THOUGH IT IS IN AN ADJACENT CELL TO THE VERTICAL WALL REINFORCING, AS LONG AS THE CENTER-TO-CENTER SPACE BETWEEN THE WALL REINFORCING AND THE DOWEL DOES NOT EXCEED 5".

H. REINFORCING BARS SHALL HAVE A MINIMUM CLEARANCE OF 3/4 OF AN INCH FROM THE MASONRY AND 1 INCH TO ADJACENT BARS AND NOT LESS THAN ONE BAR DIAMETER BETWEEN BARS NOT SPLICED.

I. REINFORCING STEEL SHALL BE SECURELY IN PLACE AND INSPECTED BEFORE GROUTING STARTS.

J. GROUTING SHALL BE STOPPED 1 1/2" BELOW THE TOP OF A COURSE AND 1/2" BELOW THE TOP OF A BOND BEAM, SO AS TO FORM A KEY AT THE POUR JOIST.

K. GROUTING OF MASONRY BEAMS OVER OPENINGS SHALL BE DOWN IN ONE CONTINUOUS OPTERATION.

L. REFER TO ARCHITECTURAL DRAWINGS FOR LOCATIONS AND DETAILS OF DOOR AND WINDOW OPENINGS FOR SPECIAL COURSING AND OTHER MASONRY DETAILS. THE INFORMATION SHOWN ON THE STRUCTURAL DRAWINGS IS INTENDED TO DEFINE THE STRUCURAL REQUIREMENT ONLY.

M. ALL MASONRY WALLS TO BE REINFORCED HORIZONTALLY AND VERTICALLY IN ACCORDANCE WITH DRAWINGS AND SCHEDULE.

N. ALL REINFORCED CELLS SHALL BE GROUTED FULL.

O. ALL HORIZONTAL REINFORCEMENT SHALL BE CONTINUOUS AT CORNERS OF WALL AND AT ALL WALL INTERSECTIONS. HORIZONTAL REINFORCEMENT SHALL END WITH STANDARD HOOD ANCHORED AROUND VERTICAL REINFORCING BARS.

P. ALL WALL OPENINGS SHALL BE REINFORCED WITH A MINIMUM OF 1-#5 BAR ON ALL SIDES OF OPENING. REINFORCEMENT SHALL RUN CONTINUOUS FROM FLOOR TO TOP SUPPORT IN GROUTED CELLS. HORIZONTAL TOP AND BOTTOM BARS SHALL RUN CONTINUOUS ACROSS OPENING EXTENDING 2'-0" MIN. EACH SIDE IN A FULLY GROUTED BOND BEAM OR LINTEL BLOCK.

Q. EACH WALL CORNER AND WALL END SHALL BE VERTICALLY REINFORCED WITH MINIMUM OF ONE VERTICAL BAR MATCHING THE REINFORCEMENT SIZE AS GIVEN IN THE MASONRY REINFORCEMENT TABLE. REINFORCEMENT SHALL RUN CONTINUOUS THROUGH FULL WALL HEIGHT.

R. VERTICAL REINFORCEMENT TO BE CONTINUOUS THRU BOND BEAMS.

S. MASONRY VENEER ANCHORING - ATTACH VENEER TO BACKUP MASONRY WITH "SEISMICLIP" INTERLOCK SYSTEM. PROVIDE A MINIMUM OF ONE ANCHOR FOR EVERY 2.67 SQ. FT. OF WALL WITH A MAXIMUM OF 32" HORIZONTAL AND 25" VERTICAL SPACING.

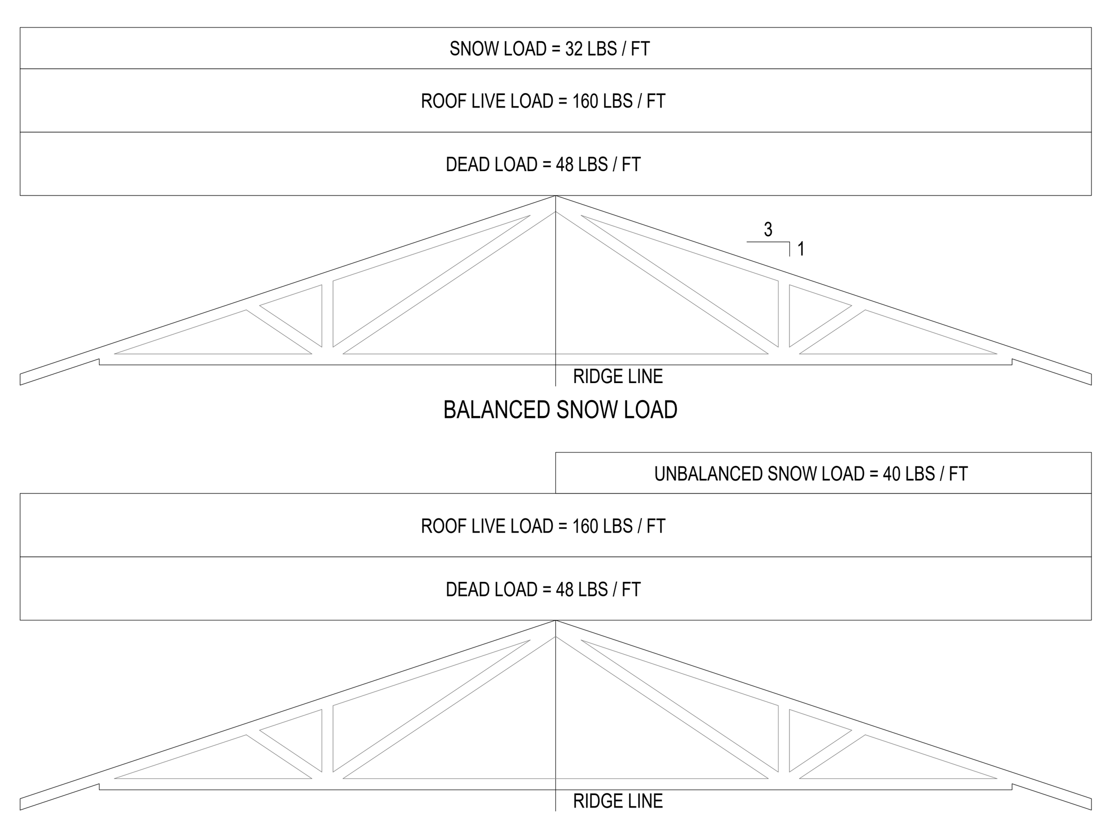

NOTE:
1. UNBALANCED SNOW LOAD MAY BE PLACED ON EITHER SIDE OF THE RIDGE LINE - TRUSS SHALL BE DESIGNED ACCORDINGLY.
2. TRUSSES SHALL BE SPACED EQUALLY BUT NOT TO EXCEED 4'-0" MAX O.C.

MASONRY REINFORCING SCHEDULE (U.N.O.)		
MASONRY	VERTICAL	HORIZONTAL
8" CMU	#5 @ 48" O.C.	EXTRA HEAVY LADDER JOINT REINF. @ 16" O.C.

NOTES TO REINFORCED MASONRY REINFORCING SCHEDULE:

1. STANDARD LADDER JOINT REINFORCEMENT TO HAVE 2-9 GAUGE SIDE RODS AND 9 GAUGE CROSS RODS @ 8" O.C.
2. CENTER ALL VERTICAL WALL REINFORCEMENT IN VOIDS.
3. PROVIDE HORIZONTAL LADDER REINFORCEMENT IN ALL CMU WALLS AT THE FOLLOWING LOCATIONS U.N.O.:
   A. FIRST AND SECOND BED JOINTS AT BOTTOM OF WALL.

REINFORCED MASONRY LINTEL SCHEDULE						
LINTEL	MAX. CLEAR SPAN	DEPTH	REINFORCING	SHEAR REINF.	MIN. BRG.	RE. DETAIL
L-1	6'-6"	16"	1 - #5 BAR	-	8"	2/A-103

NOTES TO REINFORCED MASONRY LINTEL SCHEDULE:

1. EXTEND REINFORCING 24" EACH SIDE OF OPENING (MINIMUM). WHERE SPACE IS NOT AVAILABLE DUE TO CORNERS, ETC., PROVIDE 18" HOOK UPWARD INTO CELL ADJACENT TO OPENINGS.
2. ALL CELLS SHALL BE FULLY GROUTED.
3. CONTROL JOINTS ARE NOT NECESSARY. IF USED, HORIZONTAL REINFORCEMENT SHALL PASS THRU JOINT.
4. WHERE LINTEL MARK IS NOT PROVIDED, PROVIDE LINTEL PER MAX CLEAR SPAN LISTED IN TABLE.

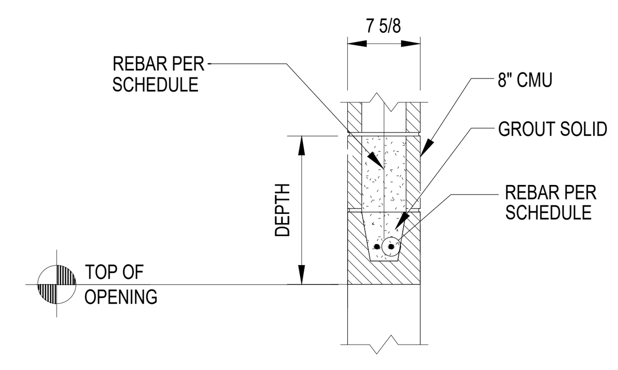

2 / A-103 LINTEL SECTION
SCALE: 3/4" = 1'-0"

STEEL LINTEL SCHEDULE				
MAX. MASONRY OPENING	NOMINAL WALL THICKNESS		MIN. BRG.	REMARKS
	VENEER	8"		
5'-0"	1 - L 4x4x5/16	2 - L 4x3 1/2x1/4	8"	SEE NOTES 1-5 (TYP)
6'-0"	1 - L 5x4x5/16	2 - L 5x3 1/2x1/4	8"	
8'-0"	1 - L 6x4x5/16	2 - L 6x3 1/2x1/4	8"	
10'-0"	1 - L 6x4x5/16	2 - L 6x3 1/2x5/16	8"	
12'-0"	1 - L 7x4x3/8	2 - L 7x4x3/8	8"	

NOTES TO STEEL LINTEL SCHEDULE:

1. THIS SCHEDULE APPLIES WHEN THE LINTEL OCCURS IN A NON-LOAD BEARING WALL OR WHEN DISTANCE TO STRUCTURAL BEARING ABOVE HEAD OF OPENING EXCEEDS 1/2 OF THE OPENING WIDTH.
2. INSTALL LINTELS LONG LEG VERTICAL.
3. DIMENSION OF VERTICAL LEG IS MIN., VERTICAL LEG MAY BE LONGER AT CONTRACTOR'S OPTION.
4. WHERE LINTELS OCCUR IN EXTERIOR WALLS, MIN. THICKNESS SHALL BE 5/16" AND LINTEL SHALL BE HOT DIP GALVANIZED.

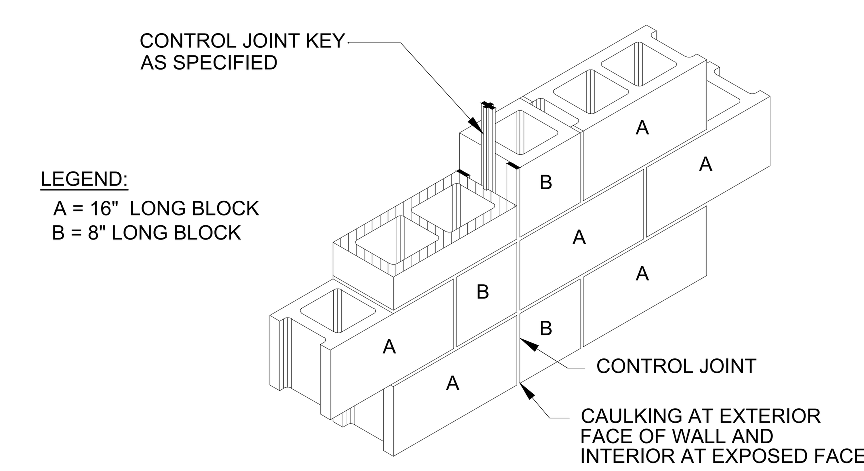

NOTES:
1. FIGURE ABOVE IS APPLICABLE TO THE CONSTRUCTION OF ALL CONTROL JOINTS IN 8" HOLLOW BLOCK WALLS.
2. CONTROL JOINT LOCATION PER ARCH DRAWINGS.

BOND BEAM REINFORCING SCHEDULE	
LOCATION	REINFORCING
STANDARD	2 - #5 CONTINUOUS

NOTES TO BOND BEAM REINFORCING SCHEDULE:

1. PROVIDE BOND BEAMS IN ALL CMU WALLS AT THE FOLLOWING LOCAITONS U.N.O.:
   A. AT THE TOP OF ALL WALLS
   B. AT ROOF ATTACHMENT LOCAITONS
   C. AT THE BOTTOM OF ALL WALL OPENINGS, EXTENDING 2 FEET (MIN.) PAST OPENING EACH SIDE.
   D. AT ADDITIONAL LOCATIONS SHOWN ON DRAWINGS.
   E. AT BEARING LOCATIONS

3 / A-103 BASIC CONTROL JT. FOR SINGLE WYTHE CMU MASONRY WALLS
SCALE: 1/2" = 1'-0"

Hurst-Rosche, Inc.
SECRETARY OF STATE CONTROL NUMBER: 000902303
561 MURFREESBORO PIKE
NASHVILLE, TN
PH: 615.454.6615
www.hurst-rosche.com
HILLSBORO, IL
EAST ST. LOUIS, IL
MARION, IL
ARNOLD, MO
NEOSHO, MO

JEREMY D SARGENT · REGISTERED ARCHITECT · AGRICULTURE · COMMERCE · No. 106183 · STATE OF TENNESSEE

SIGNATURE
08-16-2019
DATE
05-31-2020
LICENSE EXPIRES

CEDARS OF LEBANON STATE PARK SPLASH PAD
STATE OF TENNESSEE, DEPARTMENT OF GENERAL SERVICES FOR
DEPARTMENT OF ENVIRONMENT AND CONSERVATION
LEBANON, WILSON COUNTY, TENNESSEE
SBC NO. 126/015-01-2018

MARK	DATE	DESCRIPTION

DATE: 08-16-2019
PROJECT NO: 360-3308
DESIGN: JDS | DRAWN: CDT | CHECK: JLS

TRUSS CRITERIA AND DETAILS

A-103

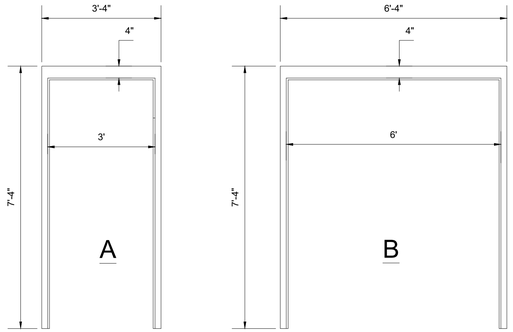

1 A-104 DOOR FRAME ELEVATION
SCALE: NOT TO SCALE

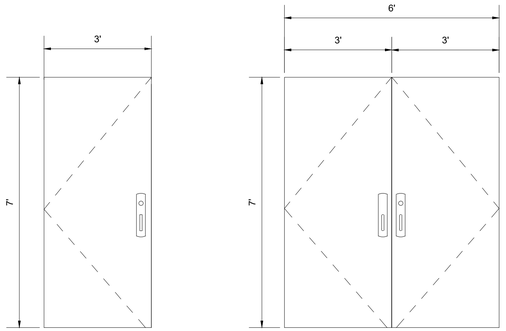

2 A-104 DOOR ELEVATION
SCALE: NOT TO SCALE

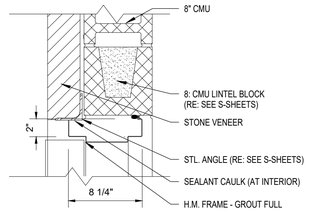

3 A-104 CMU W/ STONE VENEER - HEAD
SCALE: NOT TO SCALE

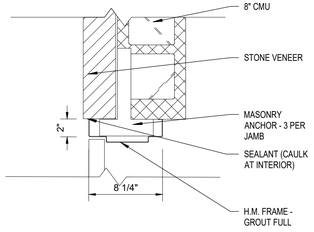

4 A-104 CMU W/ STONE VENEER - JAMB
SCALE: NOT TO SCALE

5 A-104 CMU W/ STONE VENEER - SILL
SCALE: NOT TO SCALE

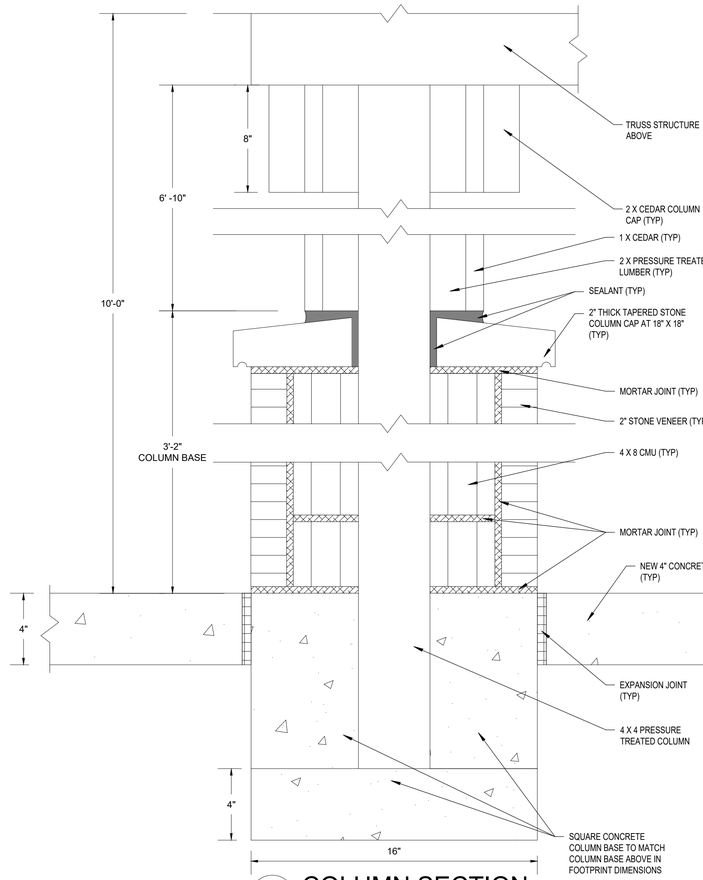

6 A-104 COLUMN SECTION
SCALE: NOT TO SCALE

DOOR SCHEDULE

Mark	Room #	Door Type	Width	Height	Material	Manufacturer	Finish	Description	Hardware #	Frame
001	001	B	6'- 0"	7'-0"	HM			Door-Passage-Double	1	B
002	001	A	3'- 0"	7'-0"	HM			Door-Passage-Single	1	A

1: REFER TO SPEC. SECTION 08-71-00 FOR HARDWARE.
2: REFER TO SPEC. SECTION 08-11-13 FOR DOORS AND FRAMES.

ROOM FINISH SCHEDULE

Room #	Room Name	Floor	Base	Wall Finish North	Wall Finish East	Wall Finish South	Wall Finish West	Ceiling Finish	Ceiling Height
001	PUMPHOUSE	CT-1	--	--	--	--	--	--	10'-0" *1

CT-1 SEALED CONCRETE

NOTES (*#) :
1. TO BOTTOM OF OPEN TRUSS

GENERAL NOTES

1. PLAN AND WIDTH ELEVATION DIMENSIONS ARE TO FACE OF FINISH.
2. HEIGHT ELEVATION DIMENSIONS ARE FROM FINISH FLOOR SURFACE.
3. CONTRACTOR SHALL FIELD VERIFY ALL DIMENSIONS.

Hurst-Rosche, Inc.
SECRETARY OF STATE CONTROL NUMBER: 000602303
561 MURFREESBORO PIKE
NASHVILLE, TN
PH: 615.454.6615
www.hurst-rosche.com
HILLSBORO, IL
EAST ST. LOUIS, IL
MARION, IL
ARNOLD, MO
NEOSHO, MO

JEREMY D SARGENT REGISTERED ARCHITECT PROFESSIONAL AGRICULTURE ENGINEER No. 106183 STATE OF TENNESSEE

SIGNATURE
DATE 08-16-2019
LICENSE EXPIRES 05-31-2020

CEDARS OF LEBANON STATE PARK SPLASH PAD
STATE OF TENNESSEE, DEPARTMENT OF GENERAL SERVICES FOR
DEPARTMENT OF ENVIRONMENT AND CONSERVATION
LEBANON, WILSON COUNTY, TENNESSEE
SBC NO. 126/015-01-2018

MARK	DATE	DESCRIPTION

DATE: 08-16-2019
PROJECT NO: 360-3308
DESIGN: JDS | DRAWN: CDT | CHECK: JLS

DOOR AND FRAME ELEVATIONS, SCHEDULES AND DETAILS

A-104

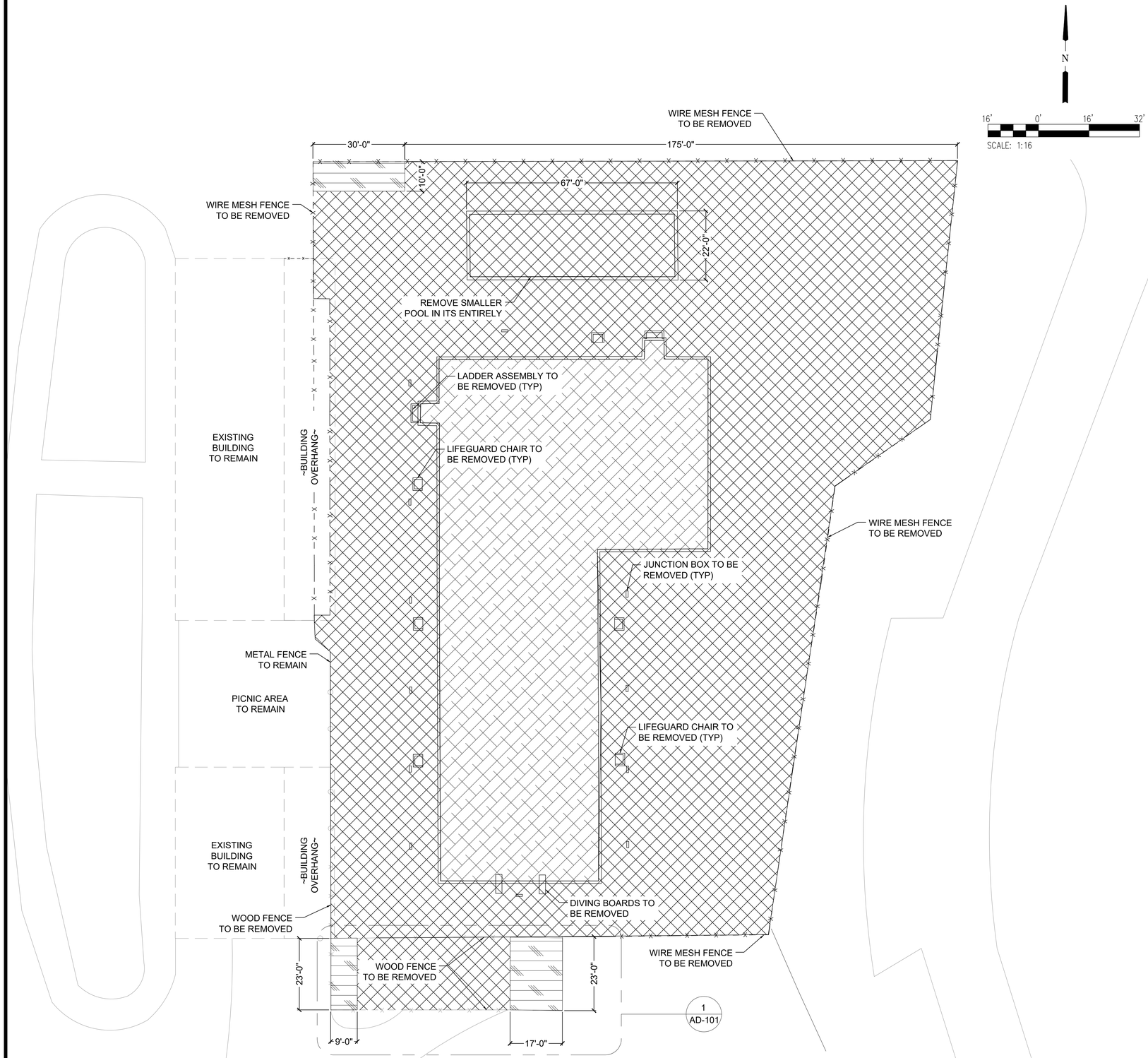

GENERAL NOTES:

1. THE CONTRACTOR IS RESPONSIBLE FOR CONSTRUCTION LAYOUT AND STAKING.
2. EXISTING INFORMATION INDICATED ON THIS SHEET IS TAKE FROM AVAILABLE EXISTING PLANS AND INFORMATION. CONTRACTOR SHALL ANTICIPATE MINOR DEVIATIONS FORM INFORMATION ON SHEET AND ACTUAL FIELD CONDITIONS. ANY MAJOR CONFLICTS IN THE EXISTING CONDITIONS SHALL BE BROUGHT TO THE ATTENTION OF THE A/E FOR FURTHER DIRECTION.
3. THE CONTRACTOR SHALL NOT BLOCK ANY ENTRANCES OR ROADWAYS NOT INCLUDED IN WORK. ALL ENTRANCES NOT IN CURRENT STAGE OF WORK SHOULD REMAIN OPEN AND AVAILABLE TO PARK RANGERS AND OFFICIAL AT ALL TIMES.
4. STATE PERMITS, LOCAL PERMITS, FEES AND LICENSES NECESSARY FOR THE PROCESSION OF WORK SHALL BE SECURED AND PAID FOR BY THE CONTRACTOR.
5. THE CONTRACTOR IS REQUIRED TO MEET "BUY AMERICA" CERTIFICATION REQUIREMENTS FOR ALL PRODUCTS USED ON THIS PROJECT.
6. THE CONTRACTOR WILL PERFORM COMPACTION AND CONCRETE TESTING IN ACCORDANCE WITH THE SPECIFICATIONS.
7. ALL CONCRETE MUST BE ACCOUNTED FOR WITH EIGHT TICKETS FROM EACH TRUCK. ALL CONCRETE USED MUST BE TESTED TO ENSURE PROPER PSI IS OBTAINED. RECORDS MUST BE RETAINED FOR THE TERM OF THE TERM OF THE PROJECT PLUS 3 YEARS AFTER THE PROJECT IS CONSIDERED FEDERALLY CLOSED.
8. ALL SAW CUTTING OF EXISTING PAVEMENT SHALL BE CONSIDERED INCIDENTAL TO THE CONTRACT. THE MINIMUM SAW CUT DEPTH IN THE PAVEMENT SHALL BE 4" UNLESS OTHERWISE SPECIFIED IN THE PLANS.
9. THE CONTRACTOR IS RESPONSIBLE FOR PREVENTING EROSION OF THE SOIL EXPOSED BY DISTURBANCE DUE TO HIS/HER OPERATIONS. CONSTRUCTION PROJECT MUST IMPLEMENT ALL PROPER EROSION AND SEDIMENT CONTROL MEASURES AND MEET ALL LOCAL, STATE AND FEDERAL REQUIREMENTS.
10. ABANDONED UNDERGROUND UTILITIES THAT CONFLICT WITH CONSTRUCTION SHALL BE DISPOSED OF OUTSIDE THE LIMITS OF OWNER PROPERTY ACCORDING TO ARTICLE 105.07 OF THE TN STANDARD SPECIFICATIONS AND AS DIRECTED BY THE ENGINEER. THIS WORK WILL NOT BE PAID FOR SEPARATELY BUT SHALL BE CONSIDERED INCIDENTAL OF THE CONTRACT.

DEMOLITION NOTES:

1. CONTRACTOR SHALL REMOVE THE EXISTING CONCRETE SUN DECK TO THE LIMITS INDICATED. CONTRACTOR SHALL REMOVE AL MATERIALS AND APPURTENANCES ASSOCIATED WITH THE SMALL POOL. THE VOIDS LEFT BY THE POOL SHALL BE FILLED WITH CLEAN, DEBRIS-FREE EARTH COMPACTED IN 6" LIFTS TO 95% COMPACTION. AREAS THAT ARE INDICATED FOR SEEDING SHALL BE FILLED TO AN ELEVATION THAT MATCHES THE ADJACENT SURROUNDING ELEVATIONS, AFTER THE EXISTING CONCRETE SUN DECK HAS BEEN REMOVED. AREAS THAT ARE INDICATED FOR NEW SHALL BE FILLED TO AN ELEVATION THAT SHALL BE REQUIRED TO RECEIVE 4" COMPACTED GRANULAR FILL AND 4" OF CONCRETE SUNDECK AT THE ELEVATIONS REQUIRED.
2. THE CONTRACTOR SHALL BE RESPONSIBLE FOR REPAIRING AND REPLACING ANY EXISTING ITEMS INDICATED TO REMAIN THAT ARE DAMAGED DURING DEMOLITION ACTIVITIES. THE COST OF WHICH SHALL BE INCIDENTAL TO THE COST OF CONSTRUCTION.
3. INCLUDE REMOVAL OF AGGREGATE BASE UNDERNEATH EXISTING CONCRETE DECK IN AREA TO RECEIVE SEEDING.

LEGEND

- EXISTING CONCRETE DECK TO BE REMOVED
- FLOOR OF POOL TO BE REMOVED & BACKFILLED
- EXISTING PUMPING STRUCTURE, FENCING AND EQUIPMENT TO BE REMOVED
- EXISTING FENCE TO BE REMOVED
- EXISTING FENCE TO REMAIN

Hurst-Rosche, Inc.
SECRETARY OF STATE CONTROL NUMBER: 000902303
561 MURFREESBORO PIKE
NASHVILLE, TN
PH: 615.454.6615
www.hurst-rosche.com
HILLSBORO, IL
EAST ST. LOUIS, IL
MARION, IL
ARNOLD, MO
NEOSHO, MO

JAMES L. SHEPERT
REGISTERED ENGINEER
PROFESSIONAL
AGRICULTURE
ENGINEER
No. 119912
STATE OF TENNESSEE

SIGNATURE
08-16-2019
DATE
05-31-2020
LICENSE EXPIRES

CEDARS OF LEBANON STATE PARK SPLASH PAD
STATE OF TENNESSEE, DEPARTMENT OF GENERAL SERVICES FOR
DEPARTMENT OF ENVIRONMENT AND CONSERVATION
LEBANON, WILSON COUNTY, TENNESSEE
SBC NO. 126/015-01-2018

MARK	DATE	DESCRIPTION

DATE: 08-16-2019
PROJECT NO: 360-3308

DESIGN:	DRAWN:	CHECK:
MWL	MWL	JLS

SITE DEMOLITION PLAN

C-101

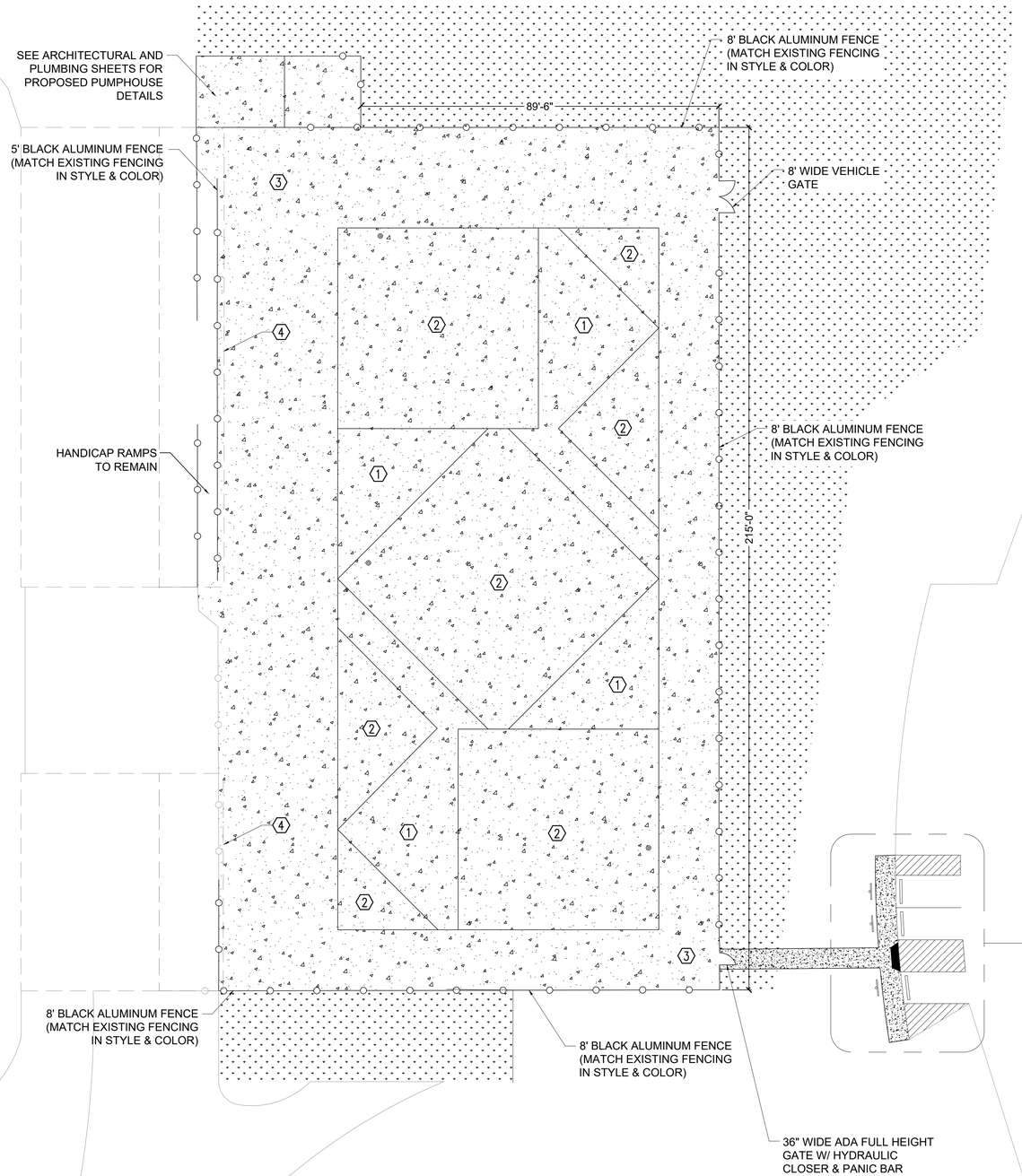

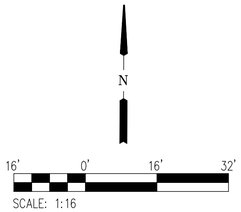

NOTES:

1. CONTRACTOR SHALL PROVIDE CONCRETE SPLASH PAD AND SUN DECK AS INDICATED.
2. ALL CONCRETE MUST BE ACCOUNTED FOR WITH WEIGHT TICKETS FROM EACH TRUCK. ALL CONCRETE USED MUST BE TESTED TO ENSURE PROPER PSI IS OBTAINED. RECORDS MUST BE RETAINED FOR THE TERM OF THE PROJECT PLUS 3 YEARS AFTER THE PROJECT IS CONSIDERED FEDERALLY CLOSED.
3. SEE "E" SHEETS FOR ASSOCIATED ELECTRICAL INFORMATION.
4. CONTRACTOR TO VERIFY ALL DIMENSION PRIOR TO BIDDING.
5. NEW PUMP BUILDING FLOORS TO RECEIVE SLIP RESISTANT AGGREGATE FINISH.

CONCRETE NOTES:

1. CONCRETE TO BE 4" MINIMUM POUR, BROOM FINISH.
2. CONCRETE PAD TO HAVE 3/8" REBAR @ 18" O.C. OR WIRE MESH, TYP.
3. SLOPE PAD TOWARDS DRAINS @ 1/4" PER 1'-0".

LEGEND

PROPOSED 4" CONCRETE DECK (4" ON GRANULAR FILL) W/ COATING FINISH (SEE KEYED NOTES)

PROPOSED 4" SIDEWALK (4" ON GRANULAR FILL)

INSTALL FILL, GRADE TO DRAIN AND SEED & STRAW

PROPOSED BLACK METAL FENCE (MATCH EXISTING FENCE IN STYLE AND COLOR)

KEYED NOTES

1. "WET ZONE" MMA COATING SYSTEM AS PER SPEC 09 69 50.
2. ALT BID 1 - POURED-IN-PLACE RUBBER SURFACING AS PER SPEC 09 69 50 IN LIEU OF KEYED 1.
3. ALT BID 2 - COOL FEEL COATING SYSTEM AS PER SPEC 09 69 50.
4. ALT BID 4 - EPOXY CONCRETE COATING APPLIED TO DECK WALL AS PER SPEC 09 69 50.

HR
Hurst-Rosche, Inc.
SECRETARY OF STATE CONTROL NUMBER: 000602303
561 MURFREESBORO PIKE
NASHVILLE, TN
PH: 615.454.6615
www.hurst-rosche.com
HILLSBORO, IL
EAST ST. LOUIS, IL
MARION, IL
ARNOLD, MO
NEOSHO, MO

JAMES L SHEPHERT
REGISTERED ENGINEER
DEPARTMENT OF AGRICULTURE
COMMERCE
No. 119913
STATE OF TENNESSEE

SIGNATURE
DATE 08-16-2019
LICENSE EXPIRES 04-30-2021

CEDARS OF LEBANON STATE PARK SPLASH PAD
STATE OF TENNESSEE, DEPARTMENT OF GENERAL SERVICES FOR
DEPARTMENT OF ENVIRONMENT AND CONSERVATION
LEBANON, WILSON COUNTY, TENNESSEE
SBC NO. 126/015-01-2018

MARK	DATE	DESCRIPTION

DATE: 08-16-2019
PROJECT NO: 360-3308

DESIGN:	DRAWN:	CHECK:
MWL	MWL	JLS

SITE LAYOUT PLAN

C-102

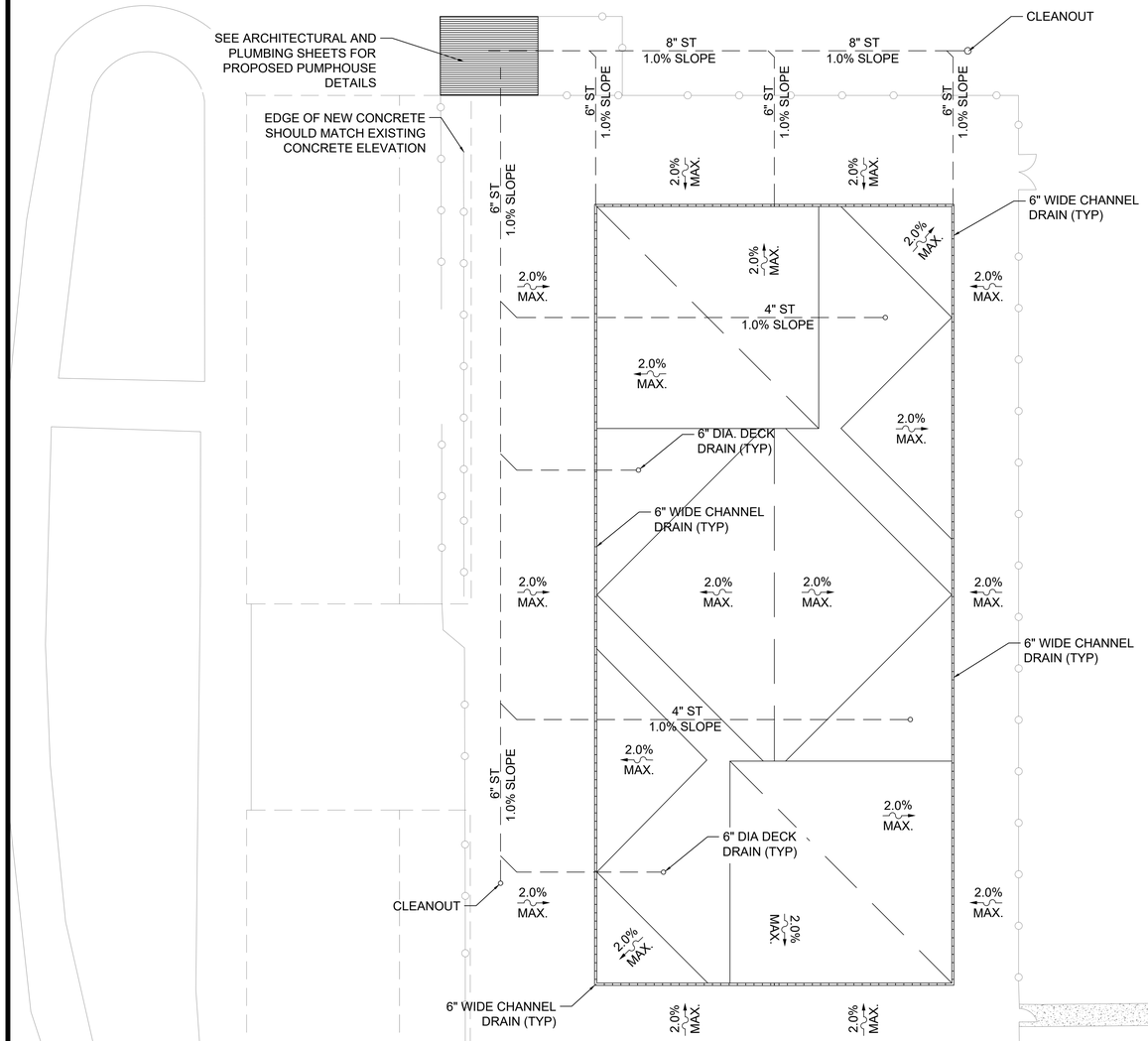

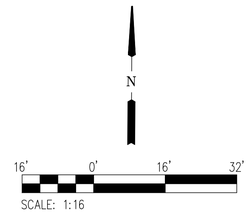

GENERAL NOTES:

1. SEE SPECIFICATION SECTION 22 11 00 FOR AREA DRAIN INFORMATION.
2. SEE SHEET C-108 FOR TRENCH DRAIN DETAILS.

Hurst-Rosche, Inc.
SECRETARY OF STATE CONTROL NUMBER: 000902303
561 MURFREESBORO PIKE
NASHVILLE, TN
PH: 615.454.6615
www.hurst-rosche.com
HILLSBORO, IL
EAST ST. LOUIS, IL
MARION, IL
ARNOLD, MO
NEOSHO, MO

JAMES L SIEFERT
REGISTERED ENGINEER
STATE OF TENNESSEE
No. 119913

SIGNATURE
DATE 08-16-2019
LICENSE EXPIRES 05-31-2020

CEDARS OF LEBANON STATE PARK SPLASH PAD
STATE OF TENNESSEE, DEPARTMENT OF GENERAL SERVICES FOR
DEPARTMENT OF ENVIRONMENT AND CONSERVATION
LEBANON, WILSON COUNTY, TENNESSEE
SBC NO. 126/015-01-2018

MARK	DATE	DESCRIPTION

DATE: 08-16-2019
PROJECT NO: 360-3308

DESIGN:	DRAWN:	CHECK:
MWL	MWL	JLS

FINISH GRADING PLAN

C-103

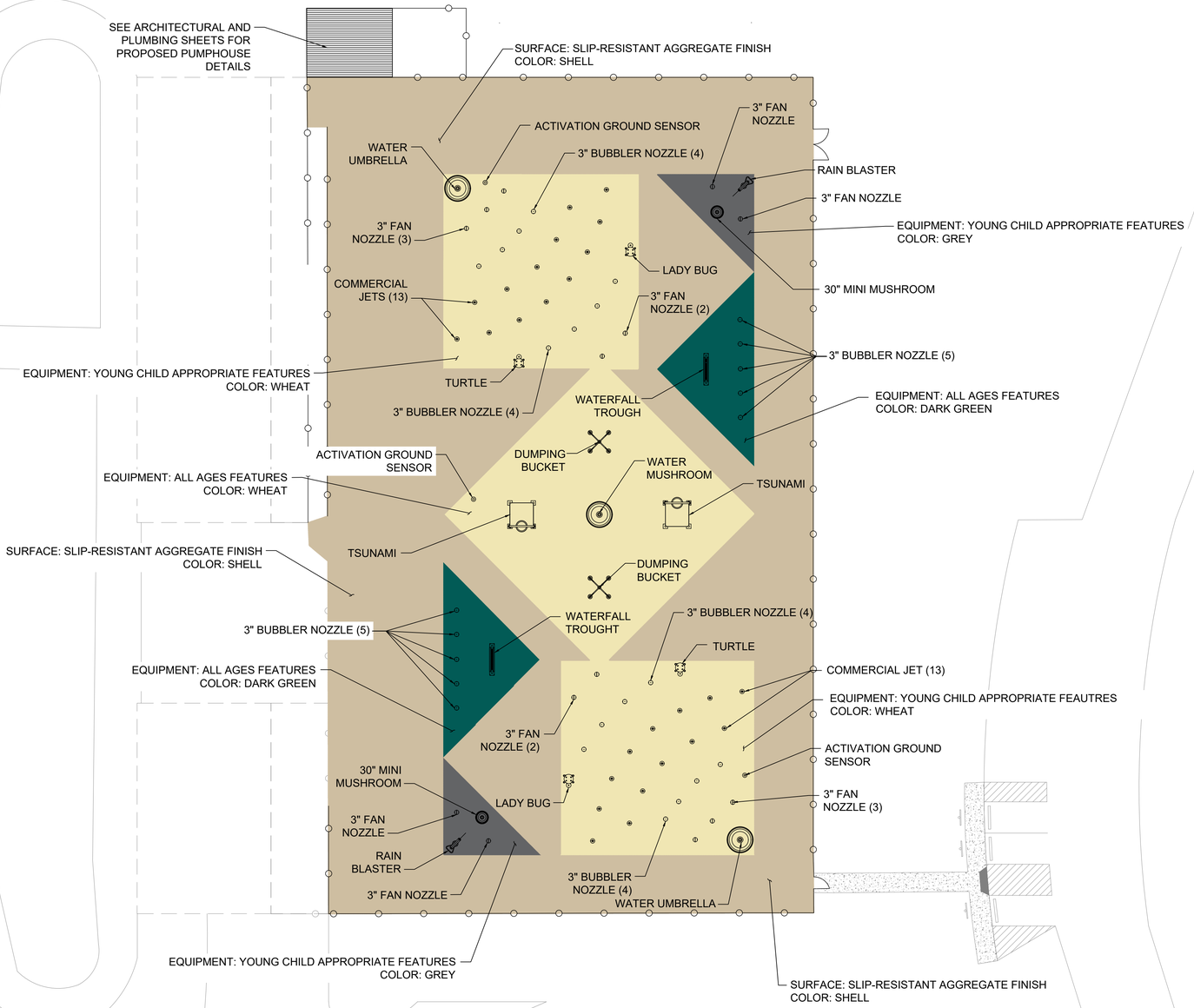

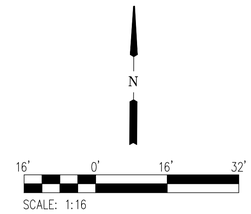

PERFORMANCE NOTES:

1. FLOOR FITTING HOLES SHALL NOT EXCEED 5/16".
2. ALL NOZZLE AND EQUIPMENT SHOULD MEET THE MANUFACTURERS RECOMMENDED FLOW RATES. NOZZLE VELOCITY SHALL NOT EXCEED 25 GALLONS PER MINUTES.
3. IN-GROUND NOZZLES SHALL BE FLUSH MOUNTED WITH FINAL DECK POUR SO AS NOT PROTRUDE ABOVE THE FINISHED SPLASH PAD.

Hurst-Rosche, Inc.
SECRETARY OF STATE CONTROL NUMBER: 000902303
561 MURFREESBORO PIKE
NASHVILLE, TN
PH: 615.454.6615
www.hurst-rosche.com
HILLSBORO, IL
EAST ST. LOUIS, IL
MARION, IL
ARNOLD, MO
NEOSHO, MO

JAMES L SIEFERT
REGISTERED ENGINEER
No. 119912
STATE OF TENNESSEE
DEPARTMENT OF AGRICULTURE
COMMERCE

SIGNATURE
08-16-2019
DATE
05-31-2020
LICENSE EXPIRES

CEDARS OF LEBANON STATE PARK SPLASH PAD
STATE OF TENNESSEE, DEPARTMENT OF GENERAL SERVICES FOR
DEPARTMENT OF ENVIRONMENT AND CONSERVATION
LEBANON, WILSON COUNTY, TENNESSEE
SBC NO. 126/015-01-2018

MARK	DATE	DESCRIPTION

DATE: 08-16-2019
PROJECT NO: 360-3308

DESIGN:	DRAWN:	CHECK:
MWL	MWL	JLS

EQUIPMENT LAYOUT PLAN

C-104

AS THE DESIGN ENGINEER RESPONSIBLE FOR THE DEVELOPMENT OF THESE PLANS, I DO HEREBY CERTIFY THAT THIS DEVELOPMENT WILL DISTURB LESS THAN ONE (1) ACRE AND A N.O.I. HAS BEEN FILED WITH THE STATE OF TENNESSEE, TNR _____

_____
SIGNATURE DATE

I HEREBY CERTIFY THAT I AM THE EROSION PREVENTION AND SEDIMENT CONTROL SPECIALIST FOR THIS PROJECT, UNTIL AN ALTERNATE IS DESIGNATED BY THE CONTRACTOR:

_____
SIGNATURE DATE

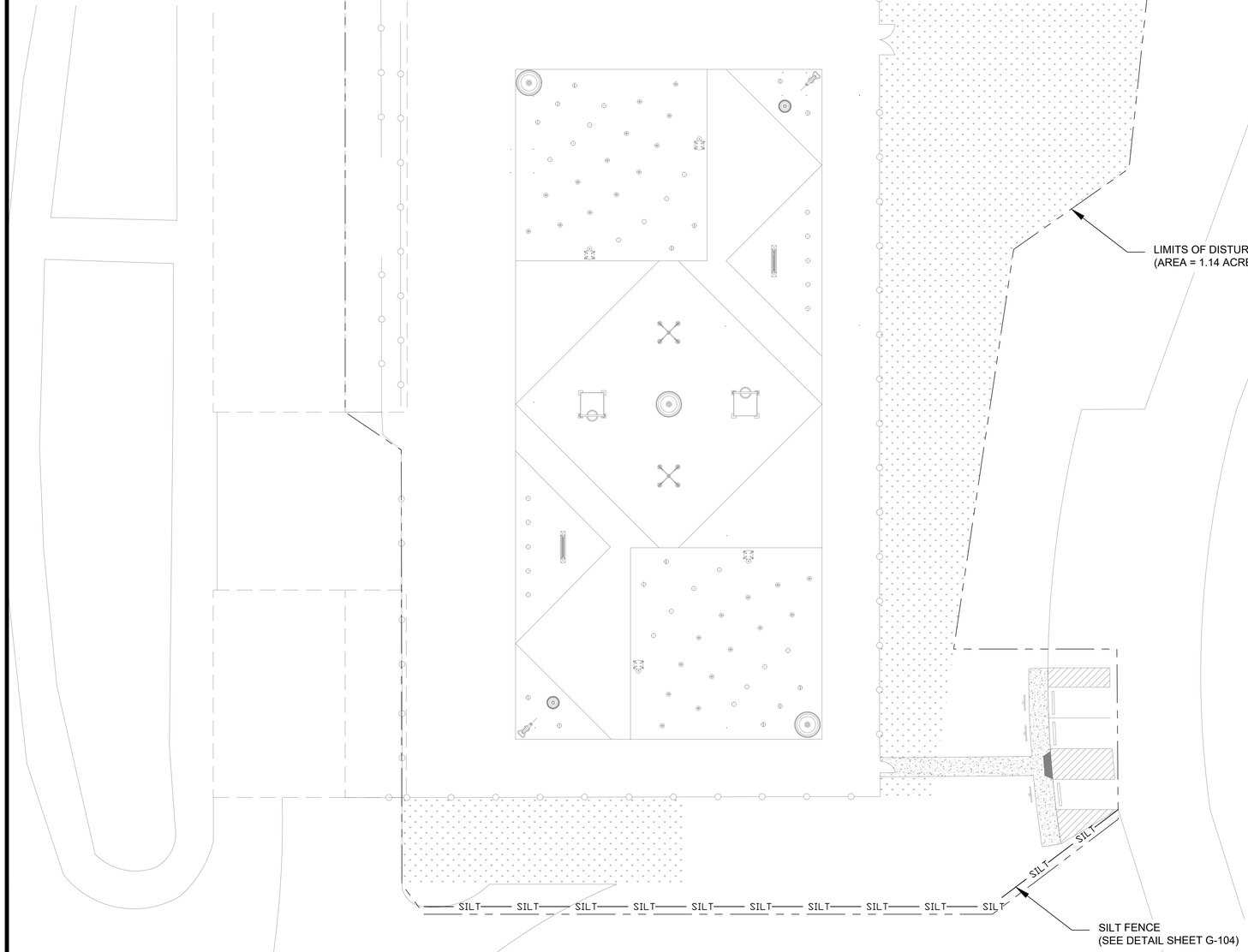

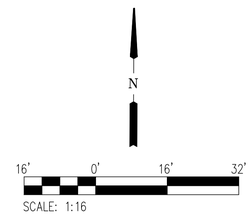

EROSION CONTROL NOTES:

1. TOTAL SITE AREA: 1.14 ACRES
2. SOIL STABILIZATION MUST BE IN PLACE WITHIN 14 DAYS (7 DAYS FOR SLOPES OF 35% OR GREATER) OF THE END OF THE CONSTRUCTION PHASE.
3. FIELD INSPECTIONS OF OUTFALLS/EPSC MUST BE MEASURED AT LEAST TWICE WEEKLY AND AT LEAST 72 HOURS PART.
4. ANY DAMAGED, MISSING OR BROKEN EPSC, VEGETATION AND OTHER PROTECTIVE MEASURE MUST BE REPAIRED OR REPLACED WITH 7 CALENDAR DAYS.

LEGEND

SILT — PERIMETER EROSION BARRIER

LIMITS OF DISTURBANCE

Hurst-Rosche, Inc.
SECRETARY OF STATE CONTROL NUMBER: 000602303
561 MURFREESBORO PIKE
NASHVILLE, TN
PH: 615.454.6615
www.hurst-rosche.com
HILLSBORO, IL
EAST ST. LOUIS, IL
MARION, IL
ARNOLD, MO
NEOSHO, MO

JAMES L SIEFERT REGISTERED ENGINEER No. 119913 STATE OF TENNESSEE AGRICULTURE COMMERCE

SIGNATURE
DATE 08-16-2019
LICENSE EXPIRES 05-31-2020

CEDARS OF LEBANON STATE PARK SPLASH PAD
STATE OF TENNESSEE, DEPARTMENT OF GENERAL SERVICES FOR
DEPARTMENT OF ENVIRONMENT AND CONSERVATION
LEBANON, WILSON COUNTY, TENNESSEE
SBC NO. 126/015-01-2018

MARK	DATE	DESCRIPTION

DATE: 08-16-2019
PROJECT NO: 360-3308

DESIGN:	DRAWN:	CHECK:
MWL	MWL	JLS

INITIAL/FINAL EPSC PLAN

C-105

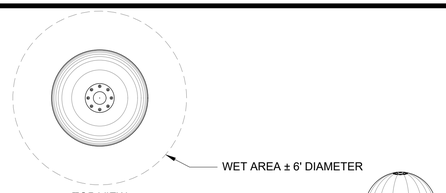

SPECIFICATIONS:
- MATERIAL: PVC & FIBERGLASS
- SURFACE FINISH: UV RESISTANT AUTOMOTIVE PAINT
- WATER PRESSURE: MIN. 5 PSI
- WATER CONSUMPTION: 5-15 GPM
- EFFECTIVE RANGE: 72" - 84" DIA.

30" MINI MUSHROOM

FRONT VIEW

30" MINI MUSHROOM

SCALE: N.T.S.

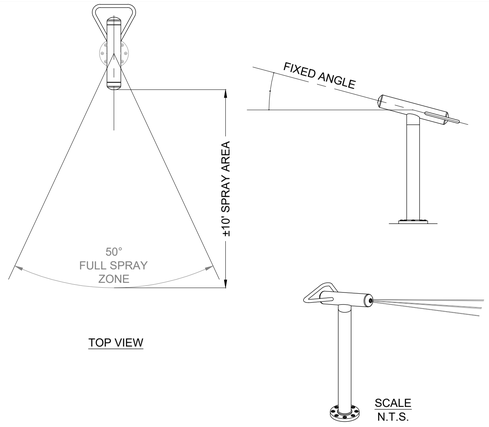

SPECIFICATIONS:
- MATERIAL: STAINLESS STEEL
- SURFACE FINISH: POWDER COAT OR POLISHED SURFACE
- WATER PRESSURE: MIN. 5 PSI
- WATER CONSUMPTION: 5-15 GPM
- WET AREA: ±6' - 8' DIRECTIONAL

SS RAIN BLASTER

SS RAIN BLASTER

SCALE: N.T.S.

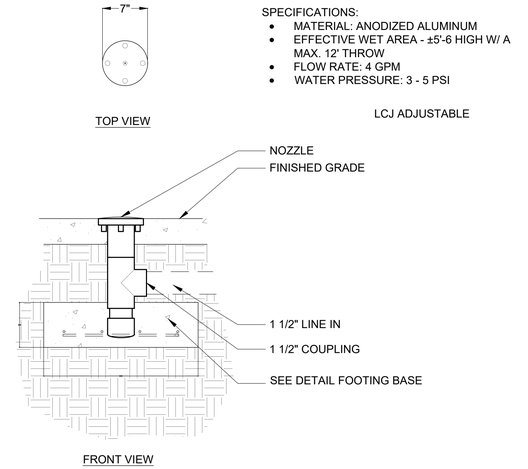

INCLUDE:
- STAINLESS STEEL BOLTS AND GASKET

SPECIFICATIONS:
- MATERIAL: ANODIZED ALUMINUM
- EFFECTIVE WET AREA - ±5'-6 HIGH W/ A MAX. 12' THROW
- FLOW RATE: 4 GPM
- WATER PRESSURE: 3 - 5 PSI

LCJ ADJUSTABLE

LARGE COMMERCIAL NOZZLE

SCALE: N.T.S.

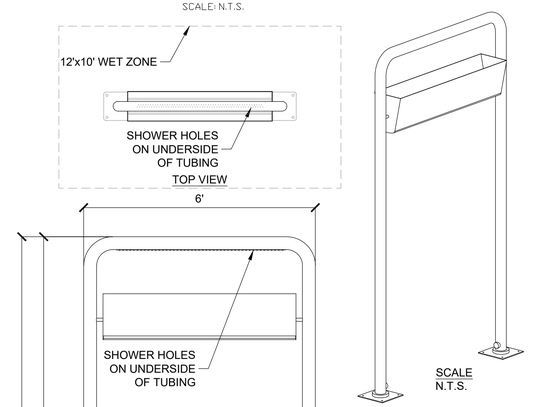

SPECIFICATIONS:
- MATERIAL: STAINLESS STEEL
- SURFACE FINISH: POWDER COAT
- WATER PRESSURE: MIN. 5 PSI
- WATER CONSUMPTION: 10-60 GPM

SS WATERFALL TROUGH

SS WATERFALL TROUGH

SCALE: N.T.S.

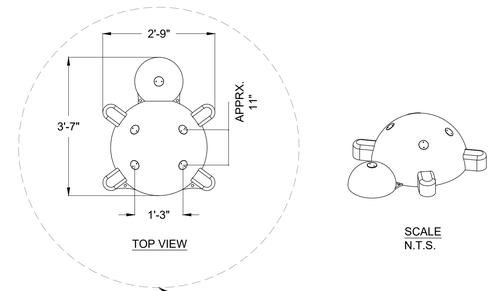

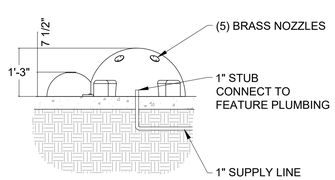

SPECIFICATIONS:
- MATERIAL: FIBERGLASS w/ BRASS NOZZLES
- SURFACE FINISH: UV RESISTANT AUTOMOTIVE PAINT
- WATER PRESSURE: MIN. 10 PSI
- WATER CONSUMPTION: 7-8 GPM
- EFFECTIVE RANGE: 16' DIA.

TURTLE OR
LADY BUG

TURTLE/ LADY BUG

SCALE: N.T.S.

Hurst-Rosche, Inc.
SECRETARY OF STATE CONTROL NUMBER: 000902303
561 MURFREESBORO PIKE
NASHVILLE, TN
PH: 615.454.6615
www.hurst-rosche.com
HILLSBORO, IL
EAST ST. LOUIS, IL
MARION, IL
ARNOLD, MO
NEOSHO, MO

JAMES L SIEBERT
REGISTERED ENGINEER
No. 119912
STATE OF TENNESSEE

SIGNATURE
08-16-2019
DATE
04-30-2021
LICENSE EXPIRES

CEDARS OF LEBANON STATE PARK SPLASH PAD
STATE OF TENNESSEE, DEPARTMENT OF GENERAL SERVICES FOR
DEPARTMENT OF ENVIRONMENT AND CONSERVATION
LEBANON, WILSON COUNTY, TENNESSEE
SBC NO. 126/015-01-2018

MARK	DATE	DESCRIPTION

DATE: 08-16-2019
PROJECT NO: 360-3308

DESIGN:	DRAWN:	CHECK:
MWL	MWL	JLS

SPLASH FEATURE
DETAILS 1 OF 2

C-106

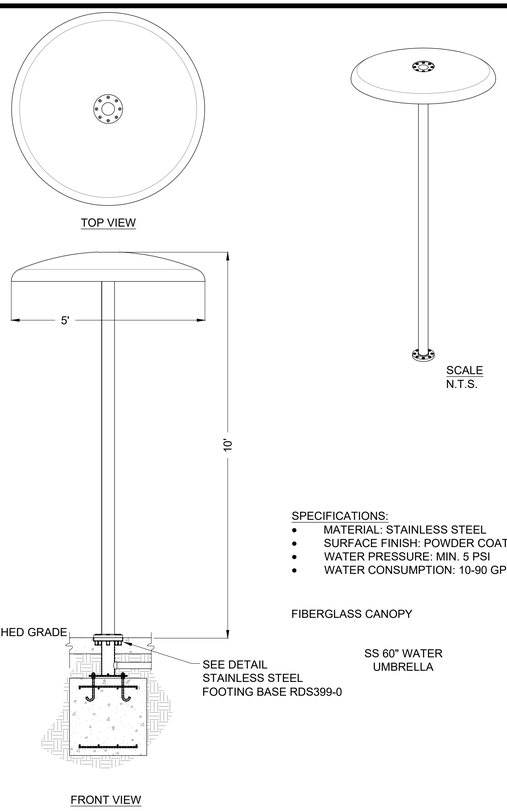

SPECIFICATIONS:
- MATERIAL: STAINLESS STEEL
- SURFACE FINISH: POWDER COAT
- WATER PRESSURE: MIN. 5 PSI
- WATER CONSUMPTION: 10-90 GPM

FIBERGLASS CANOPY

SS 60" WATER UMBRELLA

SS 60" WATER UMBRELLA

SCALE: N.T.S.

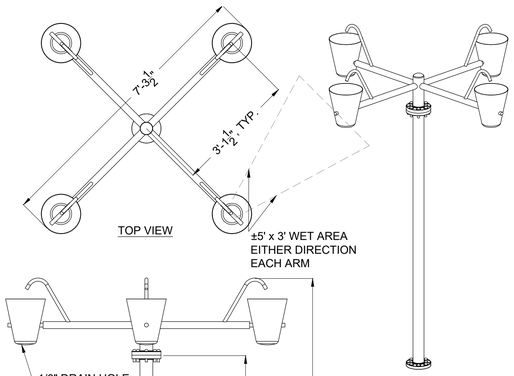

SPECIFICATIONS:
- MATERIAL: STAINLESS STEEL
- SURFACE FINISH: POWDER COAT
- WATER PRESSURE: 3-5 PSI
- WATER CONSUMPTION: 20-40 GPM

SS DUMPING BUCKET 4

SS DUMPING BUCKET 4

SCALE: N.T.S.

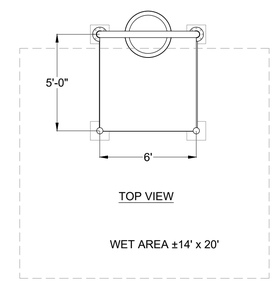

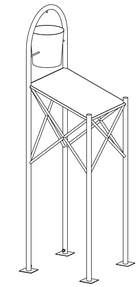

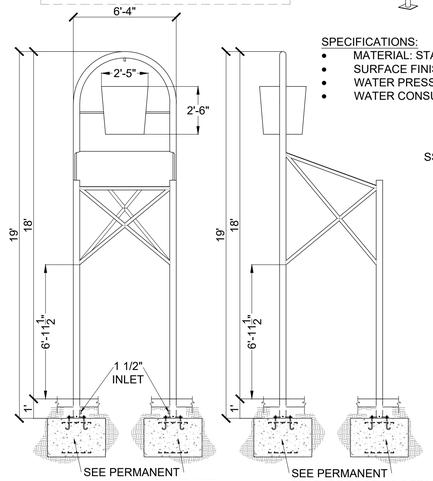

SPECIFICATIONS:
- MATERIAL: STAINLESS STEEL
- SURFACE FINISH: POWDER COAT
- WATER PRESSURE: MIN. 10 PSI
- WATER CONSUMPTION: 20-50 GPM

SS TSUNAMI

SS TSUNAMI

SCALE: N.T.S.

INCLUDES:
- SOF-TOUCH GROUND SENSOR
- PROXIMITY SENSOR
- RAIN DECK SS FOOTING BASE W/ CAP
- STAINLESS STEEL BOLTS AND GASKET

SPECIFICATIONS:
- MATERIAL: STAINLESS STEEL W/ DELRIN ACTIVATOR DOME CAP

SS SOF-TOUCH GROUND SENSOR

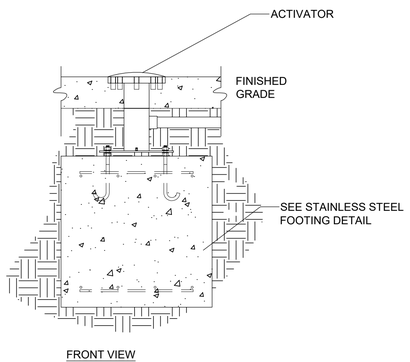

SS SOF-TOUCH GROUND SENSOR

SCALE: N.T.S.

Hurst-Rosche, Inc.
SECRETARY OF STATE CONTROL NUMBER: 000902303
561 MURFREESBORO PIKE
NASHVILLE, TN
PH: 615.454.6615
www.hurst-rosche.com
HILLSBORO, IL
EAST ST. LOUIS, IL
MARION, IL
ARNOLD, MO
NEOSHO, MO

JAMES L SIEBER
REGISTERED ENGINEER
AGRICULTURE
COMMERCE
No. 119917
STATE OF TENNESSEE

SIGNATURE
08-16-2019
DATE
04-30-2021
LICENSE EXPIRES

CEDARS OF LEBANON STATE PARK SPLASH PAD
STATE OF TENNESSEE, DEPARTMENT OF GENERAL SERVICES FOR
DEPARTMENT OF ENVIRONMENT AND CONSERVATION
LEBANON, WILSON COUNTY, TENNESSEE
SBC NO. 126/015-01-2018

MARK	DATE	DESCRIPTION

DATE: 08-16-2019
PROJECT NO: 360-3308

DESIGN:	DRAWN:	CHECK:
MWL	MWL	JLS

SPLASH FEATURE
DETAILS 2 OF 2

C-107

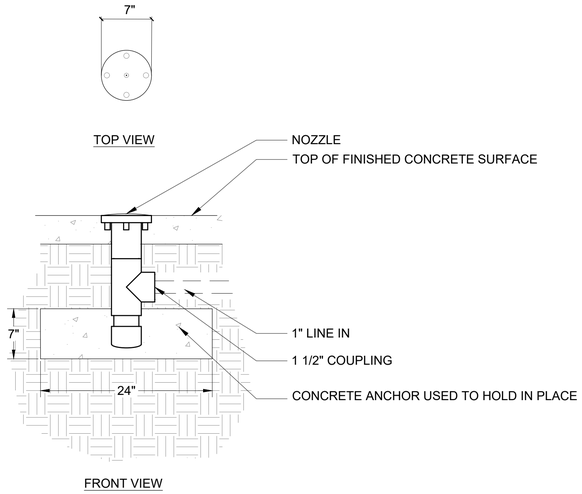

LARGE COMMERCIAL NOZZLE

SCALE: N.T.S.

FOUNDATION TYPE 1

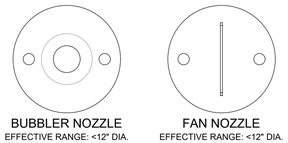

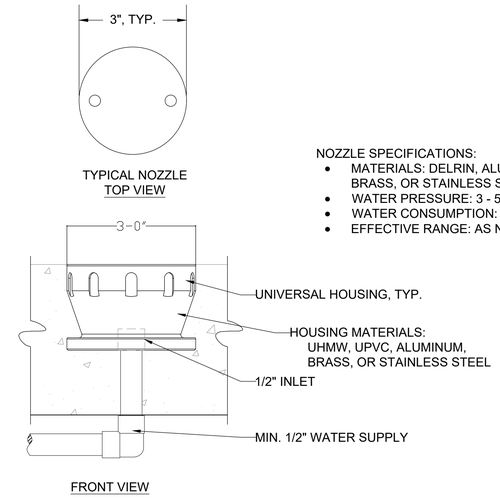

NOZZLE SPECIFICATIONS:

- MATERIALS: DELRIN, ALUMINUM, BRASS, OR STAINLESS STEEL
- WATER PRESSURE: 3 - 5 PSI
- WATER CONSUMPTION: 2-11 GPM
- EFFECTIVE RANGE: AS NOTED

UNIVERSAL HOUSING

FOUNDATION TYPE 2

SCALE: N.T.S.

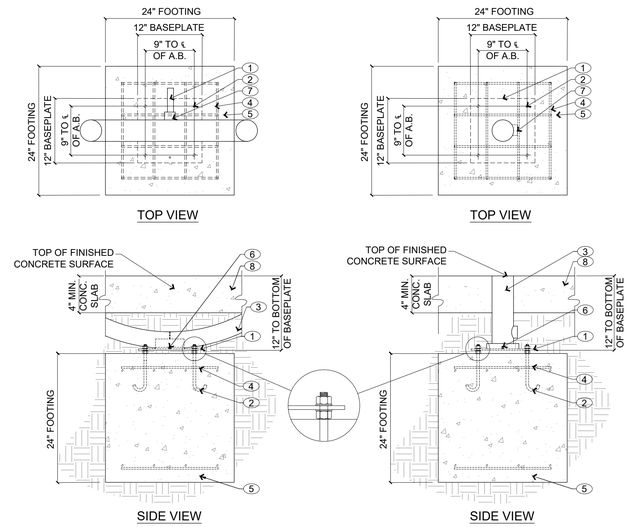

1. WATER LINE BY PLUMBING CONTRACTOR
2. 1/2" ANCHOR BOLTS TO BE LOCATED BY WOODEN PATTERN WITHIN CONCRETE BASE.
3. WATER FEATURE
4. (4) #5 BARS EACH WAY TOP AND BOTTOM - 16 BARS TOTAL.
5. 24"x24"X24"MIN. CONCRETE BASE
6. GROUNDING WIRE SHALL BE HOOKED BETWEEN TWO FLAT WASHERS AND TIGHTENED WITH NUT
7. 1½" NPT THREADED COUPLING
8. CONCRETE SLAB

NOTE:

- MANUFACTURES SPECIFICATIONS SHALL BE FOLLOWED AND HARDWARE PROVIDED SHALL BE USED UNLESS SPECIFIED OTHERWISE
- GROUT BENEATH FOOTING BASE BEARING PLATE SHALL BE 5000 PSI MINIMUM NON-SHRINK FLOWABLE GROUT OR DRYPACK. INSTALL GROUT UNDER BASE PLATE AFTER COLUMN HAS BEEN PLUMBED BUT PRIOR TO SLAB INSTALLATION.
- GROUT DEPTH SHALL BE SUFFICIENT TO ALLOW GROUT OR DRYPACK TO BE PLACED BENEATH PLATE WITHOUT VOIDS.

PERMANENT FEATURE FOOTING

SCALE: N.T.S.

FOUNDATION TYPE 3

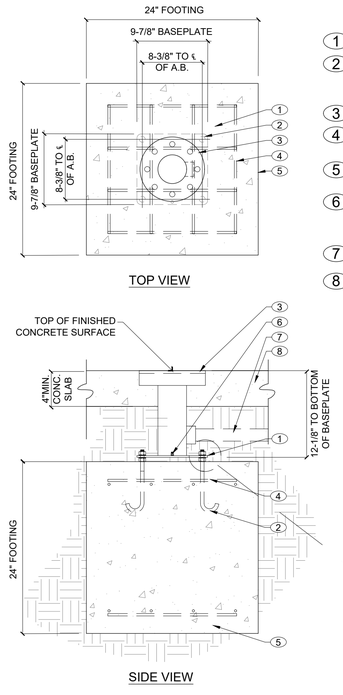

1. BASEPLATE
2. 1/2" ANCHOR BOLTS TO BE LOCATED BY WOODEN PATTERN WITHIN CONCRETE BASE.
3. FOOTING BASE
4. (4) #5 BARS EACH WAY TOP AND BOTTOM - 16 BARS, TOTAL
5. 24"x24"X24"MIN. CONCRETE FOOTING
6. GROUNDING WIRE SHALL BE HOOKED BETWEEN TWO FLAT WASHERS AND TIGHTENED WITH NUT
7. 1½" NPT THREADED COUPLING
8. CONCRETE SLAB

NOTE:

- INSTALL RAIN DECK FOOTING BASE AT CENTER OF FOOTING WITH THE BASE AT FINISHED GRADE.
- GROUT BENEATH FOOTING BASE BEARING PLATE SHALL BE 5000 PSI MINIMUM NON-SHRINK FLOWABLE GROUT OR DRYPACK. INSTALL GROUT UNDER BASEPLATE AFTER COLUMN HAS BEEN PLUMBED BUT PRIOR TO SLAB INSTALLATION.
- GROUT DEPTH SHALL BE SUFFICIENT TO ALLOW GROUT OR DRYPACK TO BE PLACED BENEATH PLATE WITHOUT VOIDS.
- BASE MUST BE PERFECTLY LEVEL.

STAINLESS STEEL FOOTING

SCALE: N.T.S.

FOUNDATION TYPE 4

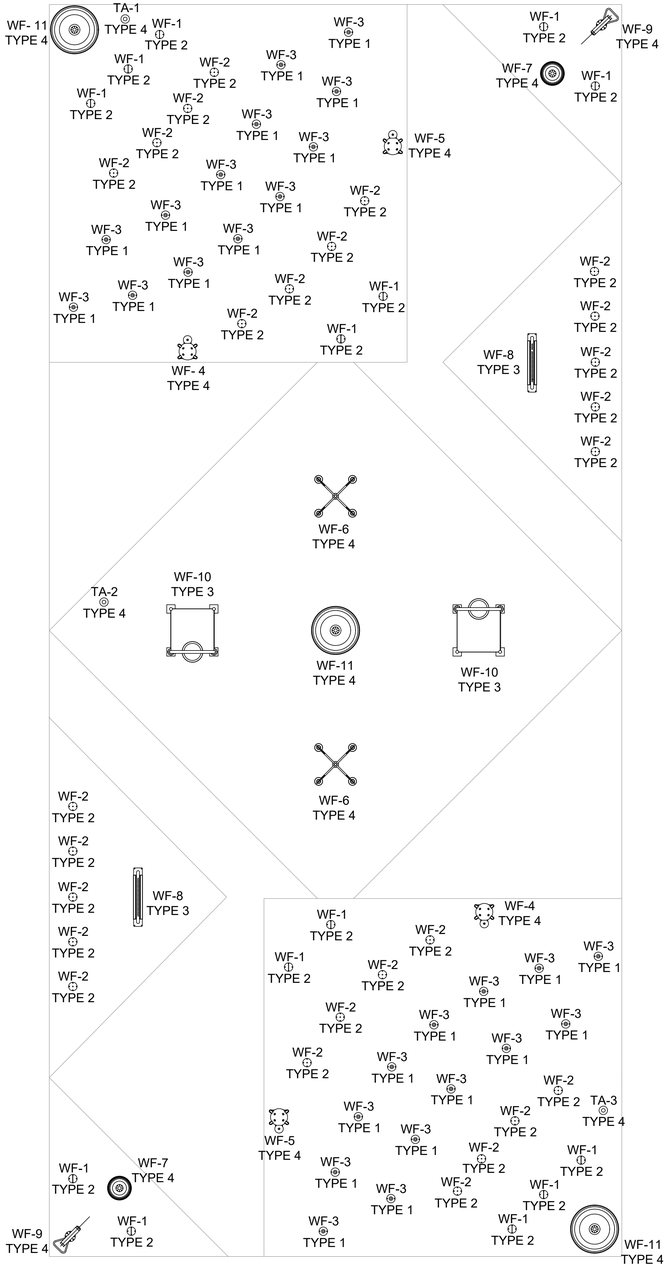

SPLASH PAD
FOUNDATION PLAN

SCALE: N.T.S.

GENERAL NOTES:

1. TOP OF FINISHED CONCRETE SURFACE SHOULD MEET AT THE CENTER OF FOOTING, BASE OR NOZZLE.
2. THE CONCRETE DECK, SPLASH PAD, AND EQUIPMENT PAD CONCRETE SURFACES SHALL BE REINFORCED WITH 6X6-W1.4 x 1.4 WWR.

Hurst-Rosche, Inc.
SECRETARY OF STATE CONTROL NUMBER: 000902303
561 MURFREESBORO PIKE
NASHVILLE, TN
PH: 615.454.6615
www.hurst-rosche.com
HILLSBORO, IL
EAST ST. LOUIS, IL
MARION, IL
ARNOLD, MO
NEOSHO, MO

JAMES L SIEPERT
REGISTERED ENGINEER
AGRICULTURE
No. 119913
STATE OF TENNESSEE

SIGNATURE
DATE 08-16-2019
LICENSE EXPIRES 05-31-2020

CEDARS OF LEBANON STATE PARK SPLASH PAD
STATE OF TENNESSEE, DEPARTMENT OF GENERAL SERVICES FOR
DEPARTMENT OF ENVIRONMENT AND CONSERVATION
LEBANON, WILSON COUNTY, TENNESSEE
SBC NO. 126/015-01-2018

MARK	DATE	DESCRIPTION

DATE: 08-16-2019
PROJECT NO: 360-3308

DESIGN:	DRAWN:	CHECK:
MWL	MWL	JLS

SPLASH FEATURE FOUNDATION PLAN & DETAILS

C-108

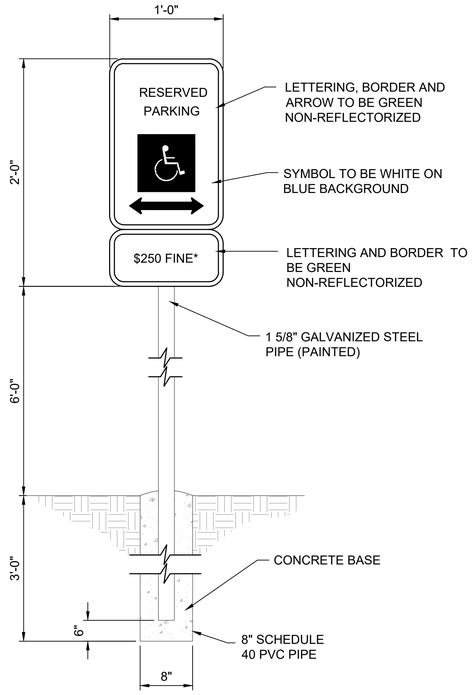

* FINE AMOUNT SHALL BE IN ACCORDANCE WITH CURRENT TENNESSEE STATUTES.

HANDICAP SIGN AND SIGN POST DETAILS (PASSENGER CAR)

NOT TO SCALE

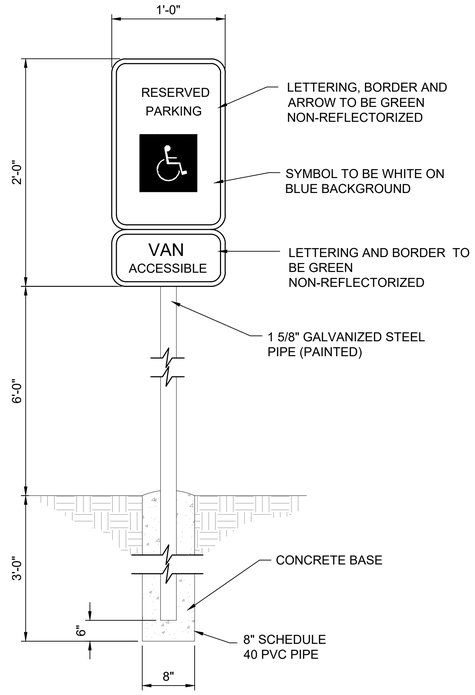

HANDICAP SIGN AND SIGN POST DETAILS (VAN ACCESSIBLE)

NOT TO SCALE

NOTE: ALL CONCRETE DECK AND EQUIPMENT PAD SURFACES SHALL HAVE A SLIP-RESISTANT FINISH. SEE SPECIFICATION SECTION 03 30 00.

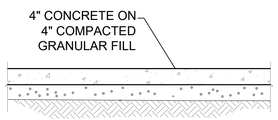

TYPICAL CONCRETE PAVEMENT SECTION

SCALE: N.T.S.

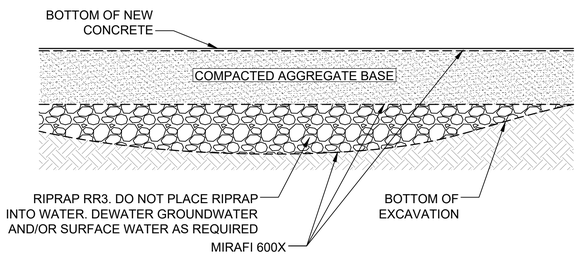

GENERAL CROSS SECTION OF FILL

SCALE: N.T.S.

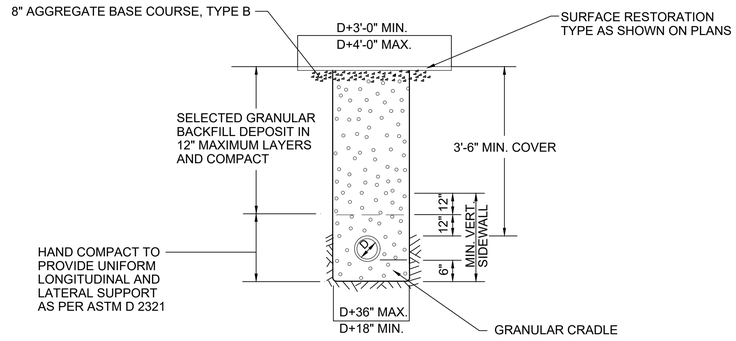

TRENCH DETAIL IMPROVED AREA

SCALE: N.T.S.

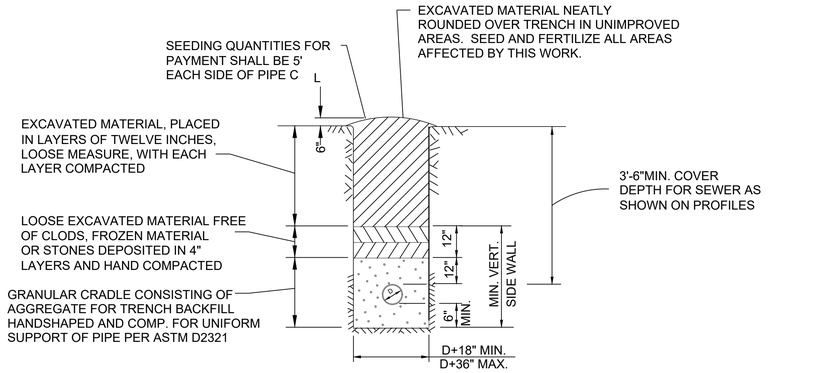

TRENCH DETAIL UNIMPROVED AREA

SCALE: N.T.S.

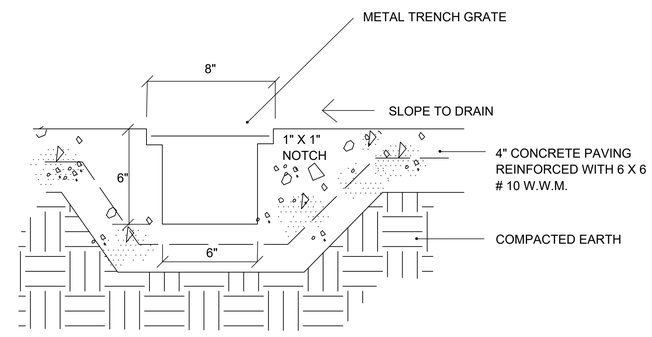

* SLOPE BOTTOM OF TRENCH DRAIN TO TIE IN WITH EXISTING DRAINAGE

TRENCH DRAIN - 6" DEEP

SCALE: N.T.S.

Hurst-Rosche, Inc.
SECRETARY OF STATE CONTROL NUMBER: 000602303
561 MURFREESBORO PIKE
NASHVILLE, TN
PH: 615.454.6615
www.hurst-rosche.com
HILLSBORO, IL
EAST ST. LOUIS, IL
MARION, IL
ARNOLD, MO
NEOSHO, MO

JAMES L SIEBERT
REGISTERED ENGINEER
STATE OF TENNESSEE
No. 119913

SIGNATURE
DATE 08-16-2019
LICENSE EXPIRES 05-31-2020

CEDARS OF LEBANON STATE PARK SPLASH PAD
STATE OF TENNESSEE, DEPARTMENT OF GENERAL SERVICES FOR
DEPARTMENT OF ENVIRONMENT AND CONSERVATION
LEBANON, WILSON COUNTY, TENNESSEE
SBC NO. 126/015-01-2018

MARK	DATE	DESCRIPTION

DATE: 08-16-2019
PROJECT NO: 360-3308

DESIGN:	DRAWN:	CHECK:
MWL	MWL	JLS

MISCELLANEOUS DETAILS - PAGE 1 OF 2

C-109

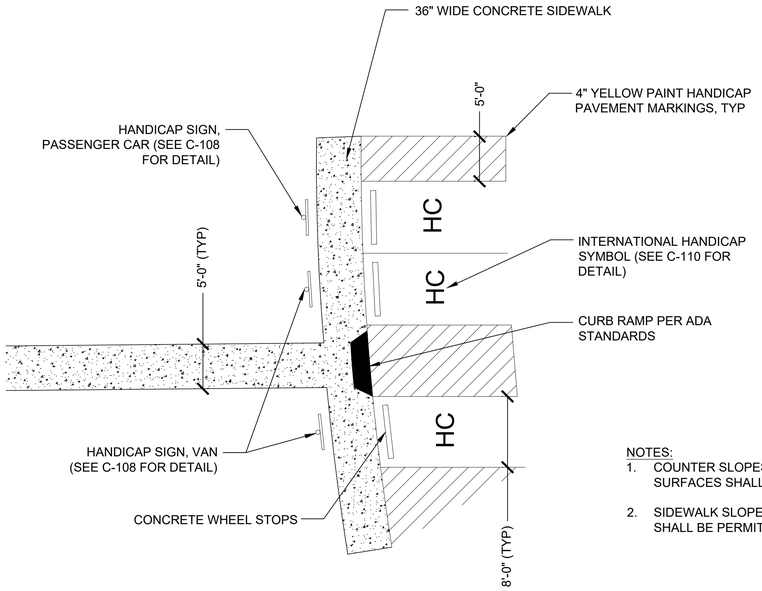

1 C-110 ADA SIDEWALK ENLARGED PLAN
SCALE: 1:8

NOTES:
1. COUNTER SLOPES OF ADJOINING ROAD SURFACES SHALL NOT BE STEEPER THAN1:20
2. SIDEWALK SLOPE NOT STEEPER THAN 1:48 SHALL BE PERMITTED.

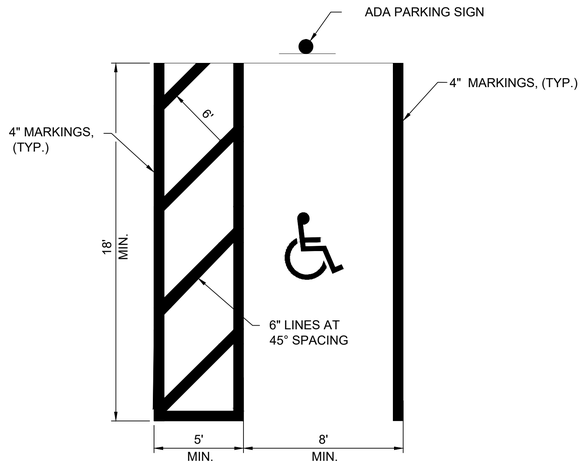

HANDICAP PARKING STALL DETAIL (PASSENGER & VAN)
NOT TO SCALE

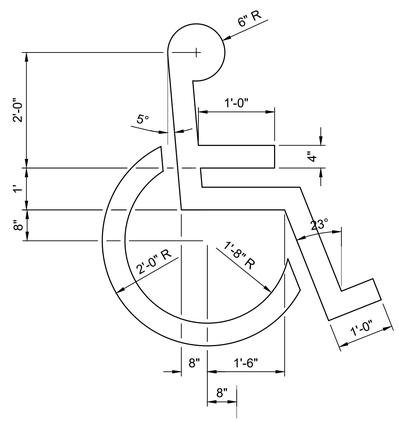

INTERNATIONAL HANDICAP SYMBOL
NOT TO SCALE

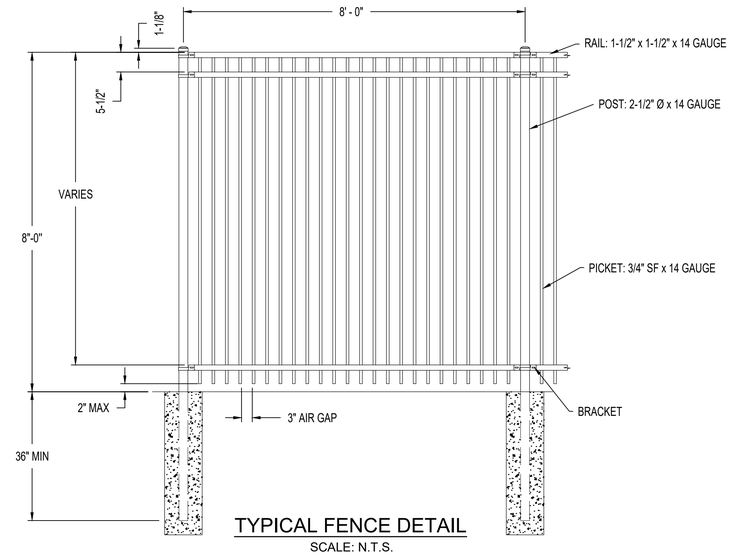

TYPICAL FENCE DETAIL
SCALE: N.T.S.

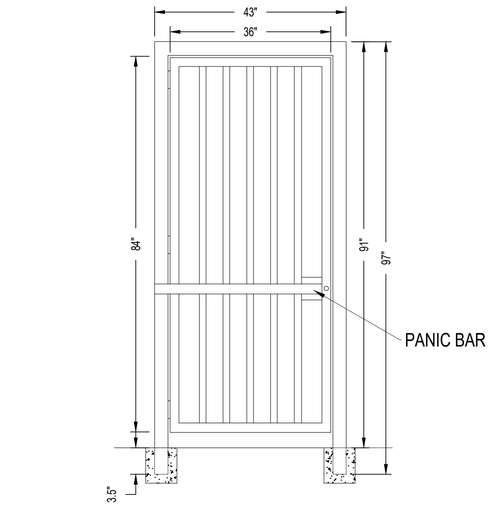

SWING GATE W/ HYDRAULIC CLOSER & PANIC BAR (ADA COMPLAINT)
SCALE: N.T.S.

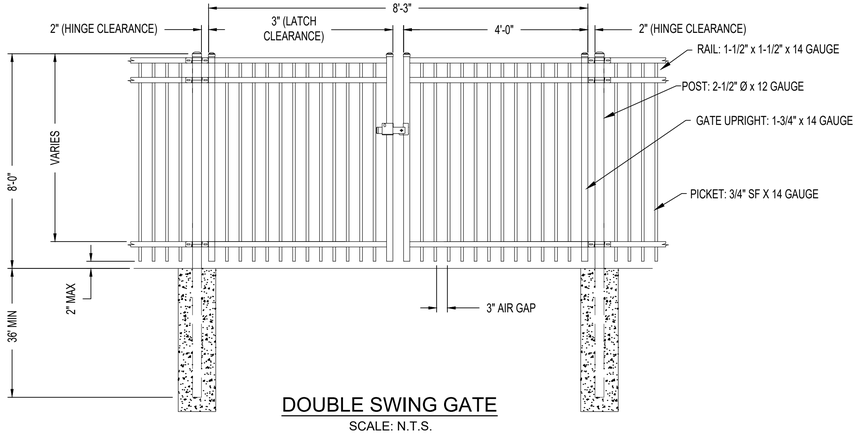

DOUBLE SWING GATE
SCALE: N.T.S.

Hurst-Rosche, Inc.
SECRETARY OF STATE CONTROL NUMBER: 000602303
561 MURFREESBORO PIKE
NASHVILLE, TN
PH: 615.454.6615
www.hurst-rosche.com
HILLSBORO, IL
EAST ST. LOUIS, IL
MARION, IL
ARNOLD, MO
NEOSHO, MO

JAMES L SIEBERT REGISTERED ENGINEER 29 AGRICULTURE MEMBER No. 119912 STATE OF TENNESSEE

SIGNATURE
DATE 08-16-2019
LICENSE EXPIRES 04-30-2021

CEDARS OF LEBANON STATE PARK SPLASH PAD
STATE OF TENNESSEE, DEPARTMENT OF GENERAL SERVICES FOR
DEPARTMENT OF ENVIRONMENT AND CONSERVATION
LEBANON, WILSON COUNTY, TENNESSEE
SBC NO. 126/015-01-2018

MARK	DATE	DESCRIPTION

DATE: 08-16-2019
PROJECT NO: 360-3308

DESIGN:	DRAWN:	CHECK:
MWL	MWL	JLS

MISCELLANEOUS DETAILS - PAGE 2 OF 2

C-110

PLUMBING GENERAL NOTES:

1. ALL EQUIPMENT AND INSTALLATIONS SHALL CONFORM TO THE REQUIREMENTS OF THE AUTHORITY HAVING JURISDICTION'S LATEST APPROVED VERSIONS OF THE INTERNATIONAL MECHANICAL CODE (IMC), THE INTERNATIONAL BUILDING CODE (IBC), THE INTERNATIONAL FIRE CODE (IFC), INTERNATIONAL CODE COUNCIL (ICC), THE INTERNATIONAL ENERGY CONSERVATION CODE (IECC), THE NATIONAL FIRE PROTECTION ASSOCIATION (NFPA 90A THROUGH NFPA 101) CODE, THE NATIONAL ELECTRIC CODE (NFPA 70), THE OCCUPATIONAL SAFETY AND HEALTH ADMINISTRATION (OSHA 1910) CODE, TENNESSEE PLUMBING CODE (MOST CURRENT ADDITION) AND ALL OTHER APPLICABLE LOCAL CODES AND ORDINANCES. ALL INSTALLATIONS SHALL ALSO COMPLY WITH THE EQUIPMENT MANUFACTURER'S INSTRUCTIONS AND RECOMMENDATIONS. SHOULD DISCREPANCIES ARISE BETWEEN THE CODE REQUIREMENTS AND THE MANUFACTURER'S REQUIREMENTS THE CONTRACTOR SHALL ADHERE TO THE STRICTER OF THE REGULATIONS.
2. ALL PIPING SHALL BE COLOR CODED PVC WITH NSF SEAL (SCHEDULE 80, ASTM D1785) SIZED TO CARRY WATER AT A VELOCITY OF NO MORE THAN 5 FT/SEC ON SUCTION LINES AND 8 FT/SEC ON PRESSURE LINES. FLANGED JOINTS AND UNIONS SHALL BE USED ON ALL EXPOSED PIPING IN EQUIPMENT ROOMS. PROVIDE CLEANOUTS AS REQUIRED. ALL PIPING SHALL BE SLOPED FOR ADEQUATE DRAINAGE (GUTTER DRAIN SHALL SLOPE AT 1/8"/FT TO EQUIPMENT ROOM). PIPING SHALL BE SUPPORTED AT SUFFICIENTLY CLOSE INTERVALS SO THAT THERE WILL BE NO SAGGING BETWEEN SUPPORTS TO TRAP WATER. PROVISIONS SHALL BE MADE FOR EXPANSION OF PIPES AND ANCHORAGE FOR THRUST LOADS. PROVIDE BALL VALVE DRAINS WITH HOSE THREADS AT ALL LOW POINTS AND MANUAL AIR VENTS AT ALL HIGH POINTS IN PIPING SYSTEM.
3. COORDINATE EQUIPMENT AND PIPING INSTALLATION WITH WORK OF ALL TRADES.
4. CONTRACTOR SHALL PROTECT ALL EXISTING MATERIALS, EQUIPMENT, PIPING, FINISHES, ETC. TO REMAIN FROM DAMAGE DURING DEMOLITION. CONTRACTOR SHALL RESTORE ANY AND ALL DAMAGE CAUSED BY DEMOLITION TO A CONDITION AND FINISH THAT IS AT LEAST EQUAL TO THAT WHICH EXISTED BEFORE CONSTRUCTION BEGAN AT NO ADDITIONAL COST TO THE OWNER/AE.
5. CONTRACTOR SHALL COORDINATE THE INSTALLATION OF ALL WATER, SANITARY, VENT, STORM, AND GAS PIPING, VALVES, AND APPURTENANCES WITH RELATED STRUCTURAL, MECHANICAL EQUIPMENT AND ELECTRICAL COMPONENTS AND DEVICES.
6. ALL FIXTURES AND PIPING SHALL BE SIZED, VENTED AND TRAPPED IN ACCORD WITH THE STATE OF TENNESSEE PLUMBING CODE, CURRENT EDITION.
7. FOR CLARITY ON PLANS, NOT ALL VENT PIPING IS SHOWN. CONTRACTOR SHALL GROUP VENT PIPING AND ROUTE TO NEAREST ADJACENT VENT, AS REQUIRED.
8. CONTRACTOR SHALL LOCATE FLOOR DRAINS 24" MINIMUM FROM NEAREST WALL (UNLESS APPROVED OTHERWISE BY A/E) TO ALLOW FOR GRADUAL FLOOR SLOPE TO FLOOR DRAIN . UNLESS INDICATED OTHERWISE, FLOOR DRAINS SHALL BE SET 1/2" BELOW FINISHED FLOOR ELEVATION. PROVIDE GRADUAL SLOPE FROM FLOOR DRAIN STRAINER UP TO FINISHED FLOOR 24" FROM CENTER OF STRAINER.
9. CONTRACTOR SHALL PROVIDE FULL SIZE (TWO-WAY) CLEAN OUT TO GRADE WITHIN 5 FT. OF BUILDING FOUNDATION ON ALL SANITARY SEWER BUILDING DRAIN PIPING.
10. CONTRACTOR SHALL COORDINATE EXACT LOCATION OF FLOOR DRAIN IN MECHANICAL ROOMS WITH LOCATION OF MECHANICAL EQUIPMENT AND IN OTHER AREAS WITH LOCATION OF MISCELLANEOUS EQUIPMENT. THE ACTUAL PLACEMENT MAY DIFFER WITH THAT INDICATED ON PLANS DUE TO EQUIPMENT VARIATIONS AND REQUIREMENTS.
11. CONTRACTOR SHALL PROVIDE QUARTER-TURN, BALL VALVE TYPE, SUPPLY SHUT-OFF VALVES AND AIR CHAMBERS ON ALL PLUMBING FIXTURE WATER SUPPLY LINES AND BALL VALVES FOR EACH DEVICE OR EQUIPMENT WATER SUPPLY LINE.
12. CONTRACTOR SHALL PROVIDE SHUT-OFF VALVES AT THE BASE OF ALL WATER SUPPLY RISERS.
13. CONTRACTOR SHALL SUPPLY PROPERLY SIZED MECHANICAL WATER HAMMER ARRESTORS AT THE END OF LONG WATER SUPPLY PIPING RUNS OR NEAR BATTERIES OF FIXTURES.
14. ALL SANITARY SEWER AND VENT PIPING THAT IS TO BE INSTALLED EXPOSED AND NOT CONCEALED IN WALLS, FLOORS, OR CEILINGS SHALL BE CAST IRON UNLESS NOTED OTHERWISE.
15. CONTRACTOR SHALL PROVIDE EQUIPMENT DRAINS FOR ALL APPLIANCES (AIR HANDLERS, WATER HEATERS, ETC.) AND ROUTE TO NEAREST FLOOR DRAIN. PROVIDE CODE COMPLIANT INDIRECT CONNECTION AT FLOOR DRAIN.
16. FOR CLARITY, NOT ALL COTWs ARE SHOWN ON PLANS. CONTRACTOR SHALL PROVIDE CLEANOUTS AT THE BASE OF ALL SANITARY SEWER STACK PIPING AS REQUIRED BY CODE.
17. WHERE NOT OTHERWISE INDICATED, CONTRACTOR SHALL PROVIDE CLEANOUTS NOT MORE THAN 50 FEET APART, INCLUDING THE DEVELOPED LENGTH OF THE CLEANOUT PIPE, IN SANITARY SEWER PIPING 4 INCHES OR LESS, AND NOT MORE THAN 100 FEET APART IN SANITARY OR STORM PIPING GREATER THAN 4 INCHES (THIS LENGTH MAY BE DOUBLED WHEN TWO-WAY CLEANOUTS ARE PROPERLY USED) A CLEANOUT SHALL BE PLACED AS THE BASE OF ALL WASTE STACKS. WHERE NOT OTHERWISE INDICATED, CLEANOUTS SHALL BE PLACED IN ACCORDANCE WITH SECTION 890.420 OF THE TENNESSEE PLUMBING CODE, CURRENT EDITION.
18. CONTRACTOR SHALL PROVIDE CONCRETE EQUIPMENT PADS AS REQUIRED FOR PLUMBING EQUIPMENT. EQUIPMENT PADS SHALL BE MINIMUM OF 6 INCHES LARGER ON ALL SIDES THAN FOOTPRINT OF EQUIPMENT WITH 3/4" CHAMFER ON ALL EXPOSED EDGES.
19. CONTRACTOR SHALL PROVIDE PIPE SLEEVES FOR ALL PLUMBING PIPING THAT PENETRATES FOUNDATIONS AND FLOORS. PENETRATION SHALL BE CODE COMPLIANT, ALLOW PIPE MOVEMENT AND SHALL BE WATERPROOF.
20. CONTRACTOR SHALL PROVIDE INLET AND OUTLET BALL OR GATE VALVES AND UNIONS ON ALL BACKFLOW PREVENTERS (EITHER SEPARATELY OR AS ACCESSORIES TO BACKFLOW PREVENTERS). ALL BACKFLOW PREVENTERS SHALL HAVE STRAINERS ON THE INLET SIDE.
21. ALL BACKFLOW PREVENTERS SHALL BE INSPECTED AND TESTED BY A LICENSED CROSS CONNECTION CONTROL DEVICE INSPECTOR AND PROPER PAPERWORK SHALL BE SUBMITTED TO THE USING AGENCY PRIOR TO BUILDING OCCUPATION.
22. WATER FEATURE NOZZLE VELOCITIES SHALL NOT EXCEED 20 FEET / SEC.

PLUMBING ABBREVIATION LIST

ABBREVIATION	DESCRIPTION
A.F.F.	ABOVE FINISHED FLOOR
APPROX.	APPROXIMATELY
BG	BELOW GRADE
BLDG.	BUILDING
BTU/HR	BRITISH THERMAL UNITS PER HOUR
CFM	CUBIC FEET PER MINUTE
C.I.	CAST IRON
CONT.	CONTINUATION
C.O.	CLEANOUT
CP-X	CIRCULATING PUMP
COTG	CLEANOUT TO GRADE
COTF	CLEANOUT TO FLOOR
COTW	CLEANOUT TO WALL
CU	CUBIC
CWS	COLD WATER SUPPLY
D.I.	DUCTILE IRON
DIA.	DIAMETER
DISCH.	DISCHARGE
EGV-X	EMERGENCY GAS VALVE
ELEV.	ELEVATION
EQUIP.	EQUIPMENT
ET-X	EXPANSION TANK
EWC-X	ELECTRIC WATER COOLER
EW-X	EMERGENCY EYEWASH
EWSH-X	EMERGENCY EYEWASH/DRENCH SHOWER
EXP.	EXPANSION
F.	FAHRENHEIT
FD-X	FLOOR DRAIN
F.F.E.	FINISHED FLOOR ELEVATION
FT.	FEET
GALV.	GALVANIZED
GAL	GALLONS
G.P.M.	GALLONS PER MINUTE
HB-X	HOSE BIB
H.P.	HORSE POWER
HR	HOUR
HWR	HOT WATER RETURN
HWS	HOT WATER SUPPLY
HYD-X	WALL HYDRANT
IN.	INCHES
INV.	INVERT
LAV-X	LAVATORY
MAX.	MAXIMUM
MIN.	MINIMUM
MS-X	MOP SINK
NPT	NOMINAL PIPE THREAD
OS-X	OIL SEPARATOR
PSI	POUNDS PER SQUARE INCH
PVC	POLYVINYL CHLORIDE
RE:	REFER
REINF.	REINFORCING
REQ'D.	REQUIRED
RP-X	RECIRCULATION PUMP
R..M.	REVOLUTIONS PER MINUTE
RPZ	REDUCED PRESSURE ZONE BACK FLOW PREVENTER
S.F.	SQUARE FEET
SH-X	SHOWER
SHT.	SHEET
SK-X	SINK
SS-X	SERVICE SINK
SST	STAINLESS STEEL
TD-X	TRENCH DRAIN
TMV-X	THERMOSTATIC MIXING VALVE
T.P.R.	TEMPERATURE/PRESSURE RELIEF VALVE
TYP.	TYPICAL
TWS	TEMPERED WATER SUPPLY
TWR	TEMPERED WATER RETURN
UR-X	URINAL
VTR	VENT THRU ROOF
WB-X	WASHER BOX
WC-X	WATER CLOSET
WH-X	WATER HEATER

NOTE: SOME ABBREVIATIONS INDICATED IN LEGEND MAY NOT BE USED IN THIS PROJECT

Hurst-Rosche, Inc.
SECRETARY OF STATE CONTROL NUMBER: 000602303
561 MURFREESBORO PIKE
NASHVILLE, TN
PH: 615.454.6615
www.hurst-rosche.com
HILLSBORO, IL
EAST ST. LOUIS, IL
MARION, IL
ARNOLD, MO
NEOSHO, MO

JAMES L. SIEPERT
REGISTERED ENGINEER
No. 119313
STATE OF TENNESSEE
PLUMBING
AGRICULTURE
OWNER

SIGNATURE 08-16-2019
DATE 05-31-2020
LICENSE EXPIRES

CEDARS OF LEBANON STATE PARK SPLASH PAD
STATE OF TENNESSEE, DEPARTMENT OF GENERAL SERVICES FOR
DEPARTMENT OF ENVIRONMENT AND CONSERVATION
LEBANON, WILSON COUNTY, TENNESSEE
SBC NO. 126/015-01-2018

MARK	DATE	DESCRIPTION

DATE: 08-16-2019
PROJECT NO: 360-3308

DESIGN:	DRAWN:	CHECK:
MWL	JJD	JLS

PLUMBING GENERAL NOTES AND ABBREVIATIONS

P-101

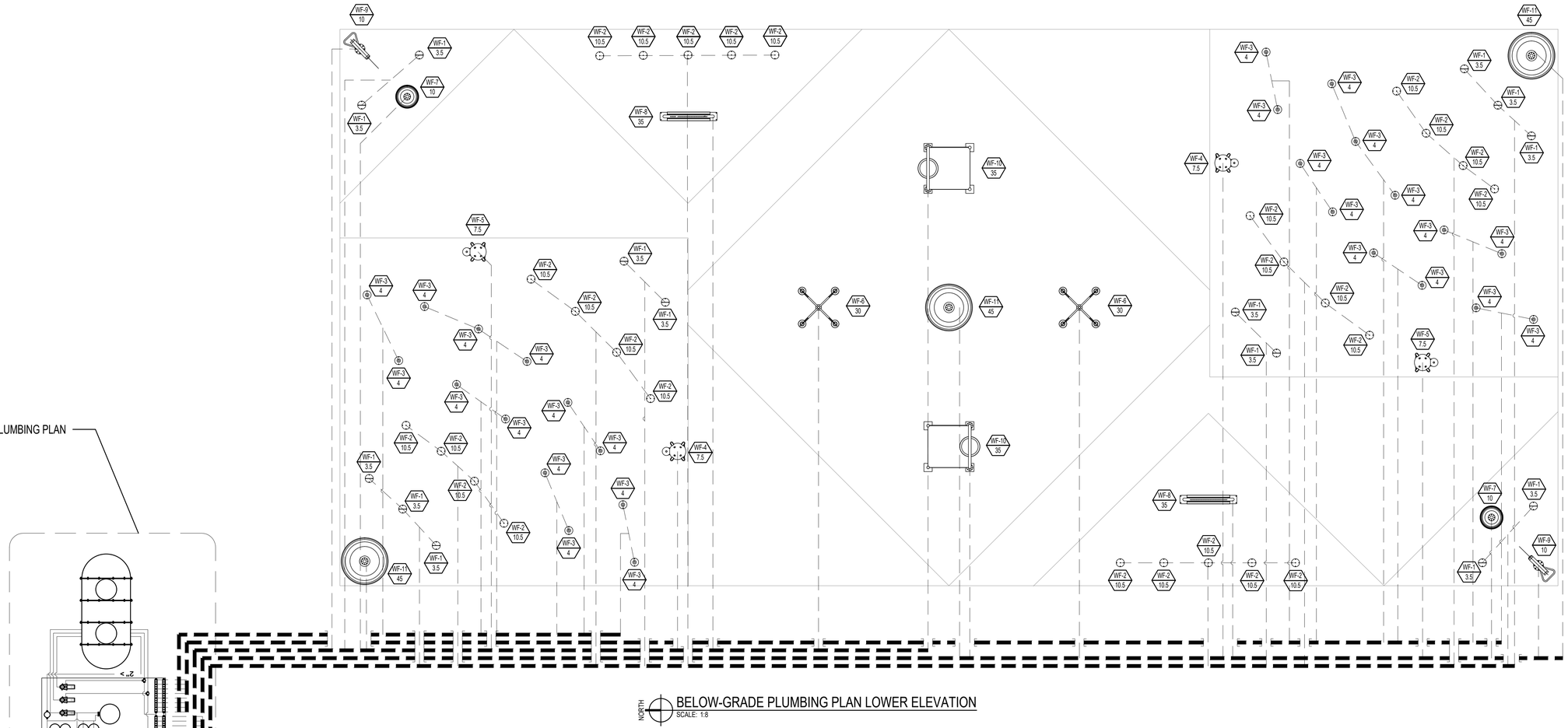

NORTH

BELOW-GRADE PLUMBING PLAN LOWER ELEVATION

SCALE: 1:8

GENERAL NOTES:

1. ALL WATER PIPING TO/FROM FEATURES AND FILTER/PUMP SYSTEM SHALL BE SCH. 80 PVC.
2. ALL BELOW GRADE DRAINAGE/SEWER PIPING SHALL BE SLEEVED FOR PROXIMITY TO AND PROTECTION OF NEARBY WATER SUPPLY PIPING IN ACCORDANCE WITH STATE AND LOCAL CODE.
3. SEE "C" SHEETS FOR ADDITIONAL SITE INFORMATION.
4. SEE SHEET P-104 FOR PIPING DIAGRAM.
5. SEE SHEET P-105 & P-106 FOR PLUMBING DETAILS AND SCHEDULES.

PERFORMANCE NOTES:

- FLOOR FITTING HOLES SHALL NOT EXCEED 5/16"
- NOZZLE VELOCITY SHALL NOT EXCEED 20 FEET PER SECOND
- IN-GROUND NOZZLES SHALL BE FLUSH MOUNTED WITH FINAL DECK POUR SO AS NOT TO PROTRUDE ABOVE THE FINISHED SPLASH PAD

CONCRETE NOTES:

- CONCRETE TO BE 4" MINIMUM POUR, BROOM FINISH
- CONCRETE PAD TO HAVE 3/8" REBAR @ 18" O.C. OR WIRE MESH, TYP.
- SLOPE PAD TOWARDS DRAINS @ 1/4" PER 1'-0"
- SLOPE 4' PERIMETER "DRY ZONE" AWAY FROM PAD TO TRENCH DRAIN AND LANDSCAPING @ 1/4" PER 1'-0"

BELOW-GRADE PLUMBING PLAN LEGEND

SYMBOL	DESCRIPTION
	NEW BELOW GRADE WATER SUPPLY (> 3")
	NEW BELOW GRADE WATER SUPPLY(≤ 3")
TAG / GPM	NEW WATER FEATURE (FEATURE TAG / WATER FLOW IN GPM)

Hurst-Rosche, Inc.
SECRETARY OF STATE CONTROL NUMBER: 000902303
561 MURFREESBORO PIKE
NASHVILLE, TN
PH: 615.454.6615
www.hurst-rosche.com
HILLSBORO, IL
EAST ST. LOUIS, IL
MARION, IL
ARNOLD, MO
NEOSHO, MO

JAMES L. SIEBERT
REGISTERED ENGINEER
AGRICULTURE
COMMERCE
No. 119312
STATE OF TENNESSEE

SIGNATURE 08-16-2019
DATE 05-31-2020
LICENSE EXPIRES

CEDARS OF LEBANON STATE PARK SPLASH PAD
STATE OF TENNESSEE, DEPARTMENT OF GENERAL SERVICES FOR
DEPARTMENT OF ENVIRONMENT AND CONSERVATION
LEBANON, WILSON COUNTY, TENNESSEE
SBC NO. 126/015-01-2018

MARK	DATE	DESCRIPTION

DATE: 08-16-2019
PROJECT NO: 360-3308

DESIGN:	DRAWN:	CHECK:
MWL	JJD	JLS

BELOW-GRADE PLUMBING PLAN LOWER ELEVATION

P-102

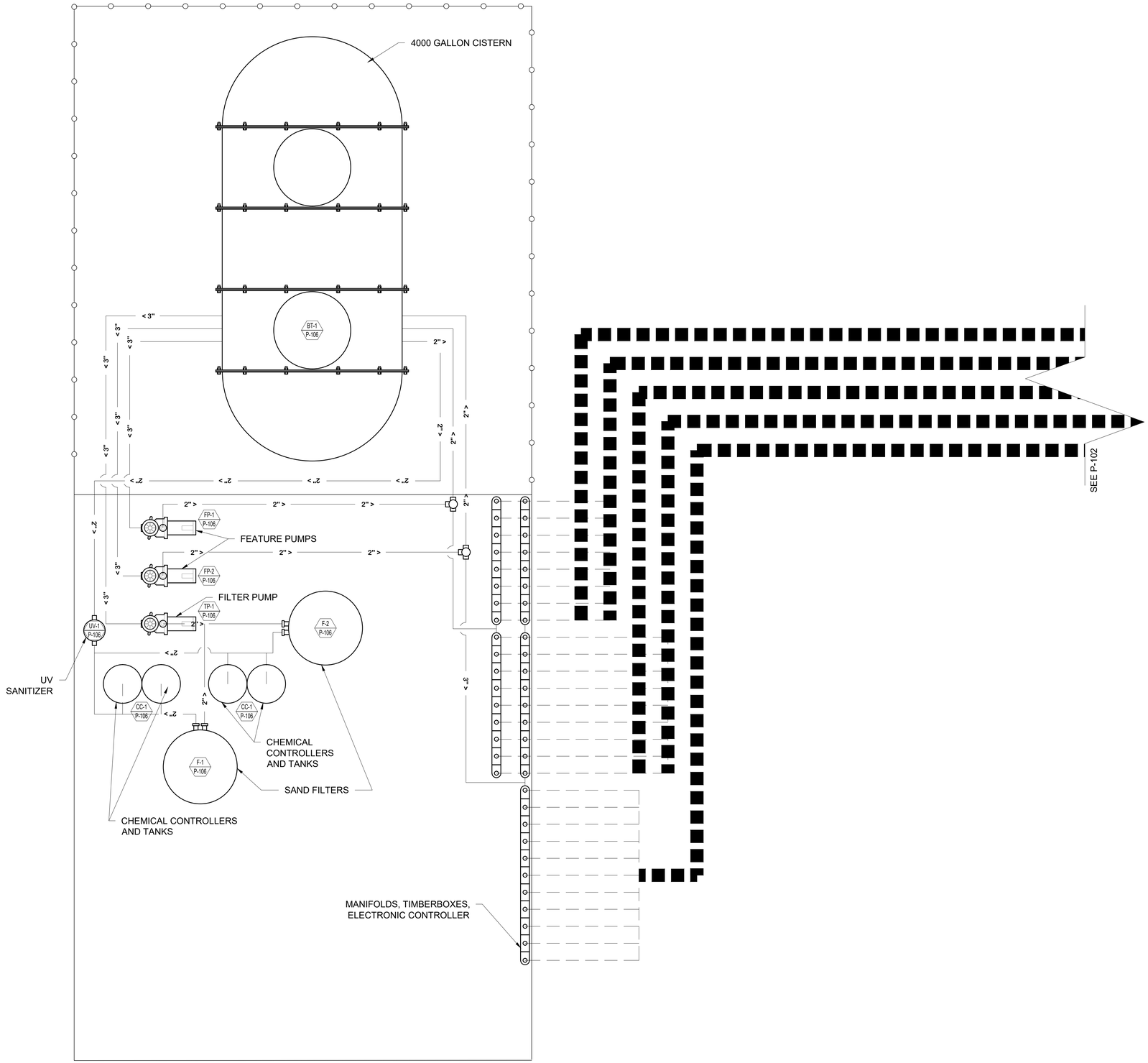

NORTH

ENLARGED PLUMBING PLAN
SCALE: 1:2

GENERAL NOTES:

1. ALL WATER PIPING TO/FROM FEATURES AND FILTER/PUMP SYSTEM SHALL BE SCH. 80 PVC.
2. ALL EQUIPMENT SHOWN ON DRAWINGS SHALL BE INSTALLED IN STRICT ACCORDANCE WITH HE EQUIPMENT MANUFACTURER'S RECOMMENDATION AND SHALL COMPLY WITH TENNESSEE CODE.
3. ALL PIPING SHALL BE COLOR CODED PVC WITH NSF SEAL (SCHEDULE 80, ASTM D1785) SIZED TO CARRY WATER AT A VELOCITY OF NO MORE THE 5 FT/SEC ON SUCTION LINES AND 8 FT/SEC ON PRESSURE LINES, FLANGED JOINTS AND UNIONS SHALL BE USED ON ALL EXPOSED PIPING. PROVIDE CLEANOUTS AS REQUIRED. ALL PIPING SHALL BE SLOPED FOR ADEQUATE DRAINAGE. ANY ABOVE GRADE PIPING SHALL BE SUPPORTED AT A SPACING SO THAT THERE WILL BE NO SAGGING BETWEEN SUPPORTS TO TRAP WATER. PROVISIONS SHALL BE MADE FOR EXPANSION OF PIPES AND ANCHORAGE FOR THRUST LOADS. PROVIDE BALL VALVE DRAINS WITH HOSE THREADS AT ALL LOW POINTS AND MANUAL AIR VENTS AT ALL HIGH POINTS IN PIPING SYSTEM.
4. COORDINATE EQUIPMENT AND PIPING INSTALLATION WITH WORK OF ALL TRADES.
5. SEE SHEET P-105 & P-106 FOR DETAILS AND SCHEDULES.

BELOW-GRADE PLUMBING PLAN LEGEND

SYMBOL	DESCRIPTION
— — — — —	NEW BELOW GRADE WATER SUPPLY (> 3")
- - - - - - - - - -	NEW BELOW GRADE WATER SUPPLY(≤ 3")
TAG / SHT	NEW PLUMBING EQUIP. (EQUIP. TAG/EQUIP. SCHEDULE SHEET #)

Hurst-Rosche, Inc.
SECRETARY OF STATE CONTROL NUMBER: 000902303
561 MURFREESBORO PIKE
NASHVILLE, TN
PH: 615.454.6615
www.hurst-rosche.com
HILLSBORO, IL
EAST ST. LOUIS, IL
MARION, IL
ARNOLD, MO
NEOSHO, MO

JAMES L SIEBERT
REGISTERED ENGINEER
No. 119913
STATE OF TENNESSEE
AGRICULTURE
COMMERCE

SIGNATURE
08-16-2019
DATE
05-31-2020
LICENSE EXPIRES

CEDARS OF LEBANON STATE PARK SPLASH PAD
STATE OF TENNESSEE, DEPARTMENT OF GENERAL SERVICES FOR
DEPARTMENT OF ENVIRONMENT AND CONSERVATION
LEBANON, WILSON COUNTY, TENNESSEE
SBC NO. 126/015-01-2018

MARK	DATE	DESCRIPTION

DATE: 08-16-2019
PROJECT NO: 360-3308

DESIGN:	DRAWN:	CHECK:
MWL	JJD	JLS

ENLARGED
PLUMBING PLAN

P-103

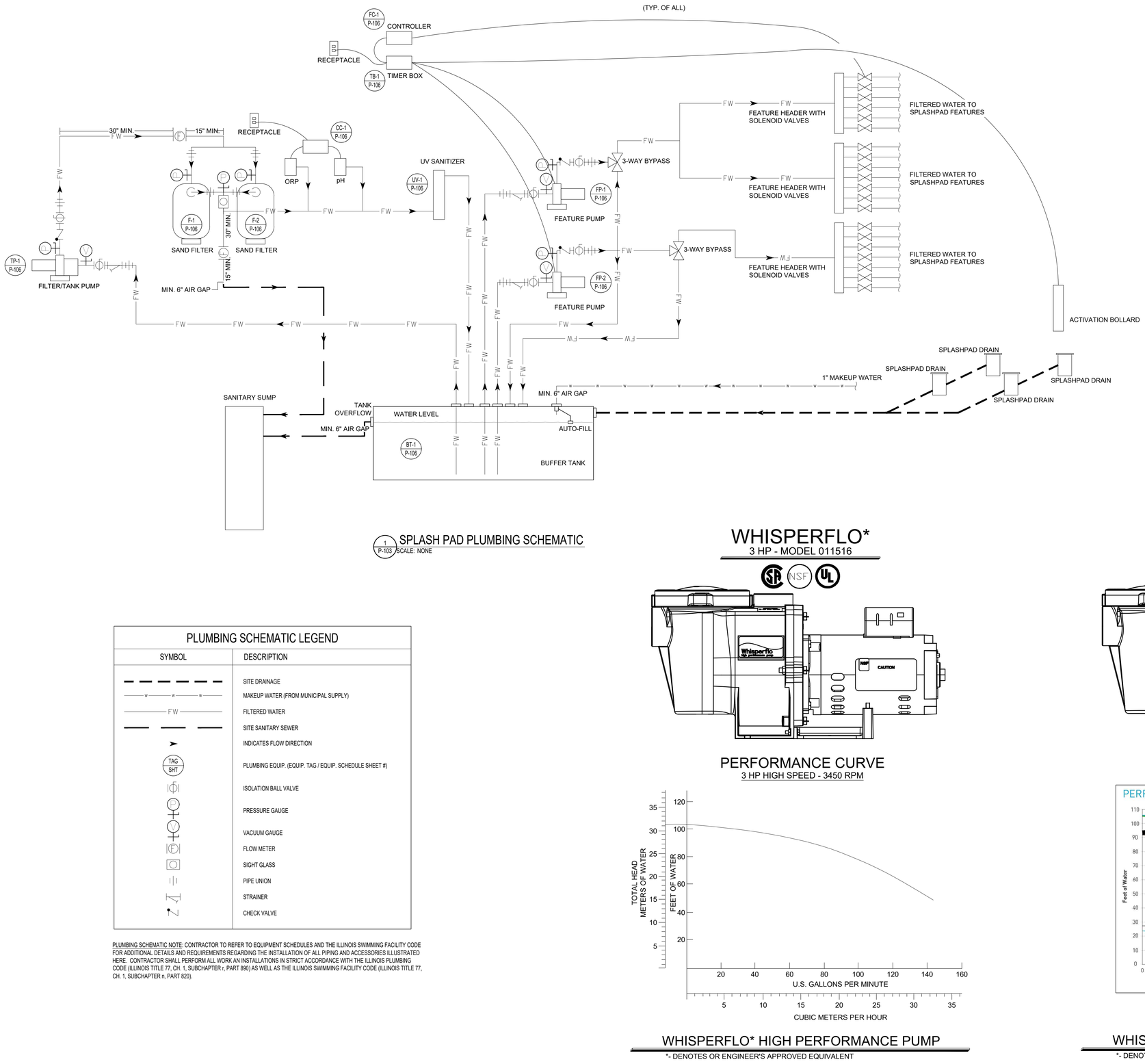

1 P-103 SPLASH PAD PLUMBING SCHEMATIC
SCALE: NONE

PLUMBING SCHEMATIC LEGEND

SYMBOL	DESCRIPTION
	SITE DRAINAGE
W W W	MAKEUP WATER (FROM MUNICIPAL SUPPLY)
FW	FILTERED WATER
	SITE SANITARY SEWER
	INDICATES FLOW DIRECTION
TAG / SHT	PLUMBING EQUIP. (EQUIP. TAG / EQUIP. SCHEDULE SHEET #)
	ISOLATION BALL VALVE
	PRESSURE GAUGE
	VACUUM GAUGE
F	FLOW METER
	SIGHT GLASS
	PIPE UNION
	STRAINER
	CHECK VALVE

PLUMBING SCHEMATIC NOTE: CONTRACTOR TO REFER TO EQUIPMENT SCHEDULES AND THE ILLINOIS SWIMMING FACILITY CODE FOR ADDITIONAL DETAILS AND REQUIREMENTS REGARDING THE INSTALLATION OF ALL PIPING AND ACCESSORIES ILLUSTRATED HERE. CONTRACTOR SHALL PERFORM ALL WORK AN INSTALLATIONS IN STRICT ACCORDANCE WITH THE ILLINOIS PLUMBING CODE (ILLINOIS TITLE 77, CH. 1, SUBCHAPTER r, PART 890) AS WELL AS THE ILLINOIS SWIMMING FACILITY CODE (ILLINOIS TITLE 77, CH. 1, SUBCHAPTER n, PART 820).

WHISPERFLO*
3 HP - MODEL 011516

PERFORMANCE CURVE
3 HP HIGH SPEED - 3450 RPM

WHISPERFLO* HIGH PERFORMANCE PUMP

*- DENOTES OR ENGINEER'S APPROVED EQUIVALENT

WHISPERFLO*
5 HP - MODEL XFE-20

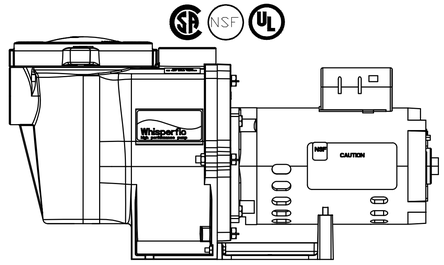

PERFORMANCE CURVE
5 HP HIGH SPEED - 3450 RPM

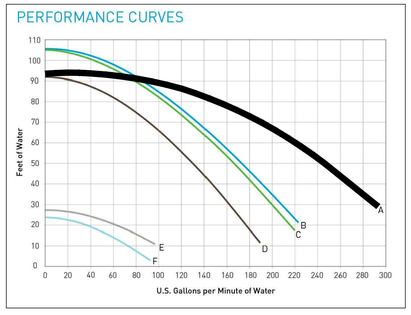

WHISPERFLO* HIGH PERFORMANCE PUMP

*- DENOTES OR ENGINEER'S APPROVED EQUIVALENT

Hurst-Rosche, Inc.
SECRETARY OF STATE CONTROL NUMBER: 00092303
561 MURFREESBORO PIKE
NASHVILLE, TN
PH: 615.454.6615
www.hurst-rosche.com
HILLSBORO, IL
EAST ST. LOUIS, IL
MARION, IL
ARNOLD, MO
NEOSHO, MO

JAMES L SIEBERT REGISTERED ENGINEER DEPARTMENT OF AGRICULTURE COMMERCE No. 119917 STATE OF TENNESSEE

SIGNATURE
DATE 08-16-2019
LICENSE EXPIRES 05-31-2020

CEDARS OF LEBANON STATE PARK SPLASH PAD
STATE OF TENNESSEE, DEPARTMENT OF GENERAL SERVICES FOR
DEPARTMENT OF ENVIRONMENT AND CONSERVATION
LEBANON, WILSON COUNTY, TENNESSEE
SBC NO. 126/015-01-2018

MARK	DATE	DESCRIPTION

DATE: 08-16-2019
PROJECT NO: 360-3308

DESIGN:	DRAWN:	CHECK:
MWL	JJD	JLS

PLUMBING DIAGRAM

P-104

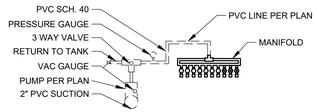

MANIFOLD CONNECTION DIAGRAM

SCALE: N.T.S.

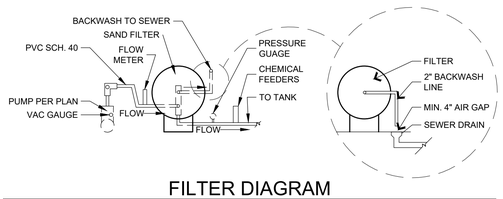

FILTER DIAGRAM

SCALE: N.T.S.

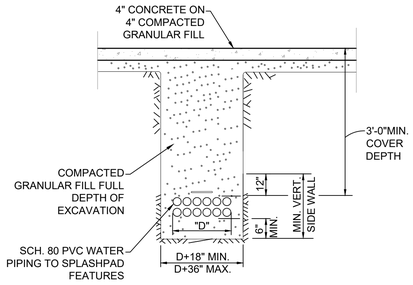

WATER FEATURE SUPPLY PIPING TRENCH DETAIL

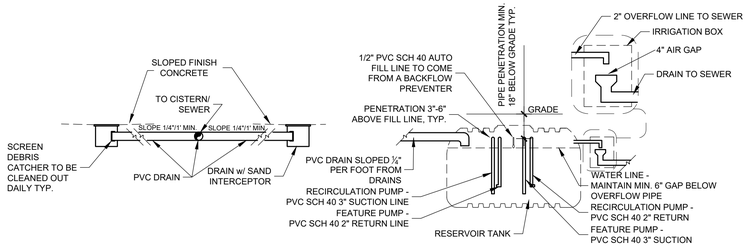

TYPICAL DRAINING SECTION

SCALE: N.T.S.

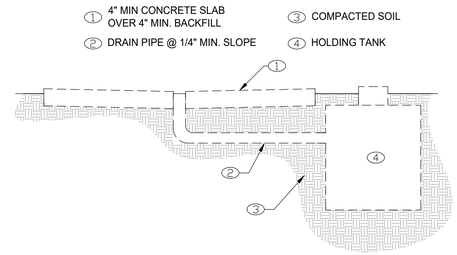

DRAINAGE TO HOLDING TANK SECTION

SCALE: N.T.S.

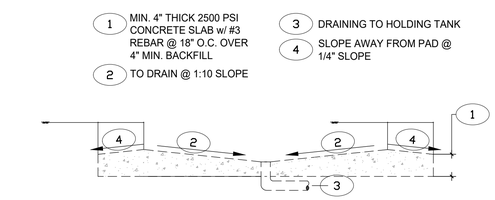

TYPICAL SPLASH PAD SECTION

SCALE: N.T.S.

RAIN DECK*

CHEMICAL CONTROL SYSTEM
IPS MODEL M790

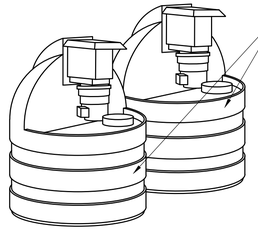

STENNER TANK SYSTEM

- 15 GALLON TANK
- TANK: POLYETHYLENE, CERTIFIED NSF/ANSI 61
- POLYPROPYLENE LID w/ CHILD-RESISTANT LOCK
- PRE-INSTALLED w/ STENNER PUMP MODEL 45M1

45M1 PUMP

- SINGLE HEAD ADJUSTABLE OUTPUT
- MAXIMUM 3 GPD @25 PSI

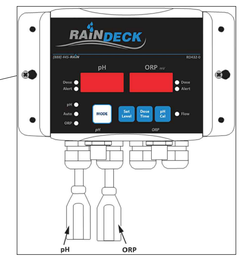

RAIN DECK CHECMICAL CONTROLLER

- NSF CERTIFIED*

RAIN DECK CHEMICAL CONTROL SYSTEM*

*DENOTES OR ENGINEER'S APPROVED EQUAL

SCALE: N.T.S.

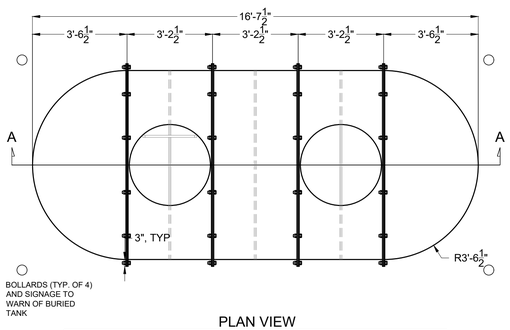

PLAN VIEW

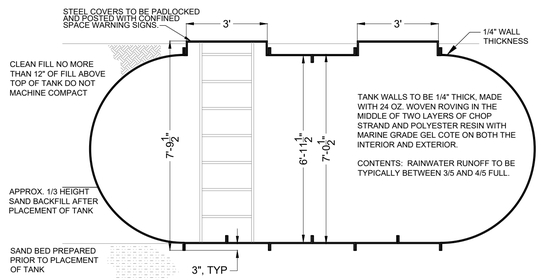

SECTION A-A

SCALE: N.T.S.

4000 GALLON TANK

SCALE: N.T.S.

TRITON II TR 140*

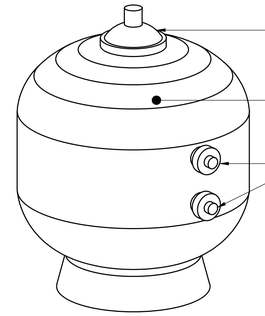

HEAVY-DUTY CLOSURE w/ BUILT-IN PRESSURE RELIEF VALVE

GasLok ONE-PIECE FIBERGLASS REINFORCED TANK

THREADED BULKHEAD CONNECTORS

TR 140

FILTER AREA: 7.06 S.F.
VERTICAL CLEARANCE: 47.25"
FILTER DIAMETER: 36"
REQUIRED SAND: 92.5 lbs
FLOW RATE: 141 GPM
TURNOVER CAPACITY: 8,460 GAL. PER HOUR

PENTAIR TRITION II FIBERGLASS SAND FILTER*

*DENOTES OR ENGINEER'S APPROVED EQUAL

SCALE: N.T.S.

E & ES 80*

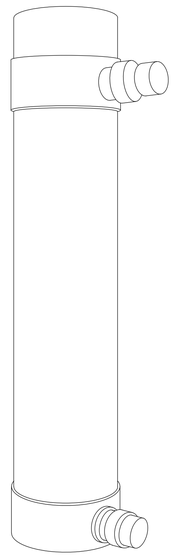

PRODUCT FEATURES:

- 8" PVC HOUSING w/ STAINLESS STEEL REFLECTIVE INNER WRAPPER
- ELECTRONIC BALLAST
- 13,000 HR. HIGH OUTPUT/LOW PRESSURE LAMP
- DRY FIRE PROTECTION
- PRESSURE GAUGE
- INDOOR/OUTDOOR INSTALLATION
- 2" PVC UNIONS

RATED PRESSURE (PSI): 40 - 3 BARS
MAX. FLOW RATE (GPM): 80
MAX FLOW RATE (m^3/h): 18
PERFORMANCE: (mJ/cm^2) 30mJ/cm^2
UV LAMPS: 1
UV LAMP POWER CONSUMPTION: 80 W
BALLASTS: 1
REACTOR LENGTH: 38.75"
REACTOR DIAMETER: 8"
INLET/OUTLET SIZE: FLANGES 2"

DELTA UV - ES SERIES SANITIZER*

*DENOTES OR ENGINEER'S APPROVED EQUAL

SCALE: N.T.S.

Hurst-Rosche, Inc.
SECRETARY OF STATE CONTROL NUMBER: 000602303
561 MURFREESBORO PIKE
NASHVILLE, TN
PH: 615.454.6615
www.hurst-rosche.com
HILLSBORO, IL
EAST ST. LOUIS, IL
MARION, IL
ARNOLD, MO
NEOSHO, MO

JAMES L SIEBERT REGISTERED ENGINEER AGRICULTURE COMMERCE No. 119913 STATE OF TENNESSEE

SIGNATURE
DATE 08-16-2019
LICENSE EXPIRES 05-31-2020

CEDARS OF LEBANON STATE PARK SPLASH PAD
STATE OF TENNESSEE, DEPARTMENT OF GENERAL SERVICES FOR
DEPARTMENT OF ENVIRONMENT AND CONSERVATION
LEBANON, WILSON COUNTY, TENNESSEE
SBC NO. 126/015-01-2018

MARK	DATE	DESCRIPTION

DATE: 08-16-2019
PROJECT NO: 360-3308
DESIGN: MWL | DRAWN: JJD | CHECK: JLS

PLUMBING DETAILS

P-105

ELECTRONIC TIMER & FEATURE CONTROLLER SCHEDULE

TAG	LOCATION	DESIGN BASE MANUFACTURER AND MODEL NUMBER	VOLT/PHASE	NOTES
TB–1	EQUIPMENT AREA	RAINDECK RD550–1	120 / 1	1 – 6
FC–1	EQUIPMENT AREA	RAINDECK RD500–0	120 / 1	1 – 6

NOTE:
1. COORDINATE EXACT LOCATION WITH A/E AND OWNER.
2. TB-1 & FC-1 SHALL FUNCTION AS A SYSTEM TO CONTROL THE OPERATION OF THE FEATURE PUMP, TOUCH ACTIVATOR AND SOLENOID VALVES. SYSTEM SHALL HAVE A MINIMUM OF FOUR (4) PREPROGRAMMED SELECTIONS.
3. FURNISH AND INSTALL LOW VOLTAGE WIRING IN OUTDOOR RATED FLEXIBLE CONDUIT TO EACH SOLENOID VALVE IN THE ASSOCIATED HEADER(S).
4. FURNISH AND INSTALL LOW VOLTAGE WIRING IN UNDERGROUND CONDUIT TO TOUCH ACTIVATOR.
5. FURNISH AND INSTALL HEADERS WITH SOLENOID VALVES AND FLOW BALANCING VALVES FOR EACH ZONE AS AS SHOWN ON DRAWINGS. MOUNT HEADERS ON UNISTRUT STAND.
6. FURNISH AND INSTALL ALL COMPONENTS FOR A COMPLETE OPERATIONAL SYSTEM.

SAND FILTER SCHEDULE

TAG	LOCATION	DESIGN BASE MANUFACTURER AND MODEL NUMBER	BACKWASH FLOWRATE (G.P.M.)	FILTER AREA (SQ.FT.)	8 HR.TURNOVER CAPACITY (GALLONS)	REQUIRED SAND (POUNDS)	NOTES
F–1/F–2	EQUIPMENT AREA	PENTAIR TR–140	141	7.06	67,680	92.5	1–5

NOTE:
1. COORDINATE EXACT LOCATION WITH A/E AND OWNER.
2. FILTERS SHALL BE NSF LISTED.
3. FURNISH AND INSTALL INLET AND OUTLET PRESSURE GAUGES, UNIONS AT INLET AND OUTLET, MULTI-PORT VALVE AND SIGHT GLASS TO DETERMINE CLARITY OF BACKWASH.
4. FURNISH AND INSTALL FLOWMETERS ON FILTER INLET SUPPLY PIPING AND BACKWASH PIPING. METERS SHALL BE INSTALLED A MINIMUM OF 36" DOWNSTREAM OF ALL VALVES AND A MINIMUM OF 18" UPSTREAM OF ALL BENDS.
5. FILTER MEDIA SHALL BE AS SPECIFIED BY THE FILTER MANUFACTURER.

CHEMICAL CONTROLLER SCHEDULE

TAG	LOCATION	DESIGN BASE MANUFACTURER AND MODEL NUMBER	SENSORS	VOLT/PHASE	NOTES
CC–1	EQUIPMENT AREA	RAINDECK IPS M790	pH / ORP	120 / 1	1 – 6

NOTE:
1. COORDINATE EXACT LOCATION WITH A/E AND OWNER.
2. SYSTEM SHALL BE NSF CERTIFIED.
3. FURNISH AND INSTALL TWO (2) COMPATIBLE ADJUSTABLE POSITIVE DISPLACEMENT VARIABLE FLOW CHEMICAL FEED PUMPS WITH 15 GALLON TANKS AND 50 GALLONS OF CHEMICAL FOR PH AND ORP. FEED TANKS AND PUMPS SHALL BE LABELED WITH THE CHEMICAL PROVIDED.
4. FURNISH AND INSTALL FLOWCELL, SENSORS, FLOW SWITCH, CHECK VALVE/INJECTORS, FITTINGS, TUBING, VALVES, MOUNTING BOARD AND FILTERS FOR A COMPLETE OPERATIONAL SYSTEM.
5. FURNISH AND INSTALL UNISTRUT STAND FOR MOUNTING BOARD.
6. PROVIDE FACTORY STARTUP AND CONFIGURATION.

BUFFER TANK SCHEDULE

TAG	LOCATION	DESIGN BASE MANUFACTURER AND MODEL NUMBER	CAPACITY (GALLONS)	MATERIAL	NOTES
BT–1	UNDERGROUND		4000		1–4

NOTE:
1. COORDINATE EXACT LOCATION WITH A/E AND OWNER.
2. TANK DESIGN SHALL BE COORDINATED SO AS TO WITHSTAND THE APPROPRIATE OVERBURDEN REQUIREMENTS OF THE PROPOSED TANK PLACEMENT.
3. FURNISH AND INSTALL RISERS AS NEEDED AND MANHOLE COVERS.
4. FURNISH AND INSTALL AUTO-FILL VALVE ON INCOMING MAKEUP WATER LINE.

UV SANITIZER SCHEDULE

TAG	LOCATION	DESIGN BASE MANUFACTURER AND MODEL NUMBER	FLOW RATE (G.P.M.)	UV LAMPS	UV LAMP POWER CONSUMPTION (WATTS)	REACTOR DIAMETER (INCHES)	NOTES
UV–1	EQUIPMENT AREA	PENTAIR XFE–8	80	1	80	8	1

NOTE:
1. COORDINATE EXACT LOCATION WITH A/E AND OWNER.

TANK/FILTER PUMP SCHEDULE

TAG	LOCATION	DESIGN BASE MANUFACTURER AND MODEL NUMBER	FLOWRATE (G.P.M.)	FEET HEAD	HORSEPOWER	VOLT/PHASE	NOTES
TP–1	EQUIPMENT AREA	PENTAIR XFE–12	200	35	3	208–230/1	1,2

NOTE:
1. COORDINATE EXACT LOCATION WITH A/E AND OWNER.
2. PUMP TO PROVIDE TURNOVER OF TANK EVERY 20 MINUTES AT SCHEDULED FLOWRATE.

FEATURE PUMP SCHEDULE

TAG	LOCATION	DESIGN BASE MANUFACTURER AND MODEL NUMBER	FLOWRATE (G.P.M.)	FEET HEAD	HORSEPOWER	VOLT/PHASE	NOTES
FP–1	EQUIPMENT AREA	PENTAIR XFE–20	280	35	5	208–230/1	1,2
FP–2	EQUIPMENT AREA	PENTAIR XFE–20	280	35	5	208–230/1	1,2

NOTE:
1. COORDINATE EXACT LOCATION WITH A/E AND OWNER.
2. PUMP IS NOT DESIGNED TO PROVIDE FULL FLOW TO ALL FEATURES AT THE SAME TIME, DURING PUMP BALANCE ONLY ACTIVATE ENOUGH FEATURES TO ACCOUNT FOR THE FLOW IN THIS SCHEDULE.

FEATURE SCHEDULE

TAG	LOCATION	DESIGN BASE MANUFACTURER AND MODEL NUMBER	ITEM DESCRIPTION	DESIGN FLOWRATE (G.P.M.)	DESIGN PRESSURE (P.S.I.)	MOUNTING BASE TYPE	NOTES
WF–1	ALL	RAIN DECK – RD106–0	3" FAN NOZZLE	3.5	> 3	UNIVERSAL	1,2,4
WF–2	ALL	RAIN DECK – RD151–0	3" BUBBLER NOZZLE	10.5	> 5	UNIVERSAL	1,2,4
WF–3	NW, SE	RAIN DECK – RD150–0	COMMERCIAL JET	4	> 3	FOOTING BASE	1,2,4
WF–4	NW, SE	RAIN DECK – RDG301–0	TURTLE	7.5	> 10	NONE	1,2,4
WF–5	NW, SE	RAIN DECK – RDG300–0	LADY BUG	7.5	> 10	NONE	1,2,4
WF–6	CENTER	RAIN DECK – RDS317–0	DUMPING BUCKETS 4	30	> 3	FOOTING BASE	1,2,4
WF–7	NE, SE	RAIN DECK – RDS304–0	30" MINI MUSHROOM	10	> 3	FOOTING BASE	1,2,4
WF–8	CENTER	RAIN DECK – RDS333–0	WATERFALL TROUGH	35	> 5	PERMANENT FOOTING	1,2,4
WF–9	NE, SW	RAIN DECK – RDS347–0	RAIN BLASTER	10	> 5	FOOTING BASE	1,2,4
WF–10	CENTER	RAIN DECK – RDS350–0	TSUNAMI	35	> 10	PERMANENT BASE	1,2,4
WF–11	NW, CENTER, SE	RAIN DECK – RDS301–0	60" WATER UMBRELLA	45	> 5	FOOTING BASE	1,2,4
TA–1	NW	RAIN DECK – RDS550–0	TOUCH ACTIVATOR	–	–	FOOTING BASE	1,2,4
TA–2	CENTER	RAIN DECK – RDS550–0	TOUCH ACTIVATOR	–	–	FOOTING BASE	1,2,4
TA–3	SE	RAIN DECK– RDS550–0	TOUCH ACTIVATOR	–	–	FOOTING BASE	1,2,4

NOTE:
1. COORDINATE EXACT LOCATION WITH A/E AND OWNER.
2. FEATURES TO BE MADE OF 304 STAINLESS STEEL WITH CARDINAL OR PRISMATIC POWDER COATING. BUCKET FEATURES OR CANOPIES SHALL BE MADE FROM FIBERGLASS AND PAINTED WITH A AUTOMOTIVE UV INHIBITOR PAINT. INSTALL WATER FEATURES BY MANUFACTURERS WRITTEN INSTALLATION INSTRUCTIONS.
3. FURNISH AND INSTALL 18 / 2 CONDUCTOR IN CONDUIT BELOW GROUND FROM TOUCH ACTIVATOR TO FEATURE CONTROLLER.
4. OR MANUFACTURERS' EQUAL

Hurst-Rosche, Inc.
SECRETARY OF STATE CONTROL NUMBER: 000902303
561 MURFREESBORO PIKE
NASHVILLE, TN
PH: 615.454.6615
www.hurst-rosche.com
HILLSBORO, IL
EAST ST. LOUIS, IL
MARION, IL
ARNOLD, MO
NEOSHO, MO

JAMES L SIEFERT REGISTERED ENGINEER AGRICULTURE COMMERCE No. 119912 STATE OF TENNESSEE

SIGNATURE
08-16-2019
DATE
04-30-2021
LICENSE EXPIRES

CEDARS OF LEBANON STATE PARK SPLASH PAD
STATE OF TENNESSEE, DEPARTMENT OF GENERAL SERVICES FOR
DEPARTMENT OF ENVIRONMENT AND CONSERVATION
LEBANON, WILSON COUNTY, TENNESSEE
SBC NO. 126/015-01-2018

MARK	DATE	DESCRIPTION

DATE: 08-16-2019
PROJECT NO: 360-3308

DESIGN:	DRAWN:	CHECK:
MWL	JJD	JLS

PLUMBING DETAILS AND SCHEDULES

P-106

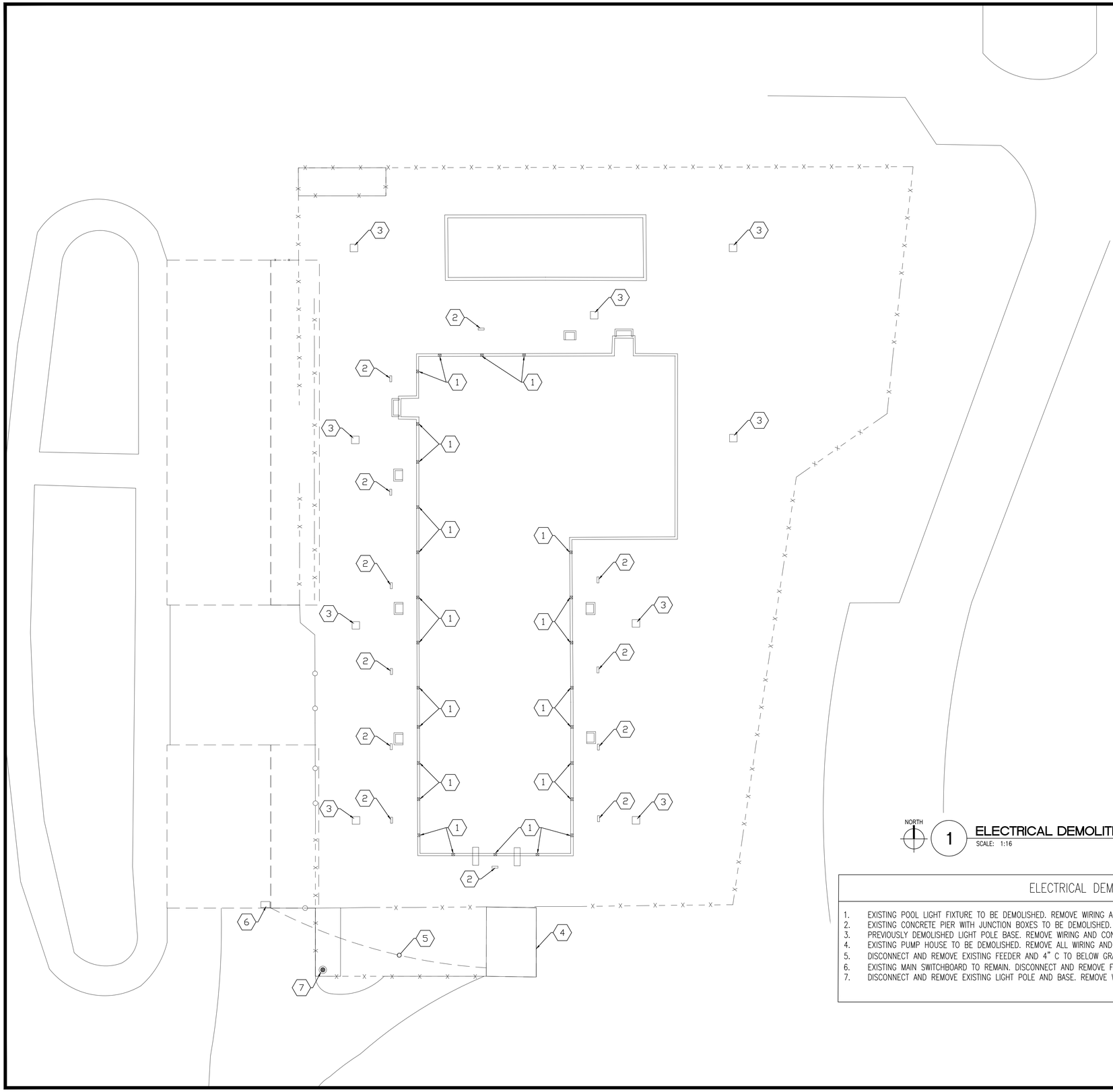

NORTH

1 ELECTRICAL DEMOLITION PLAN
SCALE: 1:16

ELECTRICAL DEMOLITION KEYED NOTES (#)

1. EXISTING POOL LIGHT FIXTURE TO BE DEMOLISHED. REMOVE WIRING AND CONDUIT TO BELOW GRADE AND CLEAR OF EXCAVATION.
2. EXISTING CONCRETE PIER WITH JUNCTION BOXES TO BE DEMOLISHED. REMOVE WIRING AND CONDUIT TO BELOW GRADE AND CLEAR OF EXCAVATION.
3. PREVIOUSLY DEMOLISHED LIGHT POLE BASE. REMOVE WIRING AND CONDUIT AS NEEDED.
4. EXISTING PUMP HOUSE TO BE DEMOLISHED. REMOVE ALL WIRING AND CONDUIT BEING SERVED FROM HERE TO BELOW GRADE AND CLEAR OF EXCAVATION.
5. DISCONNECT AND REMOVE EXISTING FEEDER AND 4" C TO BELOW GRADE AND CLEAR OF EXCAVATION.
6. EXISTING MAIN SWITCHBOARD TO REMAIN. DISCONNECT AND REMOVE FEEDER SERVING PANEL "X" IN THE EXISTING PUMP HOUSE TO BELOW GRADE.
7. DISCONNECT AND REMOVE EXISTING LIGHT POLE AND BASE. REMOVE WIRING AND CONDUIT TO BELOW GRADE AND CLEAR OF EXCAVATION.

HR
Hurst-Rosche, Inc.
SECRETARY OF STATE CONTROL NUMBER: 000602303
561 MURFREESBORO PIKE
NASHVILLE, TN
PH: 615.454.6615
www.hurst-rosche.com
HILLSBORO, IL
EAST ST. LOUIS, IL
MARION, IL
ARNOLD, MO
NEOSHO, MO

LORI A. WALTERS
REGISTERED ENGINEER
AGRICULTURE
COMMERCE
NO. 110192
STATE OF TENNESSEE

SIGNATURE
DATE
LICENSE EXPIRES 08-31-2019

CEDARS OF LEBANON STATE PARK SPLASH PAD
STATE OF TENNESSEE, DEPARTMENT OF GENERAL SERVICES FOR
DEPARTMENT OF ENVIRONMENT AND CONSERVATION
LEBANON, WILSON COUNTY, TENNESSEE
SBC NO. 126/015-01-2018

MARK	DATE	DESCRIPTION

DATE: 08-16-2019
PROJECT NO: 360-3308

DESIGN:	DRAWN:	CHECK:
LS	LS	LW

SITE ELECTRICAL DEMOLITION PLAN

ED-101

Panel	SP				OC Type		100A MCB				Voltage L-L		208
Device	MOLDED CASE				Enclosure		NEMA 1				Voltage L-N		120
Mounting	SURFACE				Comments						Amperage Rating		100

Ckt No.	Description	Type	Load	CB	Pole	PH	PH	Pole	CB	Load	Type	Description	Ckt No.
1	TP-1 (TANK PUMP)	9	1248	25	2	A	A	1	20	500	3	TB-1 (TIMER BOX)	2
3		9	1248	-	-	B	B	1	20	500	3	FC-1 (FEATURE CONTROLLER)	4
5	FP-1 (FEATURE PUMP)	9	1768	35	2	C	C	1	20	500	3	CC-1 (CHEM CONTROLLER)	6
7		9	1768	-	-	A	A	2	25	1875	4	ELECTRIC HEATER	8
9	FP-2 (FEATURE PUMP)	9	1768	35	2	B	B	-	-	1875	4		10
11		9	1768	-	-	C	C	1	20			SPARE BREAKER	12
13	L - PUMP HOUSE	2	100	20	1	A	A	1	20			SPARE BREAKER	14
15	L - SPLASH PAD	2	1120	20	2	B	B	1	20			SPARE BREAKER	16
17		2	1120	-	-	C	C					SPACE	18
19	R - GENERAL RECEPTACLES	3	360	20	1	A	A					SPACE	20
21	SPACE					B	B					SPACE	22
23	SPACE					C	C					SPACE	24
25	SPD (SURGE PROTECTION)	5	17	30	3	A	A					SPACE	26
27		5	17	-	-	B	B					SPACE	28
29		5	17	-	-	C	C					SPACE	30

Phase A	5868	VA			
Phase B	6528	VA			
Phase C	5173	VA			
Total kVa=	17.6	Demand kVa	12.9		
Total Amps	48.8	Demand Amps	35.8		

NOTES:

R=RECEPTACLE CIRCUIT
L=LIGHTING CIRCUIT
A.I.C. RATING: 22000 (VERIFY WITH UTILITY)

LIGHTING FIXTURE SCHEDULE

TYPE	DESCRIPTION	MANUFACTURER MODEL	VOLTAGE	LAMPS	MOUNTING	NOTES
A	AREA POLE LIGHT - LED SINGLE ARM MOUNT, DARK BRONZE	MCGRAW EDISON GLEON-AF-05-LED-E1-T4FT BZ	208V	LED, 279W 30000 LUMENS 4000K	POLE	
A (POLE)	15' SQUARE ALUMINUM POLE SQUARE STRAIGHT ALUMINUM, 4" SHAFT 0.125" WALL THICKNESS	MCGRAW EDISON SSA4T15W		MAX EPA 4.2 AT 90MPH	CONCRETE STANDARD	
B	4' LED STRIPLIGHT - STANDARD OUTPUT SEMI-FROST LENS	METALUX 4SNLED-LD5-49SL-LN-UNV-L835-CD1-U	120V	LED, 38W 4903 LUMENS 3500K	CEILING CHAIN OR SURFACE	
C	EXTERIOR WALL SCONCE - LARGE LED, 3000K, 90 CRI	WAC LIGHTING WS-W24513-BZ	120V	LED, 10W 744 LUMENS 3000K	WALL ADJACENT TO DOORS	

NOTES:

1 AREA POLE LIGHT "A"
SCALE: N/A

2 STRIPLIGHT "B"
SCALE: N/A

3 SCONCE "C"
SCALE: N/A

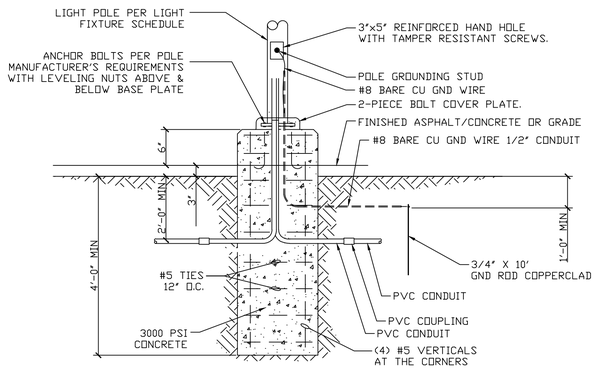

4 AREA LIGHT POLE BASE DETAIL
SCALE: NTS

ELECTRICAL GENERAL NOTES:

1. ALL WORK SHALL CONFORM TO THE LATEST EDITION OF THE NATIONAL FIRE PROTECTION ASSOCIATION (NFPA) 70, NATIONAL ELECTRICAL CODE.
2. ALL SINGLE PHASE BRANCH CIRCUITS (RECEPTACLES, LIGHTING, ETC.) ARE 3/4" CONDUIT OR EMT WITH (3)#12 BLACK/WHITE/GREEN, THHN, 90 DEGREES C WIRING. ALL OTHER CONDUIT AND WIRING SHALL BE AS INDICATED ON THE PLANS. ACTUAL ROUTING AND HOMERUN GROUPINGS ARE TO BE DETERMINED IN THE FIELD. ALL WIRING SHALL BE COPPER.
3. ELECTRICAL DRAWINGS ARE DIAGRAMMATIC EXCEPT FOR DETAILS AND ELEVATIONS. DO NOT SCALE FROM DIAGRAMMATIC DRAWINGS. EXACT LOCATIONS OF DEVICES AND PANELS ARE TO BE DETERMINED AND ROUGHED-IN DURING CONSTRUCTION TO AVOID INTERFERENCE, TO MEET USER REQUIREMENTS, TO PROVIDE ADEQUATE MOUNTING, AND TO MEET NEC LINEAR ACCESS AND CLEARANCE REQUIREMENTS.
4. VERIFY EXACT LOCATIONS OF MOTORS AND EQUIPMENT BEFORE ROUGHING IN. VERIFY ALL NEW RECEPTACLE LOCATIONS AND RECEPTACLE TYPES WITH OWNER AND VENDOR PRIOR TO CONSTRUCTION.
5. FINAL CONNECTIONS TO ALL PUMPS AND OTHER EQUIPMENT DEVICES WHICH VIBRATE SHALL BE MADE WITH FLEXIBLE SEALTITE AND APPROPRIATE WIRING. EXCEPTIONS TO THIS WILL BE THOSE CONNECTIONS MADE IN HAZARDOUS LOCATIONS. CONNECTIONS IN HAZARDOUS LOCATIONS SHALL COMPLY WITH ARTICLES 500, 501, & 505 OF THE NEC.
6. IN ADDITION TO THE NEC REQUIREMENTS FOR GFCI RATED RECEPTACLES, THE FOLLOWING RECEPTACLES SHALL ALSO BE GFCI RATED: (1) ALL RECEPTACLES LOCATED WITHIN 6 FEET OF A SINK, (2) ALL RECEPTACLES WHICH ARE PROVIDED FOR CONVENIENCE IN SERVICING HVAC EQUIPMENT REGARDLESS OF LOCATION. PROVIDE INDIVIDUAL GFCI DEVICES ONLY. GFCI CIRCUIT BREAKERS ARE NOT ACCEPTABLE.
7. PROVIDE A LAMICOID NAMEPLATE (WHITE LETTERS ON BLACK BACKGROUND) ON EACH PANELBOARD, MOTOR STARTER, CONTACTOR, TRANSFORMER, ETC. LETTERS SHALL BE 0.75 INCH MINIMUM.
8. TRADE NAMES ARE GIVEN TO CLARIFY TYPE OF PRODUCT AND QUALITY DESIRED.
9. CONTRACTOR SHALL CUT AS REQUIRED TO INSTALL ELECTRICAL EQUIPMENT. REPAIR OF FLOOR OR WALLS SHALL BE COORDINATED WITH GENERAL CONTRACTOR. CONTRACTOR SHALL ALSO REPAIR ALL OPENINGS LEFT DUE TO EQUIPMENT REMOVAL.
10. CONDUCTORS ARE AWG#12 COPPER UNLESS OTHERWISE SHOWN. ALL CONDUCTORS LARGER THAN #10 SHALL BE STRANDED. RUNS IN EXCESS OF 100 FEET (ONE WAY) SHALL BE SIZED PER THE NATIONAL ELECTRICAL CODE MAXIMUM 3% VOLTAGE DROP. SEE SCHEDULE, THIS SHEET.
11. PANELBOARDS SHALL CONTAIN A TYPEWRITTEN DIRECTORY WITH A PLASTIC COVER AFFIXED TO THE INSIDE OF THE DOOR. UPDATE EXISTING PANELBOARD DIRECTORIES WHERE MODIFICATIONS ARE BEING MADE.
12. ALL FIXTURES, DEVICES, CONDUIT, AND EQUIPMENT SHALL BE SECURED WITH APPROVED HANGERS AND ANCHORS AND IN ACCORDANCE WITH APPROVED STANDARDS OF INSTALLATION.
13. ALL BREAKERS SHOWN IN THE PANELBOARD SCHEDULE SHALL BE RATED AS SHOWN FOR BOTH CIRCUIT CAPACITY AND FAULT CURRENT INTERRUPTING CAPACITY.
14. ALL PANELBOARDS, DISCONNECT SWITCHES, MOTOR STARTERS, AND CONTACTORS SHALL BE NEMA 3R UNLESS OTHERWISE NOTED.
15. THESE DRAWINGS HAVE BEEN DEVELOPED FROM THE BEST AVAILABLE INFORMATION. CONTRACTOR SHALL FIELD VERIFY ALL EXISTING JOB SITE CONDITIONS. CARE SHALL BE TAKEN DURING DEMOLITION TO AVOID DAMAGE TO ADJACENT AREA.

ELECTRICAL LEGEND

SYMBOL	DESCRIPTION	MTG. HT.
	CONCEALED CONDUIT & CIRCUITRY	NA
	CONCEALED CONDUIT & CIRCUITRY HOMERUN TO PANELBOARD AND BREAKER NUMBER AS INDICATED	NA
	CONDUIT BELOW GRADE ON SITE	NA
	EXPOSED CONDUIT ON WALL OR CEILING	NA
A	EXTERIOR DECORATIVE POLE LIGHT (LETTER DENOTES TYPE, REFER TO LIGHT FIXTURE SCHEDULE)	AS INDICATED
A	NOTE REFERENCE - REFER TO NOTE INDICATED	NA
PC	PHOTOCELL	
	120V. DUPLEX RECEPTACLE (G=GFCI, WP=WEATHERPROOF, T=TAMPER RESISTANT)	1'-6" AFF
J	JUNCTION BOX	SEE SPEC'S
S_M	MANUAL MOTOR RATED SWITCH, 120V FRACTIONAL HP NEMA 1 UON	
	NON-FUSED DISCONNECT - VOLT/POLE/AMP/NEMA RATING AS INDICATED (NEMA 1 UON)	
	FUSED DISCONNECT - VOLT/POLE/AMP/NEMA RATING AS INDICATED FUSED PER MANUFACTURER REQUIREMENTS (NEMA 1 UON)	
	COMBINATION ACROSS THE LINE MOTOR STARTER (NEMA 1 UON)	
MP	SURFACE MOUNTED PANELBOARD WITH DESIGNATION - SEE SCHEDULE	
M	ELECTRIC MOTOR	

ABBREVIATIONS

ABBREVIATION	MEANING
A	AMPS
AFF	ABOVE FINISHED FLOOR
AFG	ABOVE FINISHED GRADE
C	CAMERA (COORDINATE EXACT ROUGH-IN WITH DIEBOLD EQUIPMENT DRAWINGS)
FBO	FURNISHED BY OTHERS
FPMR	FUSE PER MANUFACTURER'S RECOMMENDATIONS
G, GFCI	GROUND FAULT CIRCUIT INTERRUPTER
HP	HORSEPOWER
MTD	MOUNTED
NA	NOT APPLICABLE
NF	NON-FUSED
NIC	NOT IN CONTRACT
NL	NIGHTLIGHT - PROVIDE UNSWITCHED HOT TO LIGHTING FIXTURE
S	SAFETY TYPE RECEPTACLE
TV	TELEVISION CONNECTION - MOUNTING HT @ 84" AFF U.N.O.
UON	UNLESS OTHERWISE NOTED
V	VOLTS
VA	VOLT-AMPS
W	WATTS
WP	WEATHER PROOF
XFMR	TRANSFORMER
X	X
X	X

MAXIMUM BRANCH CIRCUIT LENGTH
FOR SINGLE-PHASE LOADS (IN FEET)

MAXIMUM ALLOWABLE VOLTAGE DROP	3%					
BRANCH CIRCUIT VOLTAGE	120V		208V		277V	
	BRANCH CIRCUIT BREAKER		BRANCH CIRCUIT BREAKER		BRANCH CIRCUIT BREAKER	
CONDUCTOR WIRE SIZE (AWG)	20A/1P	30A/1P	20A/1P	30A/1P	20A/1P	30A/1P
#12	60	N/A	105	N/A	140	N/A
#10	95	65	170	110	225	150
#8	150	95	260	170	345	230
#6	235	150	410	270	545	360
#4	365	245	635	425	850	565
#3	465	310	810	540	1,080	720
#2	560	375	975	650	1,295	865
#1	700	465	1,215	810	1,620	1,080

NOTES:
1. CALCULATIONS BASED ON LOAD 80% OF BRANCH BREAKER SIZE.
2. VOLTAGE DROP BASED ON 0.95 POWER FACTOR.
3. BRANCH CIRCUIT LENGTH VALUES INDICATED ARE WIRE DISTANCE FROM PANELBOARD TO LOAD

ALL BRANCH CIRCUITS TO MAINTAIN A MAXIMUM VOLTAGE DROP OF 3%.
ADJUST BRANCH CIRCUIT WIRE SIZE PER MAXIMUM BRANCH CIRCUIT LENGTH.

Hurst-Rosche, Inc.
SECRETARY OF STATE CONTROL NUMBER: 000902303
561 MURFREESBORO PIKE
NASHVILLE, TN
PH: 615.454.6615
www.hurst-rosche.com
HILLSBORO, IL
EAST ST. LOUIS, IL
MARION, IL
ARNOLD, MO
NEOSHO, MO

LORI A. WALTERS
REGISTERED
AGRICULTURE
COMMERCE
STATE OF TENNESSEE

SIGNATURE
DATE
LICENSE EXPIRES 08-31-2019

CEDARS OF LEBANON STATE PARK SPLASH PAD
STATE OF TENNESSEE, DEPARTMENT OF GENERAL SERVICES FOR
DEPARTMENT OF ENVIRONMENT AND CONSERVATION
LEBANON, WILSON COUNTY, TENNESSEE
SBC NO. 126/015-01-2018

MARK	DATE	DESCRIPTION

DATE: 08-16-2019
PROJECT NO: 360-3308
DESIGN: LS | DRAWN: LS | CHECK: LW

ELECTRICAL GENERAL NOTES & SCHEDULES

E-101

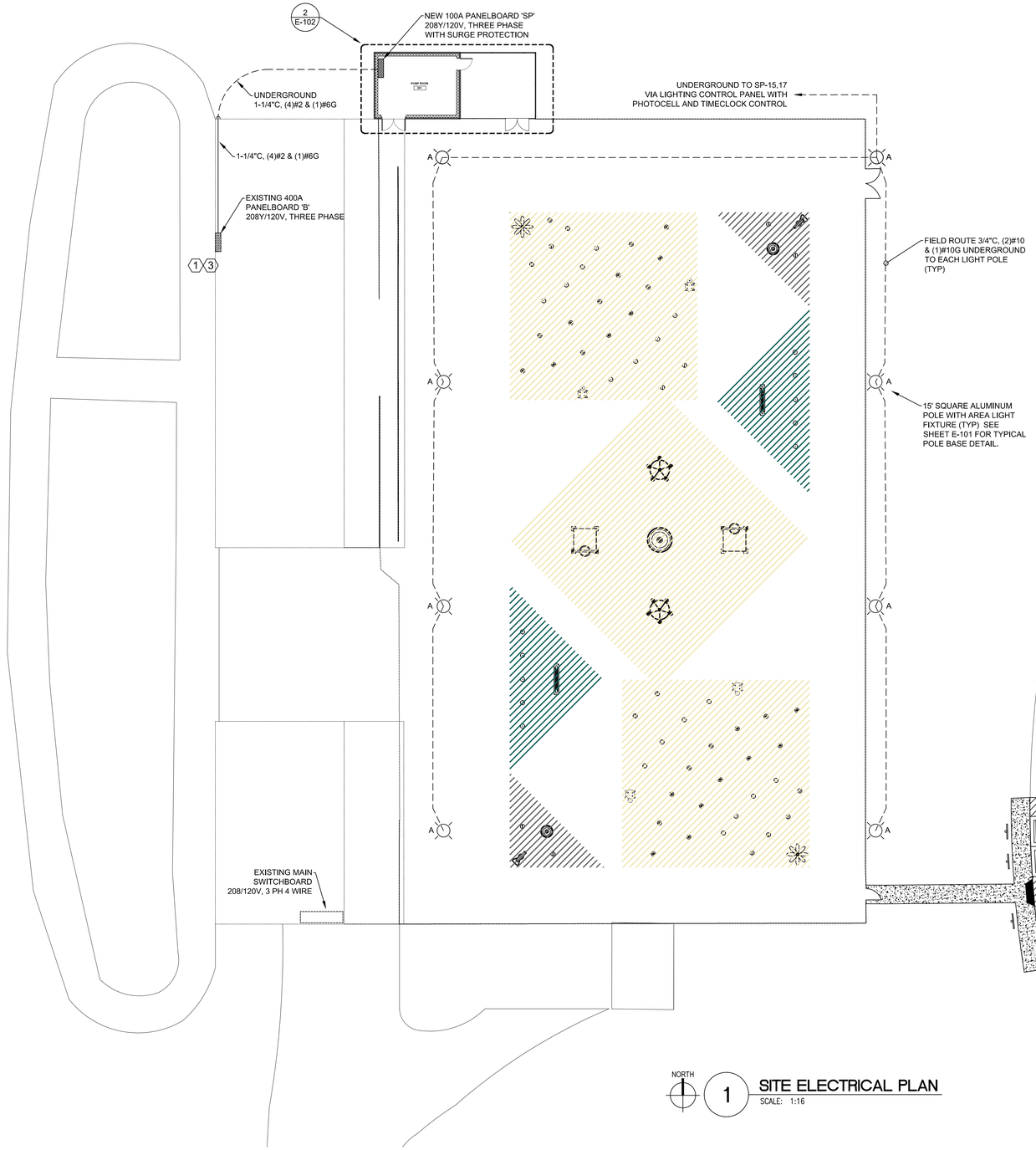

NORTH 1 **SITE ELECTRICAL PLAN**
SCALE: 1:16

ELECTRICAL NEW CONSTRUCTION KEYED NOTES ⟨#⟩

1. INSTALL NEW 100A, 3–POLE CIRCUIT BREAKER IN EXISTING SPACE FOR NEW PUMP HOUSE PANELBOARD 'SP'. EXISTING PANELBOARD IS SQUARE D TYPE NQO. VERIFY AIC RATING AND PROVIDE CIRCUIT BREAKER COMPATIBLE WITH EXISTING PANELBOARD. PROVIDE AND INSTALL BLANK COVER FOR ANY REMAINING OPENING.
2. EQUIPMENT NOT SHOWN IN EXACT LOCATION. COORDINATE EXACT REQUIRED LOCATION OF ALL EQUIPMENT WITH SYSTEM VENDOR/INSTALLER PRIOR TO ROUGH–IN. RELOCATE AS REQUIRED FOR PIPING AND EQUIPMENT LAYOUTS.
3. ALTERNATE PRICING: CONTRACTOR TO PRICE REPLACING EXISTING 400A, 208/120V, 3PH, 4W PANELBOARD 'B' AS AN ALTERNATE IN THE EVENT THE EXISTING PANELBOARD IS DAMAGED DUE TO AGE AND ENVIRONMENT.
4. PROVIDE AND INSTALL LIGHTING CONTROL OR RELAY PANEL WITH PHOTOCELL AND TIMECLOCK CONTROL FOR EXTERIOR LIGHTING INCLUSIVE OF PUMP HOUSE WALL SCONCES AND AREA POLE LIGHTING.
5. ELECTRIC UNIT HEATER MOUNTED HIGH IN SOUTHEAST CORNER OF BUILDING. PROVIDE AND INSTALL 240V, 2–POLE, 30A DISCONNECT SWITCH ON WALL ADJACENT TO HEATER. CIRCUITING WILL BE FED FROM PANELBOARD 'SP', CIRCUITS 8,10. CONDUIT/WIRE SHALL BE 3/4"C, (2)#10 & (1)#10G.

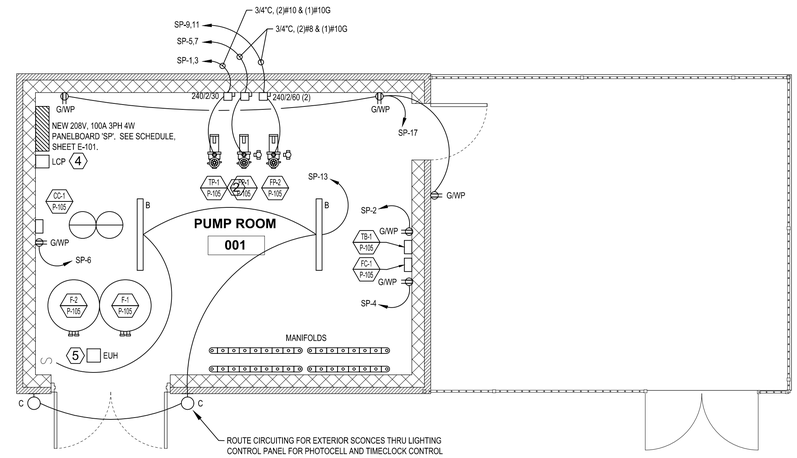

NORTH 2 **ENLARGED PUMP AREA ELECTRICAL PLAN**
SCALE: 1:4

Hurst-Rosche, Inc.
SECRETARY OF STATE CONTROL NUMBER: 000902303
561 MURFREESBORO PIKE
NASHVILLE, TN
PH: 615.454.6615
www.hurst-rosche.com
HILLSBORO, IL
EAST ST. LOUIS, IL
MARION, IL
ARNOLD, MO
NEOSHO, MO

LORI A. WALTERS — REGISTERED — AGRICULTURE — COMMERCE — ENGINEER — STATE OF TENNESSEE

SIGNATURE

DATE

LICENSE EXPIRES 08-31-2019

CEDARS OF LEBANON STATE PARK SPLASH PAD
STATE OF TENNESSEE, DEPARTMENT OF GENERAL SERVICES FOR
DEPARTMENT OF ENVIRONMENT AND CONSERVATION
LEBANON, WILSON COUNTY, TENNESSEE
SBC NO. 126/015-01-2018

MARK	DATE	DESCRIPTION

DATE: 08-16-2019
PROJECT NO: 360-3308

DESIGN:	DRAWN:	CHECK:
LS	LS	LW

SITE
ELECTRICAL PLAN

E-102