REGION 3 HEADQUARTERS BUILDINGS REROOF

REGION 3- MIDDLE TENNESSEE
NASHVILLE, DAVIDSON COUNTY, TENNESSEE
SBC No. 243/020-03-2020

VICINITY MAP

STATE OF TENNESSEE ADOPTED CODES AND STANDARDS FOLLOWED (BUT NOT LIMITED TO):

- INTERNATIONAL BUILDING CODE (IBC), 2012 EXCEPT FOR: CH 11 ACCESSIBILITY; AND CH 34, SECTION 3411 ACCESSIBILITY FOR EXISTING BUILDINGS)
- INTERNATIONAL FUEL GAS CODE (IFGC), 2012
- INTERNATIONAL MECHANICAL CODE (IMC), 2012
- INTERNATIONAL PLUMBING CODE (IPC), 2012
- INTERNATIONAL PROPERTY MAINTENANCE CODE (IPMC), 2012
- INTERNATIONAL FIRE CODE (IFC), 2012
- INTERNATIONAL ENERGY CONSERVATION CODE (IECC), 2012 EXCEPT THAT THE PROVISIONS OF THE IECC, 2006 SHALL APPLY TO THE FOLLOWING OCCUPANCY CLASSIFICATION AS DEFINED BY THE IBC, 2021: GROUP F-1, F-2, S-1, S-2
- INTERNATIONAL EXISTING BUILDING CODE (IEBC), 2012
- NATIONAL ELECTRIC CODE (NEC), NFPA 70, 2017
- 2010 ADA STANDARDS FOR ACCESSIBLE DESIGN (FOR BUILDINGS REQUIRED TO COMPLY WITH TENNESSEE PUBLIC BUILDING ACCESSIBILITY ACT)
- NFPA 101 LIFE SAFETY CODE, 2012

COMPLY WITH ALL LOCAL APPLICABLE CODES PER AUTHORITY HAVING JURISDICTION.

RESPONDING FIRE DEPARTMENT:

WILLIAM SWANN, FIRE CHIEF
NASHVILLE FIRE DEPARTMENT - STATION 23
6215 CENTENNIAL BLVD
NASHVILLE, TN 37209

ARCHITECT / ENGINEER

Hurst-Rosche, Inc.

PROFFESIONAL DESIGN NUMBER: 184-000298

561 Murfreesboro Pike
Nashville, TN 37210
615.454.6615
www.hurst-rosche.com

HILLSBORO, IL
EAST St. LOUIS, IL
MARION, IL
ARNOLD, MO
NEOSHO, MO

OWNER
STATE OF TENNESSEE
DEPARTMENT OF GENERAL SERVICES
FOR THE
DEPARTMENT OF TRANSPORTATION

PROJECT PHYSICAL ADDRESS:
6601 CENTENNIAL BLVD
NASHVILLE, TN 37209

INDEX OF SHEETS

GENERAL

G-101	COVER SHEET
G-102	ABBREVIATIONS AND GENERAL NOTES
G-103	SITE PLAN

ARCHITECTURAL

A-101	BUILDING A ROOF PLAN
A-102	BUILDING B ROOF PLAN
A-103A	PARTIAL BUILDING E ROOF PLAN
A-103B	PARTIAL BUILDING E ROOF PLAN
A-104	BUILDING F ROOF PLAN
A-501	DETAILS
A-502	DETAILS
A-601	DOOR SCHEDULE AND DETAILS

DEBORAH M. LUNDBERG
REGISTERED ARCHITECT
No. 103440
STATE OF TENNESSEE

DEBORAH M. LUNDBERG, AIA

DATE: 04/13/2021

LICENSE EXPIRES: 05/31/2022

TENNESSEE 811 (TN ONE CALL)
ALWAYS CALL 811 BEFORE YOU DIG!!!
1-800-351-1111

DATE: 04/13/2021

HR# 520-0211

ABBREVIATIONS

ABV	ABOVE
AFF	ABOVE FINISH FLOOR
ACC	ACCESS
AP	ACCESS PANEL
AC	ACOUSTICAL
ACT	ACOUSTICAL CEILING TILE
ADH	ADHESIVE
ADJ	ADJACENT
ADJT	ADJUSTABLE
ALT	ALTERNATE, ALTERNATIVE
AL	ALUMINUM
ANC	ANCHOR, ANCHORAGE
AB	ANCHOR BOLT
ARCH	ARCHITECT (URAL)
AD	AREA DRAIN
ASPH	ASPHALT
AUTO	AUTOMATIC
BRG	BEARING
BPL	BEARING PLATE
BM	BENCH MARK, BEAM
BEL	BELOW
BTWN	BETWEEN
BVL	BEVELED
BLK	BLOCK
BLKG	BLOCKING
BD	BOARD
BS	BOTH SIDES
BW	BOTH WAYS
BOT	BOTTOM
BLDG	BUILDING
BL	BRICK LEDGE
CAB	CABINET
CPT	CARPET (ED)
CSMT	CASEMENT
CK	CAULKING
CLG	CEILING
CEM	CEMENT
CT	CERAMIC TILE
CIR	CIRCLE
CLR	CLEAR (ANCE)
CLS	CLOSURE
COL	COLUMN
COMB	COMBINATION
COMP	COMPRESS (ED), (ION), (IBLE)
CONC	CONCRETE
CMU	CONCRETE MASONRY UNIT
CONST	CONSTRUCTION
CONT	CONTINUOUS
CONTR	CONTRACT (OR)
CJ	CONTROL JOINT
CPR	COPPER
CG	CORNER GUARD
CTR	CENTER
CFL	COUNTERFLASHING
CS	COUNTERSINK
CF	CUBIC FOOT
CY	CUBIC YARD
DL	DEAD LOAD
DEM	DEMOLISH, DEMOLITION
DTL	DETAIL
DIAM	DIAMETER
DIM	DIMENSION
DIV	DIVISION
DR	DOOR
DBL	DOUBLE
DH	DOUBLE HUNG
DWL	DOWEL(S)
DS	DOWNSPOUT
DT	DRAIN TILE
DWR	DRAWER
DWG	DRAWING

EF	EACH FACE
ELEC	ELECTRIC (AL)
EP	ELECTRICAL PANELBOARD
EL	ELEVATION
ENC	ENCLOSE (URE)
EQ	EQUAL
EQP	EQUIPMENT
EST	ESTIMATE
EXH	EXHAUST
EXG	EXISTING
EJ	EXPANSION JOINT
EXP	EXPOSED
EXT	EXTERIOR
EWF	ELECTRIC WATER FOUNTAIN
FOC	FACE OF CONCRETE
FOF	FACE OF FINISH
FOM	FACE OF MASONRY
FOS	FACE OF STUDS
FAS	FASTEN, FASTENER
FBD	FIBERBOARD
FGL	FIBERGLASS
FIN	FINISH (ED)
FFE	FINISHED FLOOR ELEVATION
FFL	FINISHED FLOOR LINE
FA	FIRE ALARM
FE	FIRE EXTINGUISHER
FEC	FIRE EXTINGUISHER CABINET
FPL	FIREPLACE
FP	FIREPROOF
FRT	FIRE-RETARDANT
FLG	FLASHING
FLX	FLEXIBLE
FLR	FLOOR (ING)
FD	FLOOR DRAIN
FPL	FLOOR PLATE
FLUR	FLUORESCENT
FJT	FLUSH JOINT
FTG	FOOTING
FND	FOUNDATION
FR	FRAME (D), (ING)
FS	FULL SIZE
FBO	FURNISHED BY OTHERS
FUR	FURRED (ING)
GA	GAGE, GAUGE
GALV	GALVANIZED
GC	GENERAL CONTRACT (OR)
GLF	GLASS FIBER
GB	GRAB BAR
GR	GRADE, GRADING
GVL	GRAVEL
GRT	GROUT
GYP BD	GYPSUM BOARD
HDW	HARDWARE
HWD	HARDWOOD
HDR	HEADER
HTG	HEATING
HD	HEAVY DUTY
HT	HEIGHT
HC	HOLLOW CORE
HM	HOLLOW METAL
HORIZ	HORIZONTAL
HB	HOSE BIB
HWH	HOT WATER HEATER
IN	INCH
INCL	INCLUDING
ID	INSIDE DIAMETER
IF	INSIDE FACE
INS	INSULATE (D), (ION)
INT	INTERIOR

JT	JOINT
JF	JOINT FILLER
J	JOIST
KPL	KICKPLATE
LBL	LABEL
LBP	LEAD-BASED PAINT
LAM	LAMINATE (D)
LAV	LAVATORY
LH	LEFT HAND
L	LENGTH
LT	LIGHT
LW	LIGHTWEIGHT
LF	LINEAL FEET
LTL	LINTEL
LL	LIVE LOAD
LVR	LOUVER
LPT	LOW POINT
MFR	MANUFACTURE (ER)
MAS	MASONRY
MO	MASONRY OPENING
MAX	MAXIMUM
MECH	MECHANICAL
MED	MEDIUM
MBR	MEMBER
MMB	MEMBRANE
MTL	METAL
MWK	MILLWORK
MIN	MINIMUM
MISC	MISCELLANEOUS
MLD	MOLDING, MOULDING
MT	MOUNT (ED), (ING)
MOV	MOVABLE
MULL	MULLION
NAT	NATURAL
NOM	NOMINAL
NIC	NOT IN CONTRACT
NTS	NOT TO SCALE
OC	ON CENTER
OPG	OPENING
OPP	OPPOSITE
OD	OUTSIDE DIAMETER
OA	OVERALL
OH	OVERHEAD
P	PAINT (ED)
PNL	PANEL
PAR	PARALLEL
PK	PARKING
PTN	PARTITION
PERF	PERFORATE (D)
PERI	PERIMETER
PLAS	PLASTER
PLAM	PLASTIC LAMINATE
PL	PLATE
PWD	PLYWOOD
PT	POINT
PORC.	PORCELAIN
PVC	POLYVINYL CHLORIDE
PCF	POUNDS PER CUBIC FOOT
PLF	POUNDS PER LINEAL FOOT
PSF	POUNDS PER SQUARE FOOT
PSI	POUNDS PER SQUARE INCH
PFB	PREFABRICATE (D)
PFN	PREFINISHED
PRF	PREFORMED
PL	PROPERTY LINE

RAD	RADIUS
RAN	RANGE
RL	RAIL (ING)
RE	REFERENCE
REF	REFRIDGERATOR
RFL	REFLECT (ED), (IVE), (OR)
REINF	REINFORCE (D), (ING)
REM	REMOVE
RES	RESILIENT
RVS	REVERSE (SIDE)
REV	REVISION (S), REVISED
RH	RIGHT HAND
RFG	ROOFING
RM	ROOM
RO	ROUGH OPENING
RB	RUBBER BASE
SCH	SCHEDULE
S	SEALER
SEC	SECTION
SHTG	SHEATHING
SHT	SHEET
SH	SHELF, SHELVING
SIM	SIMILAR
SL	SLEEVE
SC	SOLID CORE
SPL	SPECIAL
SPEC	SPECIFICATIONS
SQ	SQUARE
SF	SQUARE FOOT
SY	SQUARE YARD
S&V	STAINED AND VARNISHED
SST	STAINLESS STEEL
STD	STANDARD
STL	STEEL
STO	STORAGE
STRUCT	STRUCTURAL
SYM	SYMMETRY (ICAL)
SYS	SYSTEM
TEL	TELEPHONE
TV	TELEVISION
THK	THICK (NESS)
THR	THRESHOLD
TOL	TOLERANCE
T&G	TONGUE AND GROOVE
T.STL	TOP OF STEEL
TSL	TOP OF SLAB
TFTG	TOP OF FOOTING
TYP	TYPICAL
UC	UNDERCUT
UNF	UNFINISHED
VJ	V-JOINT (ED)
VB	VAPOR BARRIER
VAR	VARNISH
VNR	VENEER
VERT	VERTICAL
WP	WATERPROOFING
WR	WATER REPELLENT
WS	WATERSTOP
WWF	WELDED WIRE FABRIC
W	WIDTH, WIDE
W/	WITH
WDW	WINDOW
W/O	WITHOUT
WD	WOOD
WB	WOOD BASE

PROJECT SCOPE

THIS PROJECT CONSISTS OF: DEMOLITION AND REPLACEMENT OF THE EXISTING ROOFS ON BUILDINGS A, B, E AND F.
REPLACE THE ROOF ACCESS DOOR AT BUILDING A.

GENERAL NOTES:

1. CONTRACTOR SHALL COORDINATE ALL WORK WITH THE OWNER, ARCHITECT/ENGINEER, AND OTHER TRADES/CONTRACTORS THROUGHOUT THE COURSE OF THE PROJECT.
2. CONTRACTOR SHALL COORDINATE W/ OWNER FOR ALL OWNER RELATED SCHEDULES, PROCEDURES, CLEARANCES & REQUIREMENTS TO ACCESS THE OWNER'S FACILITIES. SUCH PROCEDURES ARE INCIDENTAL TO THE CONTRACT AND SHALL NOT RESULT IN EXTRA COSTS TO THE OWNER.
3. THE CONTRACTOR SHALL COORDINATE ALL WORK WITH THE OWNER PRIOR TO STARTING WORK.
4. THE CONTRACTOR SHALL TAKE NOTE OF ALL EXISTING SITE CONDITIONS AND BE PREPARED TO MOVE OR DISPOSE OF OBJECTS OR MATERIALS WITHIN THE LIMITS OF THE PROJECT. SUCH WORK SHALL NOT BE CAUSE FOR ADDITIONAL COMPENSATION FOR A CHANGE IN THE SCOPE.
5. CONTRACTOR SHALL FIELD VERIFY ALL EXISTING DIMENSIONS AND CONDITIONS AND MAKE MINOR ADJUSTMENTS AS NECESSARY. NOTIFY THE ARCHITECT/ENGINEER OF ANY DISCREPANCIES WHICH MAY AFFECT THE OUTCOME OF THE WORK. DIMENSIONS SHOWN ARE FROM FACE OF FINISH TO FACE OF FINISH UNLESS NOTED OTHERWISE.
6. DIMENSIONS NOTED ON DRAWINGS ARE FOR GENERAL INFORMATION ONLY. PRIOR TO SUBMITTING A BID PROPOSAL, THE CONTRACTOR SHALL THOROUGHLY SURVEY THE EXISTING SITE TO VERIFY EXISTING DIMENSIONS, CONDITIONS, AND DETERMINE ALL MATERIALS, LABOR, AND INCIDENTALS NEEDED FOR COMPLETION OF THE INTENDED CONSTRUCTION. THE CONTRACTOR SHALL VERIFY ALL EXISTING DIMENSIONS AND FIELD CONDITIONS PRIOR TO FABRICATION OR CONSTRUCTION; MAKE MINOR ADJUSTMENTS; AND NOTIFY THE ARCHITECT/ENGINEER OF ANY CONDITIONS THAT MAY AFFECT THE OUTCOME OF THE WORK.
7. AFTER ALL WORK IS COMPLETED, CONTRACTOR SHALL CLEAN WORK AREAS SO THAT THEY ARE FREE OF ANY CONSTRUCTION MATERIALS, TOOL, DIRT AND DEBRIS. FINE GRADE, FERTILIZE, SEED AND STRAW ALL DISTURBED LAWN AREAS.
8. EXISTING SITE IMPROVEMENTS DISTURBED OUTSIDE THE DESIGNATED CONSTRUCTION AREAS ARE TO BE REPLACED WITH EQUAL OR BETTER CONSTRUCTION AT THE EXPENSE OF THE CONTRACTOR. EVERY EFFORT SHALL BE MADE TO MINIMIZE SUCH DISTURBANCES.
9. INFORMATION NOTED ON DRAWINGS ARE FOR GENERAL INFORMATION ONLY. CONTRACTOR SHALL BE RESPONSIBLE FOR THE ENTIRE LAYOUT OF THE SITES AND ALL LOCATION AND DEPTHS OF EXISTING UTILITIES/COMMUNICATION LINES AND REQUIRED CLEARANCES VERTICAL/HORIZONTAL. CONTRACTOR SHALL MAKE ADJUSTMENTS TO ENSURE PROPER INSTALLATION OF REQUIRED WORK AT NO EXTRA COST TO THE OWNER.
10. EXISTING SITE VEGETATION AND CONSTRUCTION, SUCH AS SIDEWALKS, STOOPS, ETC., THAT ARE DISTURBED AND/OR DAMAGED DURING CONSTRUCTION SHALL BE REPLACED WITH EQUAL OR BETTER CONSTRUCTION AT THE EXPENSE OF THE CONTRACTOR. EVERY EFFORT SHALL BE MADE TO MINIMIZE SUCH DISTURBANCES AND DAMAGES.
11. ALL ITEMS NOTED TO REMAIN SHALL NOT BE DISTURBED AND SHALL REMAIN IN PLACE. CONTRACTOR SHALL MAKE EVERY EFFORT TO MINIMIZE ANY DISTURBANCES. IN THE EVENT EXISTING ITEMS ARE DISTURBED, CONTRACTOR SHALL REPAIR/REPLACE WITH EQUAL OR BETTER CONSTRUCTION AT THE CONTRACTOR'S EXPENSE.
12. PRIME CONTRACTOR FOR EACH BID SHALL COORDINATE REMOVAL, HAULING, AND LEGAL DISPOSAL OF ALL MATERIALS WITH SUBCONTRACTORS.
13. CONTRACTOR SHALL MAINTAIN PROJECT SITE FREE FROM CONSTRUCTION DEBRIS AS REQUIRED BY THE OWNER. COORDINATE WITH THE OWNER.
14. ALL REFUSE AND DEBRIS SHALL BE REMOVED FROM THE SITE AND LEGALLY DISPOSED OF BY THE CONTRACTOR. GENERAL CONTRACTOR SHALL COORDINATE REMOVAL, HAULING, AND LEGAL DISPOSAL OF ALL MATERIALS WITH SUBCONTRACTORS. CLEAN ALL WORK AREAS DAILY.
15. AFTER ALL WORK IS COMPLETED, CONTRACTOR SHALL CLEAN ALL AREAS AFFECTED BY CONSTRUCTION SO THAT THEY ARE FREE OF ANY CONSTRUCTION DIRT AND DEBRIS.
16. GRADE, SEED AND STRAW ANY SITE AREAS DISTURBED BY CONSTRUCTION OF THIS PROJECT IN ANY WAY.
17. NEW WORK SHALL MATCH EXISTING ADJOINING CONSTRUCTION FOR A SMOOTH TRANSITION, EXCEPT WHERE NOTED.
18. PROTECT EXISTING UTILITIES DURING CONSTRUCTION.
19. CONTRACTOR SHALL NOTIFY OWNER AND ARCHITECT/ENGINEER PRIOR TO USE OF ANY SCAFFOLDING, LIFTS, SWING STAGES, ETC. USE OF SUCH MATERIALS AND EQUIPMENT SHALL MEET ALL FEDERAL, STATE, AND LOCAL SAFETY REGULATIONS AND ORDINANCES.
20. CONTRACTOR SHALL BE RESPONSIBLE FOR ALL BUILDING/WORK PERMITS AND CERTIFICATION REQUIREMENTS. SUBMIT COPIES OF ALL PERMITS/CERTIFICATIONS TO A/E AND OWNER.
21. RECONNECT ALL ITEMS THAT WERE DISCONNECTED DURING CONSTRUCTION. ENSURE ALL CONNECTIONS ARE SAFE AND WEATHER-TIGHT.
22. ALL WORK PERFORMED & MATERIALS INSTALLED SHALL BE IN STRICT ACCORDANCE W/ ALL APPLICABLE CODES, REGULATIONS AND ORDINANCES. CONTRACTOR SHALL COMPLY WITH ALL LAWS, ORDINANCES, RULES, REGULATIONS AND LAWFUL ORDERS OF ANY PUBLIC AUTHORITY BEARING ON THE PERFORMANCE OF THE WORK. MECHANICAL AND ELECTRICAL SYSTEMS SHALL BE INSTALLED IN ACCORDANCE WITH ALL APPLICABLE MUNICIPAL AND UTILITY COMPANY SPECIFICATIONS, AND LOCAL OR STATED JURISDICTIONAL CODES, ORDINANCES AND REGULATIONS.
23. THE TERM ARCHITECT, ENGINEER OR CONSULTANT ARE ALL SYNONYMOUS WITH THE TERM DESIGNER.
24. IF DISCREPANCY ARISES BETWEEN INFORMATION IN THE SPECIFICATIONS AND THE INFORMATION ON THE DRAWINGS, THE MORE STRINGENT CONDITION SHALL APPLY.

ROOF AREAS

BUILDING	LOCATION	APPROX. SQ. FT.
A	MAIN ROOF	16,000
A	EAST STAIRWELL	250
A	WEST STAIRWELL	250
B	MAIN ROOF	31,500
B	UPPER ROOF	7,000
B	METAL ROOF	1,300
E	MAIN ROOF	32,700
E	UPPER ROOF	14,000

ROOF AREAS

BUILDING	LOCATION	APPROX. SQ. FT.
E	LOW ROOF	1,100
E	SMALL ROOF 1	225
E	SMALL ROOF 2	160
F	MAIN ROOF	12,500
F	SMALL ROOF	2,050
F	LOWER ROOF	4,500

ROOF R-VALUE TO BE R-30 MINIMUM.

Hurst-Rosche, Inc.
PROFESSIONAL DESIGN NUMBER: 000372
561 MURFREESBORO PIKE
NASHVILLE, TN
PH: 615.454.6615
www.hurst-rosche.com
EAST ST. LOUIS, IL
MARION, IL
ARNOLD, MO
NEOSHO, MO
NASHVILLE, TN

DEBORAH M. LUNDBERG
REGISTERED ARCHITECT
No. 103344
STATE OF TENNESSEE

SIGNATURE
04-13-2021
DATE
05-31-2022
LICENSE EXPIRES

REGION 3 HEADQUARTERS BUILDING REROOF
REGION 3 - MIDDLE TENNESSEE
NASHVILLE, DAVIDSON COUNTY, TENNESSEE
SBC No. 243/020-03-2020

MARK	DATE	DESCRIPTION

DATE: 04-13-2021
PROJECT NO: 520-0211
DESIGN: DML | DRAWN: CDT | CHECK: TLD

ABBREVIATIONS AND GENERAL NOTES

G-102

NOTE:
1. CONTRACTOR TO COORDINATED WITH OWNER FOR REQUIRED STAGING AREAS PER BUILDING.

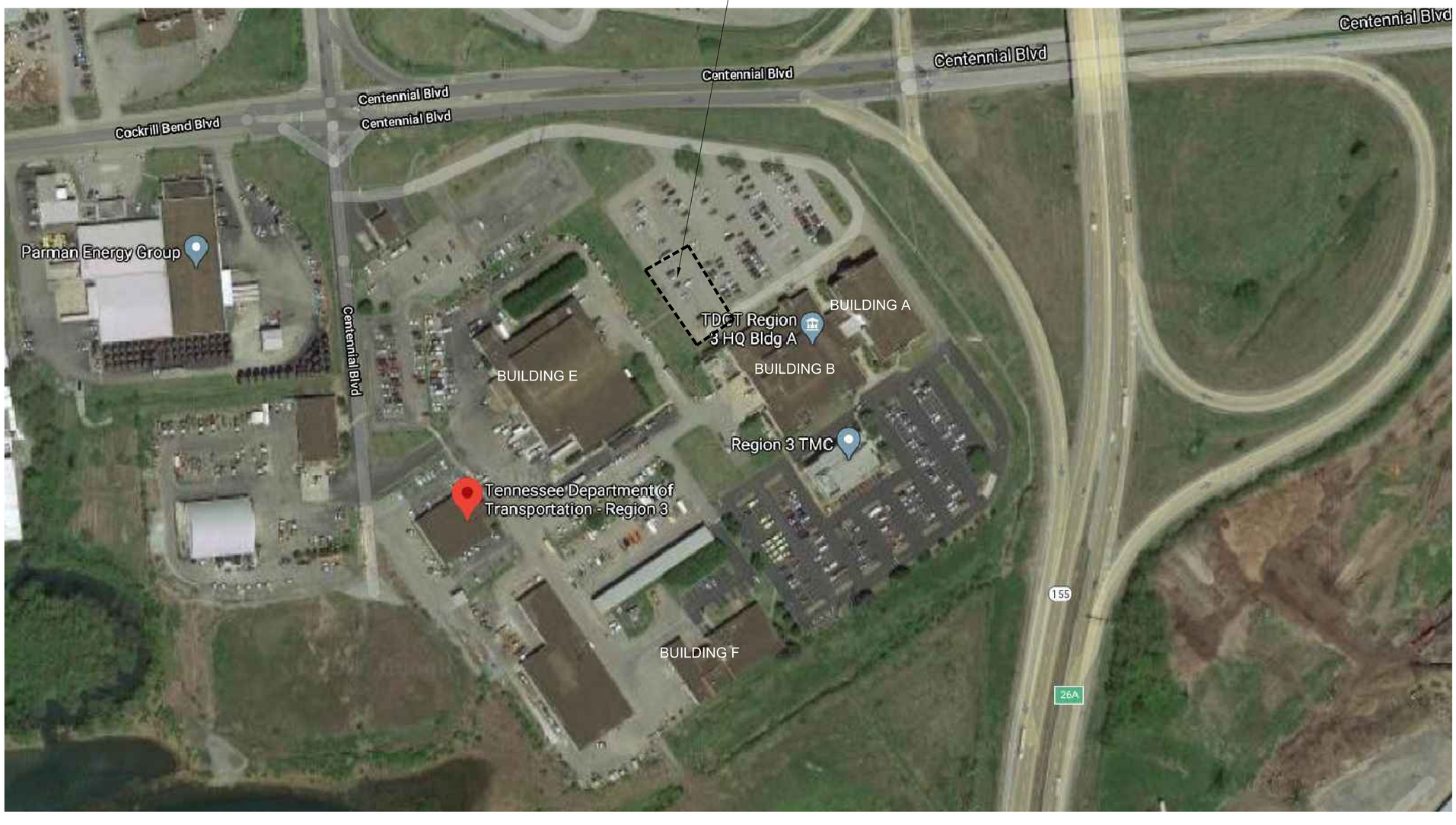

1 G-103 SITE PLAN
SCALE: N.T.S.

Hurst-Rosche, Inc.
PROFESSIONAL DESIGN NUMBER: 000372

561 MURFREESBORO PIKE
NASHVILLE, TN
PH: 615.454.6615

www.hurst-rosche.com

EAST ST. LOUIS, IL
MARION, IL
ARNOLD, MO
NEOSHO, MO
NASHVILLE, TN

DEBORAH M. LUNDBERG
REGISTERED ARCHITECT
AGRICULTURE
No. 103444
STATE OF TENNESSEE

SIGNATURE
DATE 04-13-2021
LICENSE EXPIRES 05-31-2022

REGION 3 HEADQUARTERS BUILDING REROOF
REGION 3 - MIDDLE TENNESSEE
NASHVILLE, DAVIDSON COUNTY, TENNESSEE
SBC No. 243/020-03-2020

MARK	DATE	DESCRIPTION

DATE: 04-13-2021
PROJECT NO: 520-0211

DESIGN:	DRAWN:	CHECK:
DML	CDT	DML

SITE PLAN

G-103

ROOF PLAN KEY NOTES: (X)

1. REMOVE AND SET ASIDE (PER GENERAL ROOF NOTE #1) EXISTING BALLAST. REMOVE AND DISPOSE OF EDPM ROOF SYSTEM INCLUDING ALL RIGID INSULATION SUBSTRATE AND ALL FLASHINGS AND ACCESSORIES TO THE EXISTING STRUCTURAL DECK. INSTALL NEW FULLY ADHERED, TPO MEMBRANE ROOF SYSTEM IN FULL COVERAGE OF COLD ADHESIVE OVER RIGID INSUL. INSTALLED IN TWO LAYERS TO ACHIEVE R-30. FIRST LAYER OF RIGID INSUL. SHALL BE MECHANICALLY ATTACHED AND SECOND LAYER SHALL BE ADHERED TO OFFSETTING JOINS AS RECOMMENDED AND APPROVED BY THE ROOF SYSTEM MANUFACTURER. INSTALL NEW 1/2" THICK GYPSUM-FIBER COVER BOARD OVER RIGID INSULATION (ADHERED W/ LOW-RISE FOAM ADHESIVE). PROVIDE ALL FLASHINGS, FASTENERS, ADHESIVES, & ACCESSORIES AS NECESSARY FOR INSTALLATION IN ACCORDANCE WITH THE MANUFACTURER'S PUBLISHED INSTALLATION INSTRUCTIONS (RE: ROOF ILLUSTRATION 10/A-502 AND SPEC SECTION 07 54 23). INSPECT THE CONDITION OF THE EXIST. CONCRETE DECK. REMOVE ANY DETERIORATED CONCRETE AND REPLACE WITH NEW CONCRETE. RAKE AND RESEAL ANY DETERIORATED JOINTS IN THE CONCRETE. PREPARE THE EXIST. DECK AS NECESSARY PRIOR TO INSTALLING NEW MATERIAL, FOLLOW THE ROOF SYSTEM MANUFACTURER'S PRINTED INSTRUCTIONS FOR THE PREPARATION OF AN APPROVED SUBSTRATE.

2. INSTALL NEW ROOF ACCESS DOOR IN SIDEWALL. EXTEND NEW MEMBRANE WALL FLASHING UNDER DOOR THRESHOLD. SEE A-601 FOR NEW DOOR INFORMATION.

3. INSTALL NEW WALK PADS TO AND AT BASE OF EQUIPMENT ON WOOD, UNDER ROOF ACCESS DOOR, AND TO AND AT PERIMETER OF ALL RTUS.

4. EXISTING CURBS FOR FANS AND POWER CONNECTIONS INCREASE CURBS AS NEEDED WITH NEW INSULATION HEIGHT. FLASH ROOF CURBS PER TYPICAL DETAILS.

5. EXISTING PVC VENT PIPING AND SUPPORTS. FLASH ROOF PENETRATION PER TYPICAL DETAILS.

6. REMOVE AND DISPOSE OF ALL ROOF DRAIN STRAINERS AND CLAMPING RINGS AT ALL ROOF DRAINS. ROOF DRAINS TO REMAIN AND BE RETROFITTED WITH NEW INSERTS AND STRAINERS.

ROOF PLAN KEY NOTES FOR ALTENATES: (X)

1. ALTERNATE BID 1 - PVC/KEE MEMBRANE IN LIEU OF TPO

SYMBOLS LEGEND

—GAS—GAS—	EXISTING GAS LINE
RTU	EXISTING ROOFTOP MECHANICAL EQUIPMENT. SEE TYPICAL PENETRATION DETAILS.
SC	EXISTING SCUPPER
V	EXISTING PIPE VENT PENETRATION. SEE TYPICAL PENETRATION DETAILS.
P	EXISTING ROUND PENETRATION. SEE TYPICAL PENETRATION DETAILS.
R.D.	EXISTING ROOF DRAIN LOCATIONS
E	EXISTING EXHAUST FAN. SEE TYPICAL CURB FLASHING DETAILS.

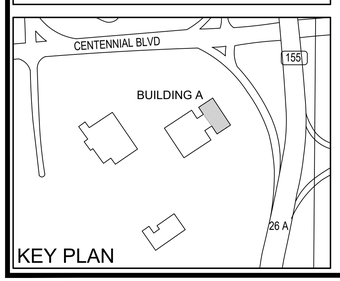

KEY PLAN

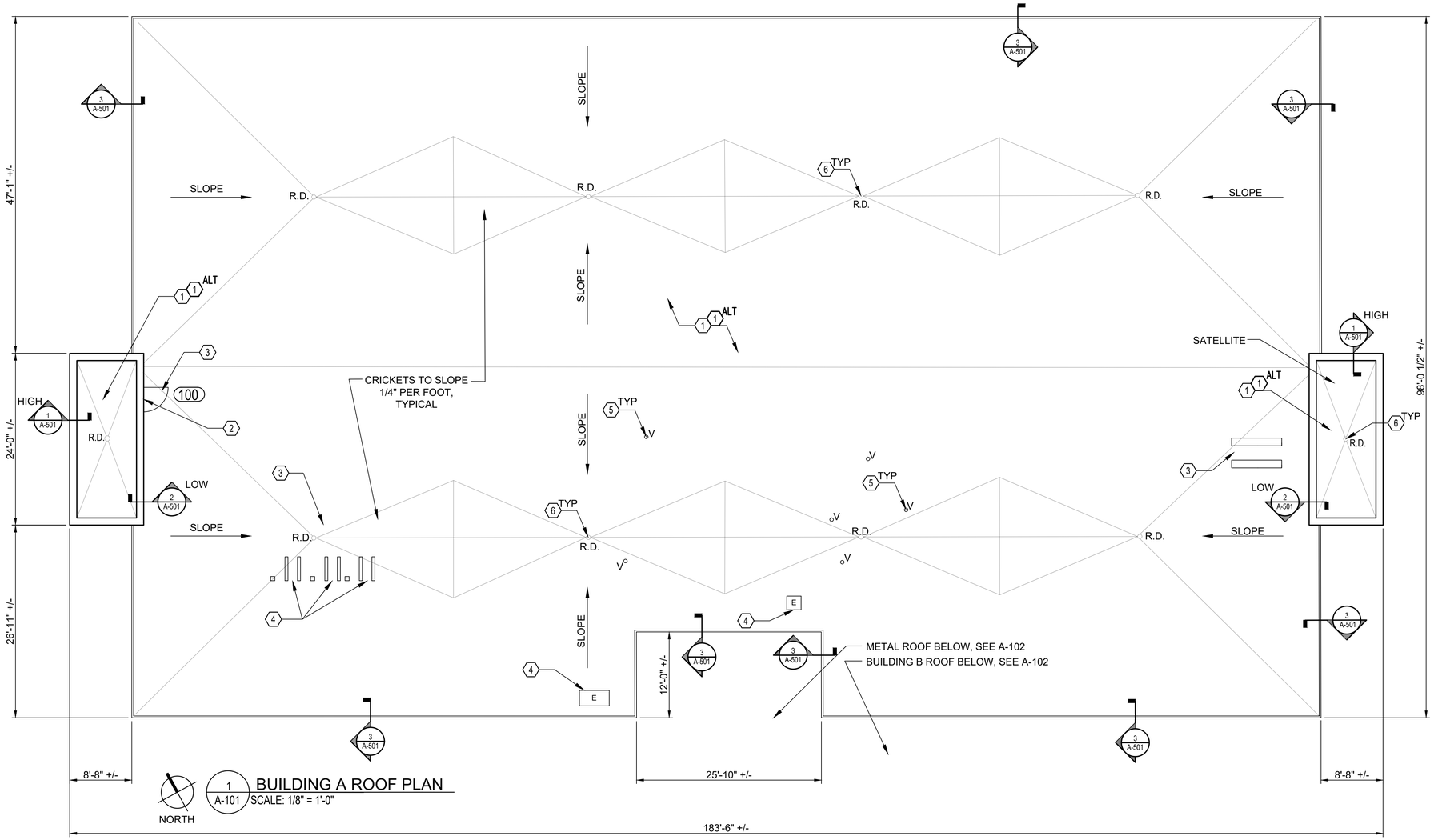

1 A-101 BUILDING A ROOF PLAN
SCALE: 1/8" = 1'-0"

GENERAL ROOF NOTES:

1. SALVAGE ALL EXISTING ROCK BALLAST FOR THE OWNERS USE AND STOCKPILE AT A STATE OWNED SITE APPROXIMATELY TWO MILES AWAY. VERIFY WITH THE OWNER FOR EXACT LOCATION. REMOVE ALL EXISTING ROOF MEMBRANE AND INSULATION ON BUILDING A MAIN ROOF AND STAIRWELLS, BUILDING B MAIN ROOF, BUILDING E MAIN ROOF, UPPER ROOF AND THREE SMALLER ROOFS, AND BUILDING F'S THREE ROOF SECTIONS.

2. REMOVE & REPLACE ALL EXISTING SHEET METAL FLASHINGS & ACCESSORIES INCLUDING ALL ROOF EDGE FLASHING, FASCIAS, COUNTER FLASHINGS, & ACCESSORIES AT ROOF SECTIONS TO RECEIVE ROOF REPLACEMENT UNLESS OTHERWISE INDICATED. REPLACE W/ NEW PREFINISHED SHEET METAL FLASHING & ACCESSORIES AS INDICATED. MATCH SIZE & PROFILE OF EXG. UNLESS OTHERWISE INDICATED OR REQUIRED BY CONDITIONS ENCOUNTERED.

3. THE CONDITION OF THE EXG. ROOF ASSEMBLY INCLUDING ROOF COVERING, SUBSTRATE & DECKING IS UNKNOWN & MAY BE DAMAGED OR DETERIORATED. THE CONTRACTOR SHALL BE SOLELY RESPONSIBLE FOR THE SAFETY OF THE BUILDING, OCCUPANTS, & WORKERS THROUGHOUT CONSTRUCTION. THE CONTRACTOR SHALL TAKE ALL NECESSARY SAFETY PRECAUTIONS & COMPLY WITH ALL APPLICABLE REGULATIONS INCLUDING OSHA SAFETY REGULATIONS FOR ROOFING OPERATIONS.

4. ALL EXG. FINISHES DISTURBED DURING CONSTRUCTION SHALL BE RESTORED TO A CONDITION AT LEAST EQUAL IN MATERIAL & APPEARANCE TO THAT WHICH EXISTED BEFORE CONSTRUCTION.

5. ALL REFUSE & DEBRIS SHALL BE REMOVED FROM THE SITE & LEGALLY DISPOSED OF BY THE CONTRACTOR UNLESS OTHERWISE INDICATED.

6. CONTRACTOR SHALL FIELD VERIFY ALL EXG. DIMENSIONS & CONDITIONS & MAKE MINOR ADJUSTMENTS AS NECESSARY. DIMENSIONS ON DRAWINGS ARE FOR GENERAL INFORMATION ONLY. PRIOR TO SUBMITTING BID PROPOSAL, THE CONTRACTOR SHALL THOROUGHLY SURVEY THE FACILITY TO VERIFY EXG. CONDITIONS & DIMENSIONS, AND DETERMINE ALL MATERIALS, LABOR, & INCIDENTALS NEEDED FOR COMPLETION OF THE WORK & TO PROVIDE THE SPECIFIED ROOF SYSTEM WARRANTY IN ACCORDANCE W/ THE CONTRACT DOCUMENTS.

7. DIRECTIONAL ARROWS AS INDICATED ON THE ROOF PLAN ARE INTENDED AS A GENERIC REPRESENTATION OF THE GENERAL DIRECTION OF ROOF SURFACE SLOPE. EXISTING SYSTEM IS NOT AS THICK AS NEW PROPOSED SYSTEM. MODIFY EXG. ROOF EDGE NAILERS & PROVIDE NEW TREATED WOOD EDGE NAILERS AS NECESSARY TO MATCH THICKNESS OF NEW SUBSTRATE INSULATION.

8. THE CONTRACTOR SHALL REMOVE & REINSTALL ALL EXISTING ROOF OR WALL MOUNTED EQUIPMENT & ACCESSORIES TO REMAIN AS NECESSARY TO COMPLETE THE WORK. FIELD VERIFY SIZE, QUANTITY, & LOCATION OF ALL ROOF PENETRATIONS, EQUIPMENT & ACCESSORIES. MODIFY/EXTEND EXG. CONTROL WIRING, CONDUIT, DUCTWORK OR PIPING AS NECESSARY TO ACCOMMODATE NEW WORK. PROVIDE NEW WOOD NAILERS AS NECESSARY TO RAISE EXISTING EQUIPMENT SUPPORT CURBS AND RAILS A MINIMUM OF 8 INCHES ABOVE THE FINISHED ROOF SURFACE. NOTIFY THE OWNER & COORDINATE ANY INTERRUPTION IN EQUIPMENT SERVICE PRIOR TO REMOVAL.

9. PROTECT EXG. UTILITIES DURING CONSTRUCTION. FLASH ALL UTILITY, CONDUIT, & PIPING PENETRATIONS IN ACCORDANCE W/ THE ROOF MANUFACTURER'S PUBLISHED INSTRUCTIONS. FIELD VERIFY SIZE, QUANTITY & LOCATION.

10. ALL PIPE VENTS SHALL EXTEND A MIN. OF 12-INCHES ABOVE THE FINISHED ROOF SURFACE. EXTEND AS NECESSARY & PROVIDE FLASHING PER TYPICAL DETAIL.

11. PROVIDE 1/2":FT TAPERED RIGID INSULATION AT ALL NEW CRICKET AND SADDLE LOCATIONS. TAPERED INSULATION CRICKETS & SADDLES ARE REQUIRED AT LOCATIONS INDICATED ON THE ROOF PLAN & AS REQUIRED BY FIELD CONDITIONS TO PROVIDE POSITIVE ROOF DRAINAGE.

12. MAINTAINING DRAINAGE - IT SHALL BE THE RESPONSIBILITY OF THE CONTRACTOR TO MAINTAIN DRAINAGE FLOWS AT ALL TIMES DURING THE THE WORK. DAMAGE RESULTING FROM IMPROPER MAINTENANCE OF DRAINAGE SHALL BE IMMEDIATELY REPAIRED BY THE CONTRACTOR AT NO ADDITIONAL COST TO THE OWNER.

13. AFTER ALL WORK IS COMPLETED, THE CONTRACTOR SHALL CLEAN WORK AREAS SO THAT THEY ARE FREE OF ANY CONSTRUCTION MATERIALS, TOOLS, DIRT, & DEBRIS. FINE GRADE, SEED, FERTILIZE, & STRAW ALL DISTURBED LAWN.

14. CONTRACTOR SHALL NOTIFY OWNER AND A/E PRIOR TO USE OF ANY SCAFFOLDING, LIFTS, SWING STAGES, ETC. USE OF SUCH MATERIALS AND EQUIPMENT SHALL MEET ALL FEDERAL, STATE, AND LOCAL SAFETY REGULATIONS AND ORDINANCES.

15. CONTRACTOR SHALL COORDINATE ALL WORK WITH OWNER, A/E, & OTHER TRADES THROUGHOUT THE PROJECT.

16. CONTRACTOR SHALL COORDINATE WITH OWNER FOR ALL OWNER RELATED SCHEDULES, PROCEDURES, CLEARANCES, AND REQUIREMENTS TO ACCESS THE OWNERS FACILITIES. SUCH PROCEDURES ARE INCIDENTAL TO THE CONTRACT AND SHALL NOT RESULT IN ADDITIONAL COST TO THE OWNER.

17. PROVIDE AND INSTALL MEMBRANE WALK PADS BENEATH EXISTING CONDENSING UNIT WOOD SLEEPERS AND PADS.

18. PROVIDE NEW MEMBRANE WALKPADS AT THE PERIMETER OF ALL MECHANICAL UNITS, ROOF HATCHES, & BELOW ALL ROOFTOP DOWNSPOUTS, EQUIPMENT SUPPORTS & PIPE SUPPORTS.

19. PERFORM WORK IN ACCORDANCE W/ NRCA ROOFING & WATERPROOFING MANUAL, LATEST EDITION.

Hurst-Rosche, Inc.
PROFESSIONAL DESIGN NUMBER: 000372

561 MURFREESBORO PIKE
NASHVILLE, TN
PH: 615.454.6615
www.hurst-rosche.com

EAST ST. LOUIS, IL
MARION, IL
ARNOLD, MO
NEOSHO, MO
NASHVILLE, TN

DEBORAH M. LUNDBERG
REGISTERED ARCHITECT
AGRICULTURE COMMERCE
NO. 102344
STATE OF TENNESSEE

SIGNATURE
04-13-2021
DATE
05-31-2022
LICENSE EXPIRES

REGION 3 HEADQUARTERS BUILDING REROOF
REGION 3 - MIDDLE TENNESSEE
NASHVILLE, DAVIDSON COUNTY, TENNESSEE
SBC No. 243/020-03-2020

MARK	DATE	DESCRIPTION

DATE: 04-13-2021
PROJECT NO: 520-0211

DESIGN:	DRAWN:	CHECK:
DML	CDT	DML

BUILDING A
ROOF PLAN

A-101

ROOF PLAN KEY NOTES: (X)

1. REMOVE AND SET ASIDE (PER GENERAL ROOF NOTE #1) EXISTING BALLAST. REMOVE AND DISPOSE OF EDPM ROOF SYSTEM INCLUDING ALL RIGID INSULATION SUBSTRATE AND ALL FLASHINGS AND ACCESSORIES TO THE EXISTING STRUCTURAL DECK. INSTALL NEW FULLY ADHERED, TPO MEMBRANE ROOF SYSTEM IN FULL COVERAGE OF COLD ADHESIVE OVER RIGID INSUL. INSTALLED IN TWO LAYERS TO ACHIEVE R-30. FIRST LAYER OF RIGID INSUL. SHALL BE MECHANICALLY ATTACHED AND SECOND LAYER SHALL BE ADHERED TO OFFSETTING JOINS AS RECOMMENDED AND APPROVED BY THE ROOF SYSTEM MANUFACTURER. INSTALL NEW 1/2" THICK GYPSUM-FIBER COVER BOARD OVER RIGID INSULATION (ADHERED W/ LOW-RISE FOAM ADHESIVE). PROVIDE ALL FLASHINGS, FASTENERS, ADHESIVES, & ACCESSORIES AS NECESSARY FOR INSTALLATION IN ACCORDANCE WITH THE MANUFACTURER'S PUBLISHED INSTALLATION INSTRUCTIONS (RE: ROOF ILLUSTRATION 9/A-502 AND SPEC SECTION 07 54 23). PREPARE THE EXIST. DECK AS NECESSARY PRIOR TO INSTALLING NEW MATERIAL, FOLLOW THE ROOF SYSTEM MANUFACTURER'S PRINTED INSTRUCTIONS FOR THE PREPARATION OF AN APPROVED SUBSTRATE.
2. EXISTING ROOF ACCESS DOOR IN SIDEWALL. EXTEND NEW MEMBRANE WALL FLASHING UNDER DOOR THRESHOLD. REMOVE AND REINSTALL EXISTING THRESHOLD AS NECESSARY AND SET IN FULL BED OF MASTIC.
3. INSTALL NEW WALK PADS UNDER ACCESS DOOR, TO AND AT PERIMETER OF ALL RTUS.
4. EXISTING CURBS FOR FANS. INCREASE CURBS AS NEEDED WITH NEW INSULATION HEIGHT. FLASH ROOF CURBS PER TYPICAL DETAILS.
5. EXISTING PVC VENT PIPING AND SUPPORTS. FLASH ROOF PENETRATION PER TYP. DETAILS.
6. REMOVE AND DISPOSE OF ALL ROOF DRAIN STRAINERS AND CLAMPING RINGS AT ALL ROOF DRAINS. ROOF DRAINS TO REMAIN AND BE RETROFITTED WITH NEW INSERTS AND STRAINERS
7. UNUSED EQUIPMENT/PIPE/CURB, REMOVE CURBS AND REPAIR DECK BELOW AS REQUIRED FOR NEW ROOF TO BE INSTALLED
8. METAL ROOF - CLEANED, SEAL AROUND FASTENER HOLES/OTHER PENETRATIONS AND APPLY NEW COATING TO THE METAL ROOFING INCLUDING ALL RELATED SHEET METAL FLASHING AND ACCESSORIES. SEE SPEC SECTION 07 56 00. SEE DETAILS 10/A-501 & 11/A-501 FOR FLASHING DETAILS.

ROOF PLAN KEY NOTES FOR ALTENATES: (X)

1. ALTERNATE BID 1 - PVC/KEE MEMBRANE IN LIEU OF TPO

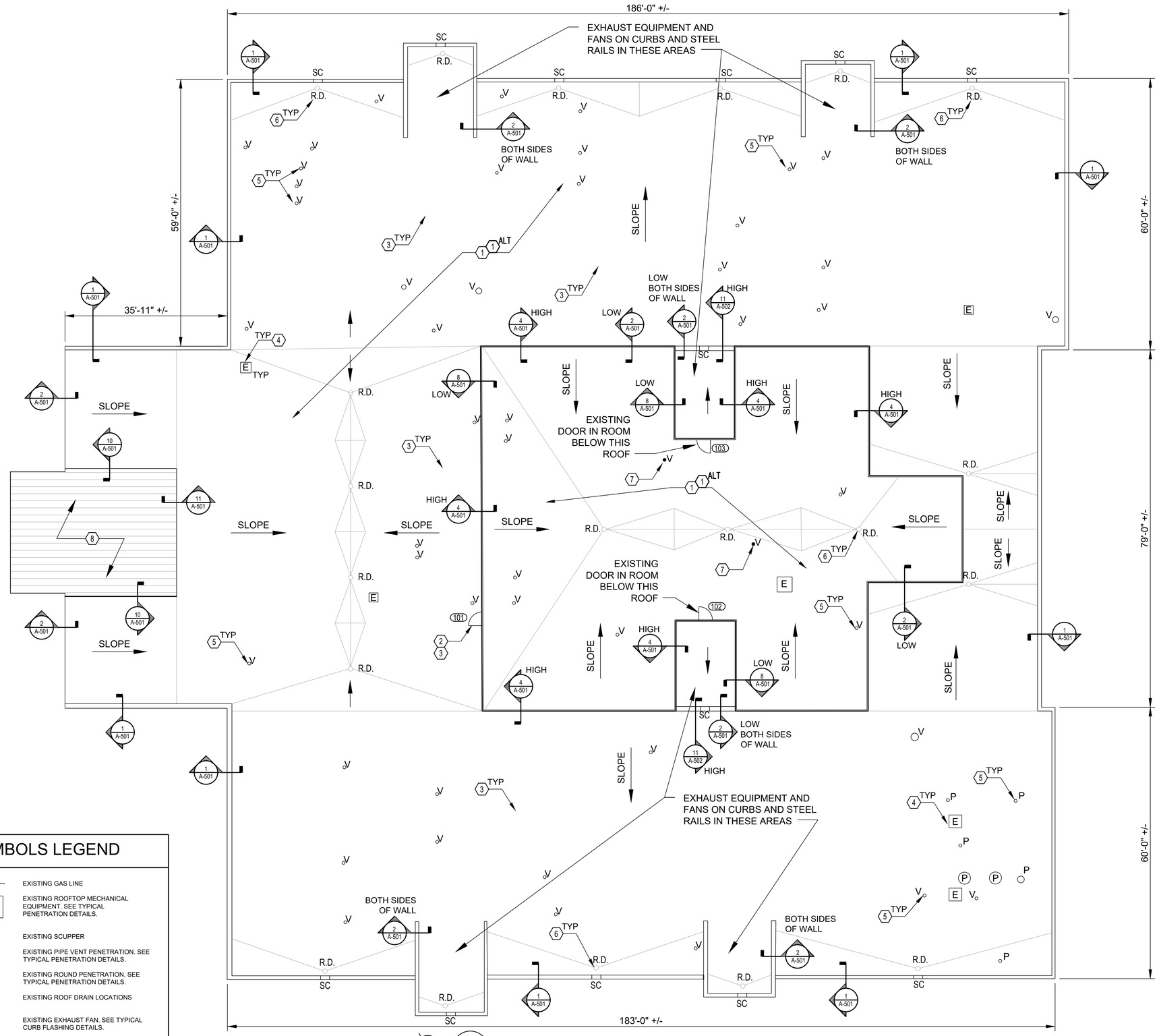

SYMBOLS LEGEND

—GAS—GAS—	EXISTING GAS LINE
RTU	EXISTING ROOFTOP MECHANICAL EQUIPMENT. SEE TYPICAL PENETRATION DETAILS.
SC	EXISTING SCUPPER
V	EXISTING PIPE VENT PENETRATION. SEE TYPICAL PENETRATION DETAILS.
P	EXISTING ROUND PENETRATION. SEE TYPICAL PENETRATION DETAILS.
R.D.	EXISTING ROOF DRAIN LOCATIONS
E	EXISTING EXHAUST FAN. SEE TYPICAL CURB FLASHING DETAILS.

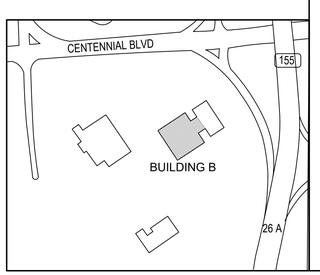

KEY PLAN

NORTH

1 A-102 BUILDING B ROOF PLAN
SCALE: 3/32" = 1'-0"

HR
Hurst-Rosche, Inc.
PROFESSIONAL DESIGN NUMBER: 000372
561 MURFREESBORO PIKE
NASHVILLE, TN
PH: 615.454.6615
www.hurst-rosche.com
EAST ST. LOUIS, IL
MARION, IL
ARNOLD, MO
NEOSHO, MO
NASHVILLE, TN

DEBORAH M. LUNDBERG REGISTERED ARCHITECT No. 102344 STATE OF TENNESSEE

SIGNATURE 04-13-2021
DATE 05-31-2022
LICENSE EXPIRES

REGION 3 HEADQUARTERS BUILDING REROOF
REGION 3 - MIDDLE TENNESSEE
NASHVILLE, DAVIDSON COUNTY, TENNESSEE
SBC No. 243/020-03-2020

MARK	DATE	DESCRIPTION

DATE: 04-13-2021
PROJECT NO: 520-0211

DESIGN:	DRAWN:	CHECK:
DML	CDT	DML

BUILDING B
ROOF PLAN

A-102

SEE SHEET A-103B FOR CONTINUATION OF ROOF PLAN E

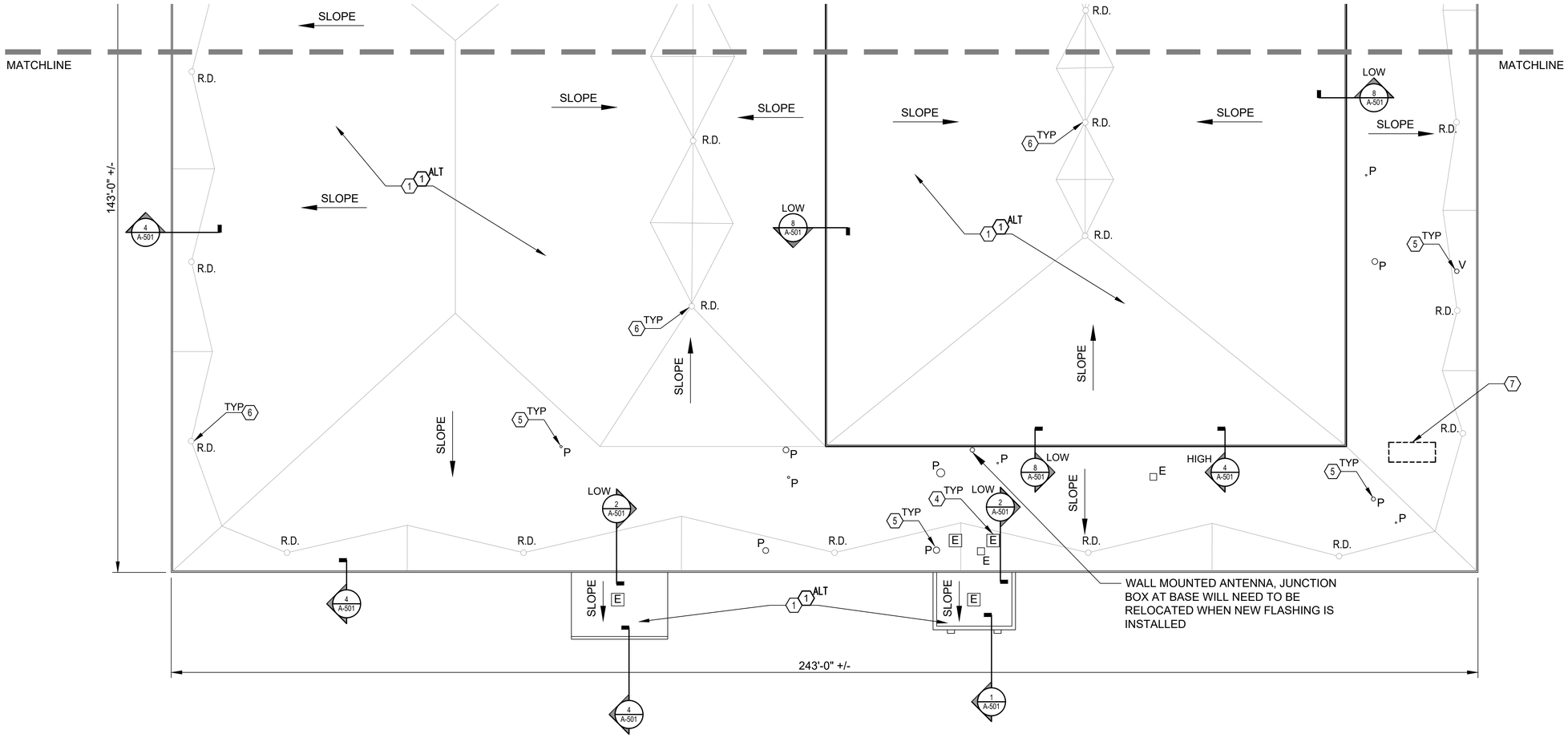

NORTH

1 / A-103A PARTIAL BUILDING E ROOF PLAN
SCALE: 3/32" = 1'-0"

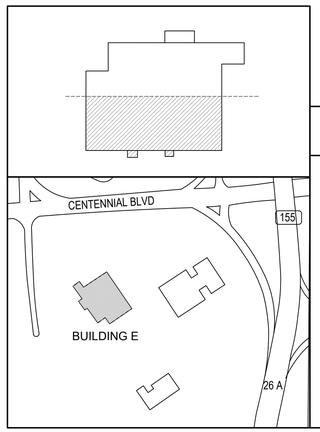

KEY PLAN

SYMBOLS LEGEND

GAS	EXISTING GAS LINE
RTU	EXISTING ROOFTOP MECHANICAL EQUIPMENT. SEE TYPICAL PENETRATION DETAILS.
SC	EXISTING SCUPPER
V	EXISTING PIPE VENT PENETRATION. SEE TYPICAL PENETRATION DETAILS.
P	EXISTING ROUND PENETRATION. SEE TYPICAL PENETRATION DETAILS.
R.D.	EXISTING ROOF DRAIN LOCATIONS
E	EXISTING EXHAUST FAN. SEE TYPICAL CURB FLASHING DETAILS.

ROOF PLAN KEY NOTES: (X)

1. REMOVE AND SET ASIDE (PER GENERAL ROOF NOTE #1) EXISTING BALLAST. REMOVE AND DISPOSE OF EDPM ROOF SYSTEM INCLUDING ALL RIGID INSULATION SUBSTRATE AND ALL FLASHINGS AND ACCESSORIES TO THE EXISTING STRUCTURAL DECK. INSTALL NEW FULLY ADHERED, TPO MEMBRANE ROOF SYSTEM IN FULL COVERAGE OF COLD ADHESIVE OVER RIGID INSUL. INSTALLED IN TWO LAYERS TO ACHIEVE R-30. FIRST LAYER OF RIGID INSUL. SHALL BE MECHANICALLY ATTACHED AND SECOND LAYER SHALL BE ADHERED TO OFFSETTING JOINS AS RECOMMENDED AND APPROVED BY THE ROOF SYSTEM MANUFACTURER. INSTALL NEW 1/2" THICK GYPSUM-FIBER COVER BOARD OVER RIGID INSULATION (ADHERED W/ LOW-RISE FOAM ADHESIVE). PROVIDE ALL FLASHINGS, FASTENERS, ADHESIVES, & ACCESSORIES AS NECESSARY FOR INSTALLATION IN ACCORDANCE WITH THE MANUFACTURER'S PUBLISHED INSTALLATION INSTRUCTIONS (RE: ROOF ILLUSTRATION 9/A-502 AND SPEC SECTION 07 54 23). PREPARE THE EXIST. DECK AS NECESSARY PRIOR TO INSTALLING NEW MATERIAL, FOLLOW THE ROOF SYSTEM MANUFACTURER'S PRINTED INSTRUCTIONS FOR THE PREPARATION OF AN APPROVED SUBSTRATE.
2. INSTALL NEW CURB MOUNTED RAILS AT EXISTING ROOF HATCH.
3. INSTALL NEW WALK PADS AT BASE OF LADDER, AT ROOF HATCH, TO AND AT PERIMETER OF ALL RTUS.
4. EXISTING CURBS FOR FANS AND POWER CONNECTIONS. FLASH ROOF CURBS PER TYPICAL DETAILS.
5. EXISTING PVC VENT PIPING AND SUPPORTS. FLASH ROOF PENETRATION PER TYP. DETAILS.
6. REMOVE AND DISPOSE OF ALL ROOF DRAIN STRAINERS AND CLAMPING RINGS AT ALL ROOF DRAINS. ROOF DRAINS TO REMAIN AND BE RETROFITTED WITH NEW INSERTS AND STRAINERS.
7. UNUSED EQUIPMENT/PIPE/CURB, REMOVE CURBS AND REPAIR DECK BELOW AS REQUIRED FOR NEW ROOF TO BE INSTALLED.

ROOF PLAN KEY NOTES FOR ALTENATES: (X)

1. ALTERNATE BID 1 - PVC/KEE MEMBRANE IN LIEU OF TPO

Hurst-Rosche, Inc.
PROFESSIONAL DESIGN NUMBER: 000372
561 MURFREESBORO PIKE
NASHVILLE, TN
PH: 615.454.6615
www.hurst-rosche.com
EAST ST. LOUIS, IL
MARION, IL
ARNOLD, MO
NEOSHO, MO
NASHVILLE, TN

DEBORAH M. LUNDBERG
REGISTERED ARCHITECT
No. 103440
STATE OF TENNESSEE

SIGNATURE 04-13-2021
DATE 05-31-2022
LICENSE EXPIRES

REGION 3 HEADQUARTERS BUILDING REROOF
REGION 3 - MIDDLE TENNESSEE
NASHVILLE, DAVIDSON COUNTY, TENNESSEE
SBC No. 243/020-03-2020

MARK	DATE	DESCRIPTION

DATE: 04-13-2021
PROJECT NO: 520-0211

DESIGN:	DRAWN:	CHECK:
DML	CDT	DML

PARTIAL BUILDING E ROOF PLAN

A-103A

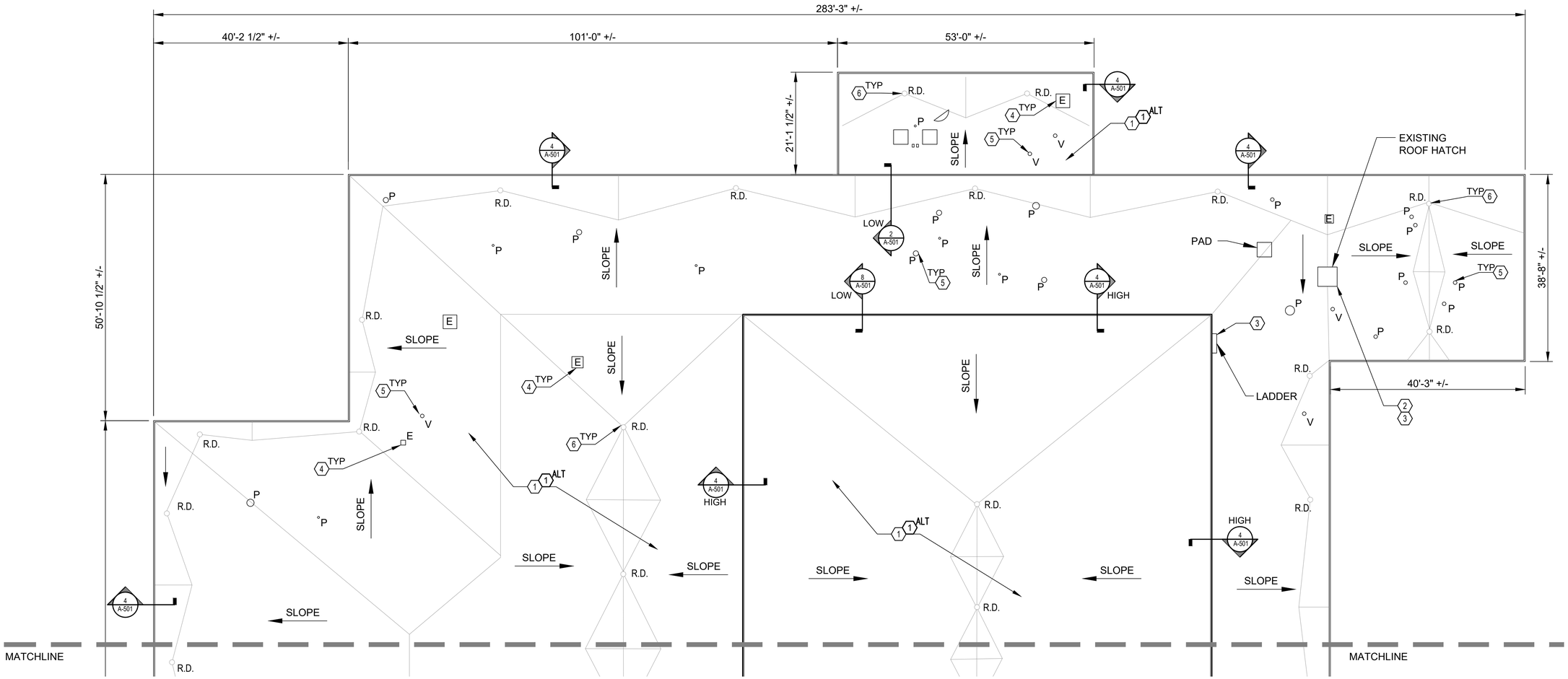

SEE SHEET A-103A FOR CONTINUATION OF ROOF PLAN E.

NORTH

1 A-103B PARTIAL BUILDING E ROOF PLAN
SCALE: 3/32" = 1'-0"

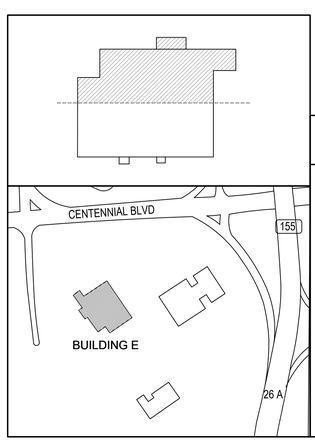

KEY PLAN

SYMBOLS LEGEND

	EXISTING GAS LINE
RTU	EXISTING ROOFTOP MECHANICAL EQUIPMENT. SEE TYPICAL PENETRATION DETAILS.
SC	EXISTING SCUPPER
V	EXISTING PIPE VENT PENETRATION. SEE TYPICAL PENETRATION DETAILS.
P	EXISTING ROUND PENETRATION. SEE TYPICAL PENETRATION DETAILS.
R.D.	EXISTING ROOF DRAIN LOCATIONS
E	EXISTING EXHAUST FAN. SEE TYPICAL CURB FLASHING DETAILS.

NOTE:

1. SEE SHEET A-103A FOR "ROOF PLAN KEY NOTES" AND "ROOF PLAN KEY NOTES FOR ALTERNATES".

HR
Hurst-Rosche, Inc.
PROFESSIONAL DESIGN NUMBER: 000372
561 MURFREESBORO PIKE
NASHVILLE, TN
PH: 615.454.6615
www.hurst-rosche.com
EAST ST. LOUIS, IL
MARION, IL
ARNOLD, MO
NEOSHO, MO
NASHVILLE, TN

DEBORAH M. LUNDBERG
REGISTERED ARCHITECT
AGRICULTURE
COMMERCE
No. 103444
STATE OF TENNESSEE

SIGNATURE
DATE 04-13-2021
LICENSE EXPIRES 05-31-2022

REGION 3 HEADQUARTERS BUILDING REROOF
REGION 3 - MIDDLE TENNESSEE
NASHVILLE, DAVIDSON COUNTY, TENNESSEE
SBC No. 243/020-03-2020

MARK	DATE	DESCRIPTION

DATE: 04-13-2021
PROJECT NO: 520-0211

DESIGN:	DRAWN:	CHECK:
DML	CDT	DML

PARTIAL BUILDING E ROOF PLAN

A-103B

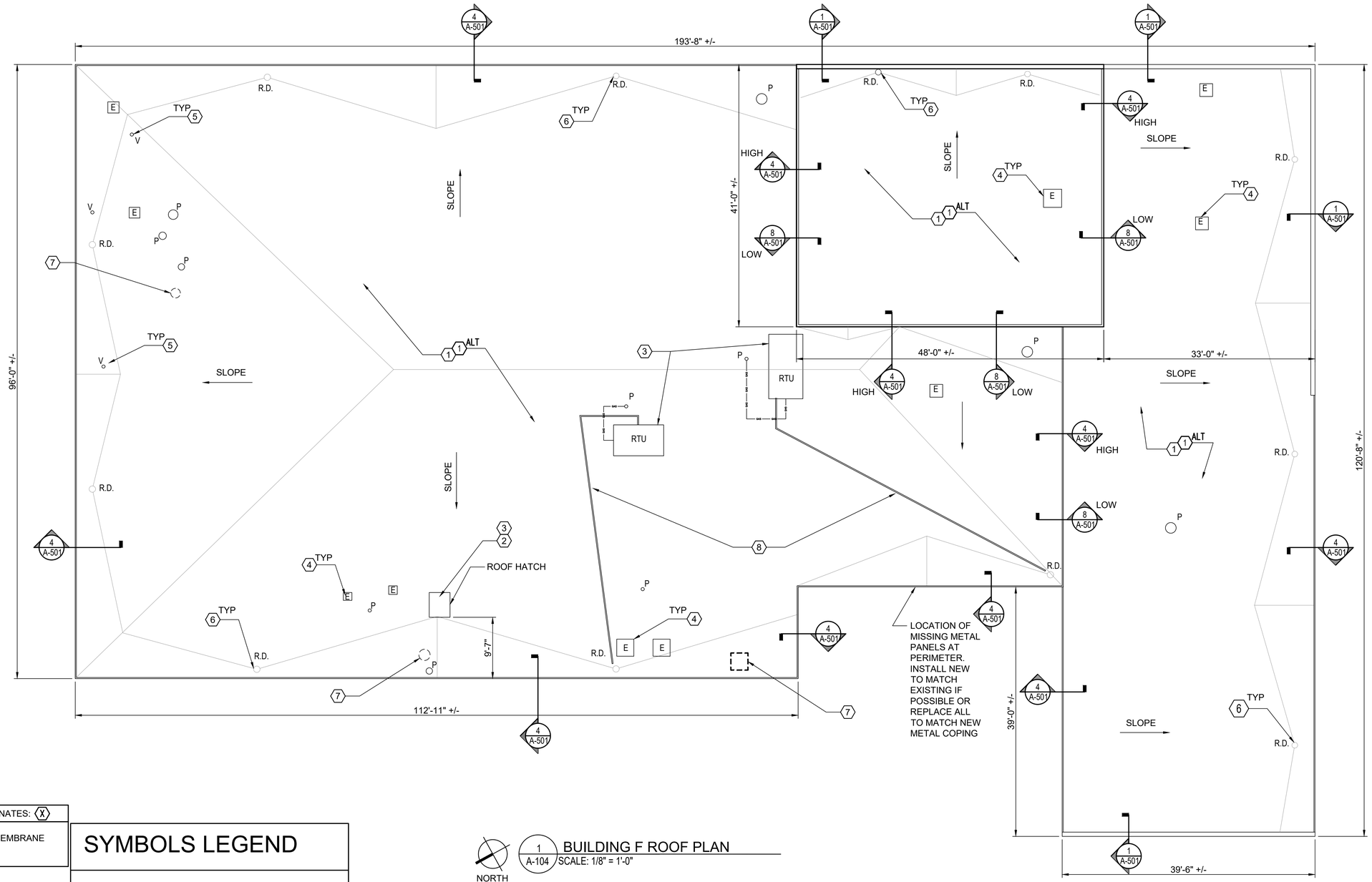

NORTH

1 / A-104 BUILDING F ROOF PLAN
SCALE: 1/8" = 1'-0"

ROOF PLAN KEY NOTES FOR ALTENATES: (X)

1. ALTERNATE BID 1 - PVC/KEE MEMBRANE IN LIEU OF TPO

SYMBOLS LEGEND

—GAS—GAS—	EXISTING GAS LINE
RTU	EXISTING ROOFTOP MECHANICAL EQUIPMENT. SEE TYPICAL PENETRATION DETAILS.
SC	EXISTING SCUPPER
V	EXISTING PIPE VENT PENETRATION. SEE TYPICAL PENETRATION DETAILS.
P	EXISTING ROUND PENETRATION. SEE TYPICAL PENETRATION DETAILS.
R.D.	EXISTING ROOF DRAIN LOCATIONS
E	EXISTING EXHAUST FAN. SEE TYPICAL CURB FLASHING DETAILS.

ROOF PLAN KEY NOTES: (X)

1. REMOVE AND SET ASIDE (PER GENERAL ROOF NOTE #1) EXISTING BALLAST. REMOVE AND DISPOSE OF EDPM ROOF SYSTEM INCLUDING ALL RIGID INSULATION SUBSTRATE AND ALL FLASHINGS AND ACCESSORIES TO THE EXISTING STRUCTURAL DECK. INSTALL NEW FULLY ADHERED, TPO MEMBRANE ROOF SYSTEM IN FULL COVERAGE OF COLD ADHESIVE OVER RIGID INSUL. INSTALLED IN TWO LAYERS TO ACHIEVE R-30. FIRST LAYER OF RIGID INSUL. SHALL BE MECHANICALLY ATTACHED AND SECOND LAYER SHALL BE ADHERED TO OFFSETTING JOINS MECHANICALLY ATTACHED AS RECOMMENDED AND APPROVED BY THE ROOF SYSTEM MANUFACTURER. INSTALL NEW 1/2" THICK GYPSUM-FIBER COVER BOARD OVER RIGID INSULATION (ADHERED W/ LOW-RISE FOAM ADHESIVE). PROVIDE ALL FLASHINGS, FASTENERS, ADHESIVES, & ACCESSORIES AS NECESSARY FOR INSTALLATION IN ACCORDANCE WITH THE MANUFACTURER'S PUBLISHED INSTALLATION INSTRUCTIONS (RE: ROOF ILLUSTRATION 9/A-502 AND SPEC SECTION 07 54 23). PREPARE THE EXIST. DECK AS NECESSARY PRIOR TO INSTALLING NEW MATERIAL, FOLLOW THE ROOF SYSTEM MANUFACTURER'S PRINTED INSTRUCTIONS FOR THE PREPARATION OF AN APPROVED SUBSTRATE.
2. INSTALL NEW CURB MOUNTED RAILS AT EXISTING ROOF HATCH.
3. INSTALL NEW WALK PADS AT ROOF HATCH, TO AND AT PERIMETER OF ALL RTUS.
4. EXISTING CURBS FOR FANS. INCREASE CURBS AS NEEDED WITH NEW INSULATION HEIGHT. FLASH ROOF CURBS PER TYPICAL DETAILS.
5. EXISTING PVC VENT PIPING AND SUPPORTS. FLASH ROOF PENETRATION PER TYP. DETAILS.
6. REMOVE AND DISPOSE OF ALL ROOF DRAIN STRAINERS AND CLAMPING RINGS AT ALL ROOF DRAINS. ROOF DRAINS TO REMAIN AND BE RETROFITTED WITH NEW INSERTS AND STRAINERS.
7. UNUSED EQUIPMENT/PIPE/CURB, REMOVED CURBS, REPAIR DECK BELOW AS REQUIRED FOR NEW ROOF TO BE INSTALLED.
8. EXISTING CONDENSATE DRAIN PIPING AND SUPPORTS TO REMAIN. MODIFY AS NECESSARY TO ACCOMMODATE NEW ROOF THICKNESS AND EXTEND AS NECESSARY TO DISCHARGE AT ROOF DRAIN.

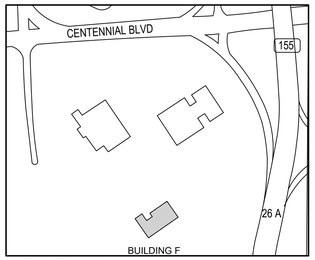

KEY PLAN

Hurst-Rosche, Inc.
PROFESSIONAL DESIGN NUMBER: 000372
561 MURFREESBORO PIKE
NASHVILLE, TN
PH: 615.454.6615
www.hurst-rosche.com
EAST ST. LOUIS, IL
MARION, IL
ARNOLD, MO
NEOSHO, MO
NASHVILLE, TN

DEBORAH M. LUNDBERG
REGISTERED ARCHITECT
No. 103440
STATE OF TENNESSEE

SIGNATURE
04-13-2021
DATE
05-31-2022
LICENSE EXPIRES

REGION 3 HEADQUARTERS BUILDING REROOF
REGION 3 - MIDDLE TENNESSEE
NASHVILLE, DAVIDSON COUNTY, TENNESSEE
SBC No. 243/020-03-2020

MARK	DATE	DESCRIPTION

DATE: 04-13-2021
PROJECT NO: 520-0211

DESIGN:	DRAWN:	CHECK:
DML	CDT	DML

BUILDING F
ROOF PLAN

A-104

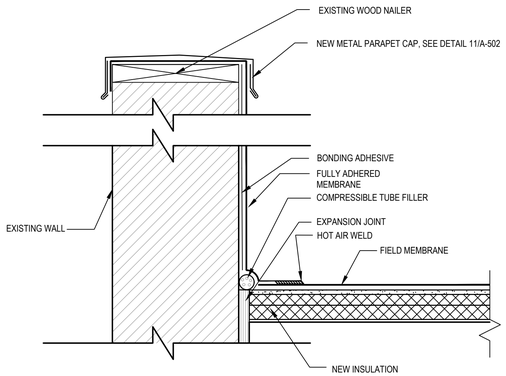

1 A-501 PARAPET DETAIL
SCALE: 1-1/2"=1'-0"

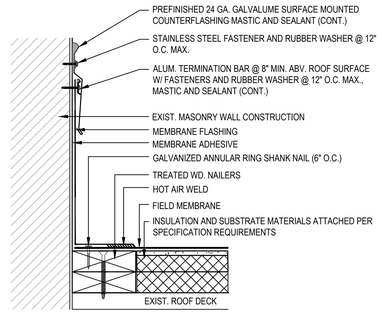

2 A-501 FLASHING AT WALL
SCALE: 1-1/2"=1'-0"

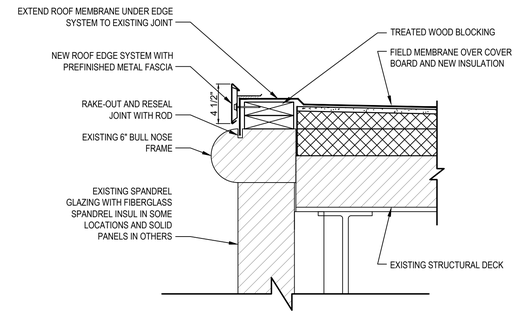

3 A-501 BULLNOSE EDGE DETAIL
SCALE: 1-1/2"=1'-0"

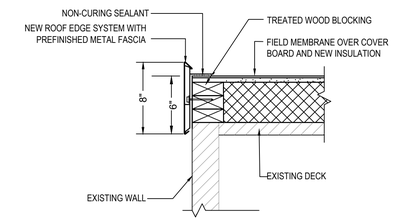

4 A-501 ROOF EDGE DETAIL
SCALE: 1-1/2"=1'-0"

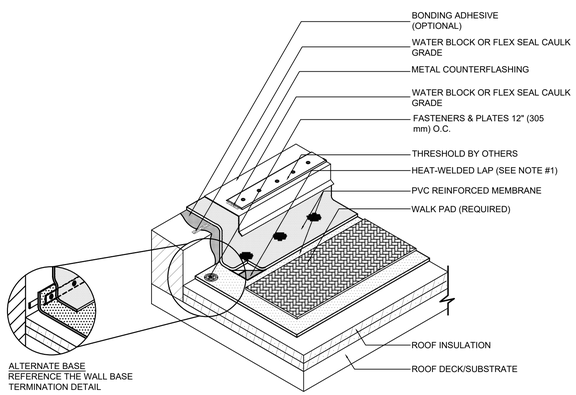

NOTES:
1. FOR HEAT-WELDING LAPS USE 1.5" MIN. WELD WITH AUTOMATIC MACHINE WELDER AND 2" MIN. WELD WITH HAND WELDER.
2. FOR HEIGHTS LESS THAN 8" (203 MM) CONTACT SIPLAST FOR MORE INFORMATION.

5 A-501 DOOR THRESHOLD FLASHING DETAIL
SCALE: NTS

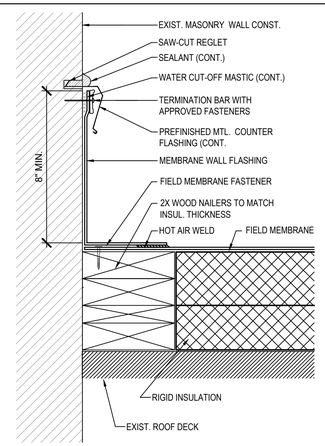

6 A-501 FLASHING AT SAW CUT
SCALE: 3"=1'-0"

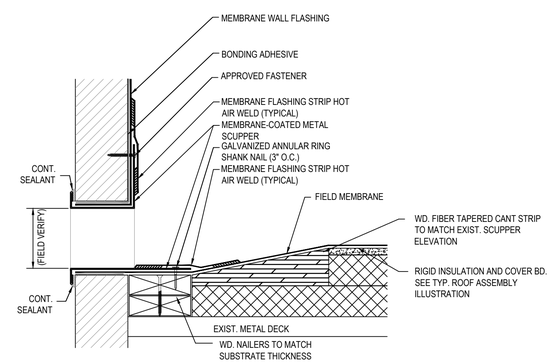

7 A-501 SCUPPER DETAIL
SCALE: NTS

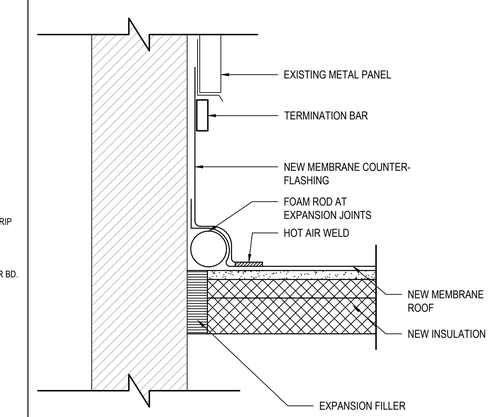

8 A-501 DETAIL AT METAL PANELS
SCALE: 3"=1'-0"

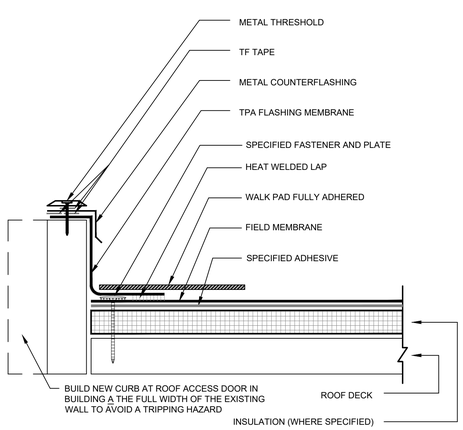

9 A-501 DOOR THRESHOLD FLASHING DETAIL
SCALE: NTS

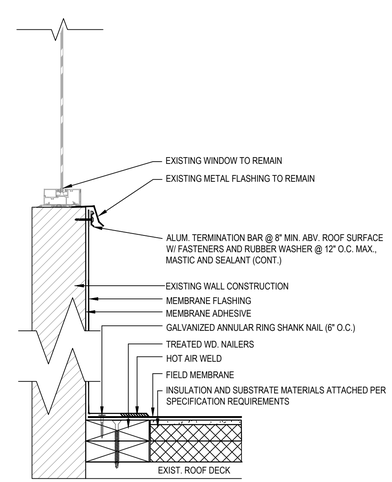

10 A-501 FLASHING AT WINDOW SILL
SCALE: 1-1/2" = 1'-0"

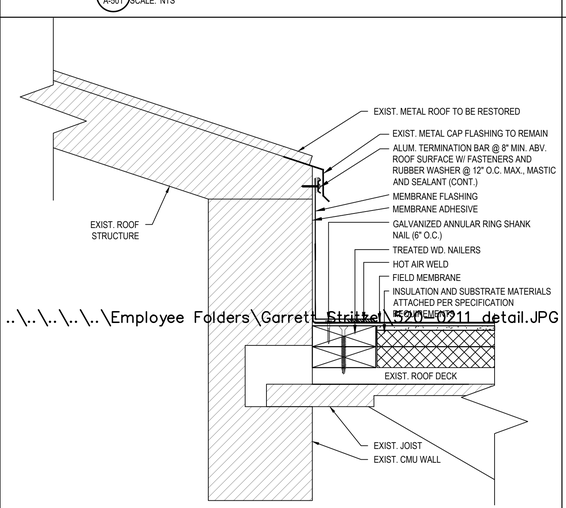

..\..\..\..\..\Employee Folders\Garrett Stritzel\520-0211 detail.JPG

11 A-501 FLASHING AT METAL ROOF EDGE
SCALE: 1-1/2" = 1'-0"

12 A-501 NOT USED
SCALE: 1-1/2"=1'-0"

Hurst-Rosche, Inc.
PROFESSIONAL DESIGN NUMBER: 000372
561 MURFREESBORO PIKE
NASHVILLE, TN
PH: 615.454.6615
www.hurst-rosche.com
EAST ST. LOUIS, IL
MARION, IL
ARNOLD, MO
NEOSHO, MO
NASHVILLE, TN

DEBORAH M. LUNDBERG
REGISTERED ARCHITECT
DEPARTMENT OF AGRICULTURE
OWNER
NO. 103444
STATE OF TENNESSEE

SIGNATURE 04-13-2021
DATE 05-31-2022
LICENSE EXPIRES

REGION 3 HEADQUARTERS BUILDING REROOF
REGION 3 - MIDDLE TENNESSEE
NASHVILLE, DAVIDSON COUNTY, TENNESSEE
SBC No. 243/020-03-2020

MARK	DATE	DESCRIPTION

DATE: 04-13-2021
PROJECT NO: 520-0211

DESIGN:	DRAWN:	CHECK:
DML	CDT	DML

DETAILS

A-501

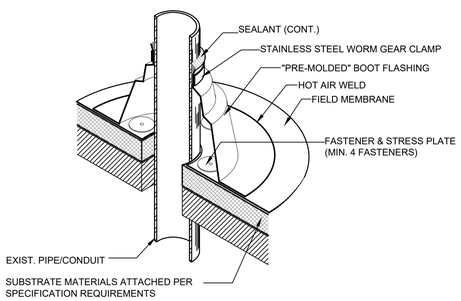

TYP. PRE-MOLDED PIPE FLASHING

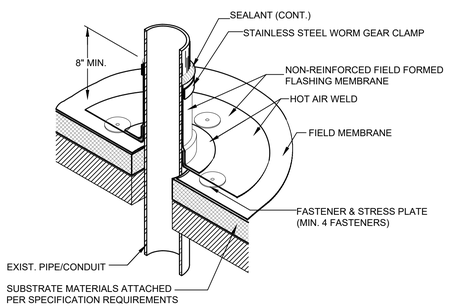

TYP. FIELD FABRICATED PIPE FLASHING

5 A-502 TYPICAL PIPE FLASHING DETAILS
SCALE: NTS

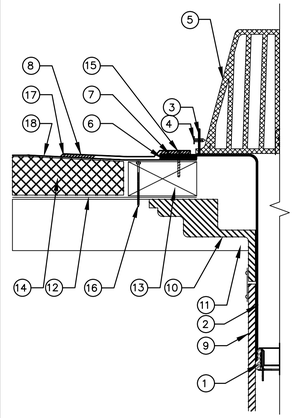

ROOF DRAIN KEYED NOTES	
1.	MECHANICAL WATERTIGHT CONNECTION SEAL
2.	DRAIN BODY
3.	STRAINER DOME RETAINING CLIPS
4.	STRAINER DOME NYLON PUSH-IN FASTENER
5.	ALUMINUM STRAINER DOME
6.	SEALANT (CONT.)
7.	THERMOPLASTIC COATED ALUMINUM FLANGE
8.	WELDED THERMOPLASTIC FLASHING TARGET
9.	EXISTING RAIN WATER LEADER
10.	EXISTING CAST IRON DRAIN BOWL
11.	EXISTING SUBSTRATE
12.	AIR & VAPOR BARRIER
13.	TREATED WOOD NAILER
14.	INSULATION (SLOPED TO DRAIN)
15.	FLANGE FASTENER
16.	WOOD NAILER FASTENER
17.	HOT AIR WELD
18.	FIELD MEMBRANE

2 A-502 TYP. RETRO-FIT ROOF DRAIN DETAIL
SCALE: NTS

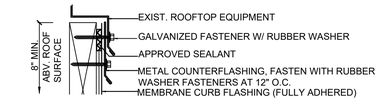

EXISTING EQUIPMENT TO REMAIN

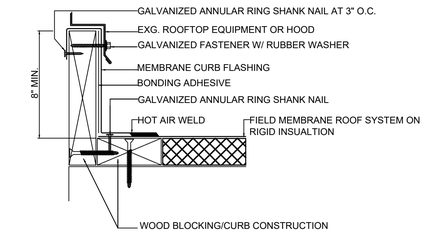

EQUIPMENT REMOVED AND REINSTALLED

3 A-502 TYP. CURB FLASHING DETAILS
SCALE: NTS

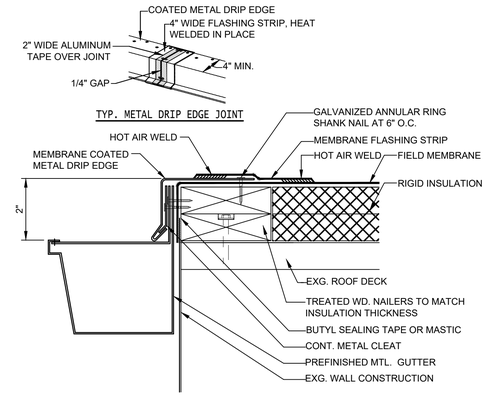

NOTE: INSTALL DOWNSPOUT OUTLET TUBES WHERE INDICATED ON ROOF PLAN. DISCHARGE AT GRADE WITH 45° ELBOW. SIZE AND PROFILE TO MATCH EXISTING

4 A-502 GUTTER DETAIL
SCALE: NTS

6 A-502 NOT USED
SCALE: NTS

7 A-502 NOT USED
SCALE: X"=1'-0"

8 A-502 NOT USED
SCALE: X"=1'-0"

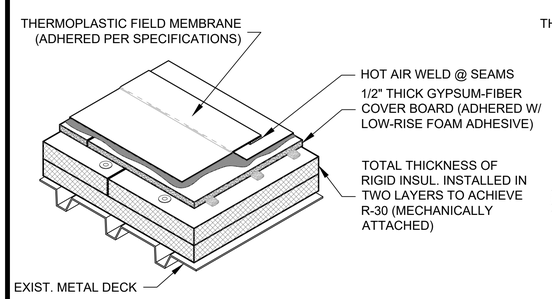

9 A-502 R1 -ROOF ASSEMBLY ILLUSTRARTION AT METAL DECK
SCALE: NTS

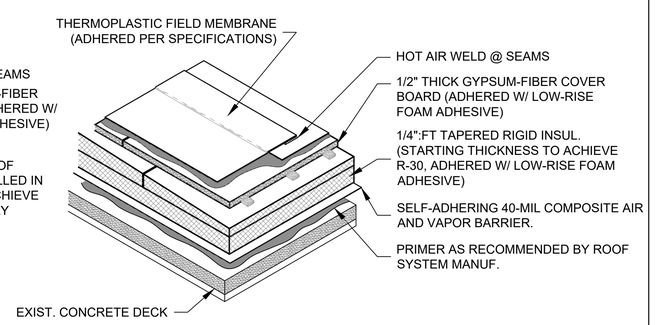

10 A-502 R2 - ROOF ASSEMBLY ILLUSTRARTION AT CONCRETE DECK
SCALE: NTS

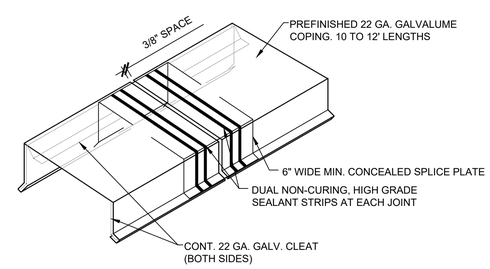

11 A-502 TYP. METAL COPING DETAIL
SCALE: NTS

12 A-502 NOT USED
SCALE: X"=1'-0"

Hurst-Rosche, Inc.
PROFESSIONAL DESIGN NUMBER: 000372
561 MURFREESBORO PIKE
NASHVILLE, TN
PH: 615.454.6615
www.hurst-rosche.com
EAST ST. LOUIS, IL
MARION, IL
ARNOLD, MO
NEOSHO, MO
NASHVILLE, TN

DEBORAH M. LUNDBERG
REGISTERED ARCHITECT
No. 103340
STATE OF TENNESSEE

SIGNATURE
04-13-2021
DATE
05-31-2022
LICENSE EXPIRES

REGION 3 HEADQUARTERS BUILDING REROOF
REGION 3 - MIDDLE TENNESSEE
NASHVILLE, DAVIDSON COUNTY, TENNESSEE
SBC No. 243/020-03-2020

MARK	DATE	DESCRIPTION

DATE: 04-13-2021
PROJECT NO: 520-0211

DESIGN:	DRAWN:	CHECK:
DML	CDT	DML

DETAILS

A-502

DOOR NOTES:

1. ACCEPTABLE MANUFACTURERS :
   A. MESKER
   B. CURRIES
   C. STEELCRAFT
2. DESIGNS AND GAUGE:
   A. EXTERIOR DOOR: ZINC-IRON ALLOY-COATED GALVANNEALED STEEL A60 THAT CONFORMS TO ASTM A653/A653M:
   B. THICKNESS:18 GAUGE
   C. DOOR CONSTRUCTION - NVS - STANDARD SERIES FLUSH DOOR
   D. 18 GAUGE, COLD-ROLLED, GAVANNEALED, OR GALVANIZED G90 STEEL FACE SHEETS TO BE SECURELY BONDED TO THE CORE. DOORS SHALL HAVE HEMMED VERTICAL EDGE SEAMS, MECHANICALLY INTERLOCKED FOR MAXIMUM STRUCTURAL INTEGRITY. TOP AND BOTTOM OF DOORS SHALL BE CLOSED AND REINFORCED WITH AN INVERTED CONTINUOUS CHANNEL AND WELDED TO BOTH FACES. SQUARE EDGE STANDARD. SEAMLESS & FLUSH TOP THE REQUIREMENT
   E. CORE CONSTRUCTION - STANDARD CORE MATERIAL TO BE POLYSTYRENE CORE.
   F. FRAME TO BE FILLED WITH LOW EXPANDING FOAM INSULATION..
   G. FINISH - EXPOSED DOOR SURFACES TO BE CLEANED, TREATED, AND COATED WITH RUST INHIBITIVE PRIMER. COLOR PAINTED DOORS RECEIVE A DURABLE, ELECTROSTATIC, BAKED ON FINISH. WATER- BASED PRIMER AND COLOR PAINT FINISHES ARE FREE OF HAZARDOUS AIR POLLUTANTS (HAPS) AND VOLATILE ORGANIC COMPOUNDS (VOCS).
   H. COMPLIANCE - DOOR UNITS SHALL COMPLY WITH ANSI A250.8 (R2008). HARDWARE PREPARATIONS COMPLY WITH ANSI A250.6. PRIMER AND COLOR COMPLIANT WITH ANSI A250.10 AND ANSI A250.3. FIRE LABELING IN ACCORDANCE WITH NFPA-8015 FM (STANDARD), WHI (INTERTEK), UNDERWRITERS LABORATORIES, AND FM GLOBAL. FOR A COMPLETE LIST OF PRODUCT COMPLIANCE PER ANSI/ASTM TEST METHODS, PLEASE CONSULT PAGES G-11 THROUGH G-14.
   I. DOOR HARDWARE ACCEPTABLE MANUFACTURES:
      NATIONAL GUARE
      STANLEY ARCHITECTURAL BLDG
      PRECISION HARDWARE
      SARGET
      VON DUPRIN
      PEMKO
      ZERO

HARDWARE SET A:

1 EA	CONTINUOUS HINGE	HD1100 X LAR
1 EA	CYLINDER LOCK SET	SARGENT 8 LINE, STOREROOM FUNCTION (COORDINATE WITH OWNER TO KEY THE LOCK TO MATCH EXISTING MASTER KEY)
1 EA	PERIMETER GASKETING	2525 B X LAR
1 EA	THRESHOLD	896A X LAR
1 EA	RAIN DRIP	16 A X +4"ODW
1 EA	DOOR SWEEP-DRIP	101 VA X LAR

HARDWARE SET B:

1 EA	CYLINDER LOCK SET	SARGENT 8 LINE, STOREROOM FUNCTION (COORDINATE WITH OWNER TO KEY THE LOCK TO MATCH EXISTING MASTER KEY)
KEY)		
1 EA	PERIMETER GASKETING	2525 B X LAR
1 EA	THRESHOLD	896A X LAR
1 EA	RAIN DRIP	16 A X +4"ODW
1 EA	DOOR SWEEP-DRIP	101 VA X LAR

DOOR SCHEDULE

MARK	WIDTH	HEIGHT	MATERIAL	FRAME MATERIAL	FINISH	HARDWARE SET	FRAME TYPE	DOOR TYPE	RATING	NOTES
100	3'-0"	4'-2"	HM	HM	PAINT	A	A	A	1 1/2	1,3
101	3'-0"	7'-0"	HM	HM	PAINT	B	-	-	-	2,3
102	3'-0"	7'-0"	HM	HM	PAINT	B	-	-	-	2,3
103	3'-0"	7'-0"	HM	HM	PAINT	B	-	-	-	2,3

DOOR SCHEDULE NOTES:

1. NEW DOOR AND FRAME TO BE INSTALLED. FIELD VERIFY DOOR FRAME SIZE AND LEAF SIZE TO COORDINATE WITH NEW ROOF HEIGHT AND CURB DETAILS 5/A-501 AND 9/A-501.
2. EXISTING DOORS AND FRAMES TO REMAIN. SAND, REPAIR AND REPAINT DOORS AND FRAMES.
3. SEE DETAILS 5/A-501 AND 9/A-501 FOR DOOR SILL DETAILS.

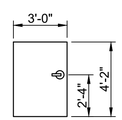

A

DOOR TYPE

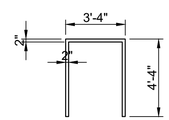

A

FRAME TYPE

1 / A-601 DOOR SCHEDULE AND SPECIFICATION
SCALE: N.T.S.

Hurst-Rosche, Inc.
PROFESSIONAL DESIGN NUMBER: 000372

561 MURFREESBORO PIKE
NASHVILLE, TN
PH: 615.454.6615
www.hurst-rosche.com

EAST ST. LOUIS, IL
MARION, IL
ARNOLD, MO
NEOSHO, MO
NASHVILLE, TN

DEBORAH M. LUNDBERG
REGISTERED ARCHITECT
AGRICULTURE COMMERCE
No. 103444
STATE OF TENNESSEE

SIGNATURE
04-13-2021
DATE
05-31-2022
LICENSE EXPIRES

REGION 3 HEADQUARTERS BUILDING REROOF
REGION 3 - MIDDLE TENNESSEE
NASHVILLE, DAVIDSON COUNTY, TENNESSEE
SBC No. 243/020-03-2020

MARK	DATE	DESCRIPTION

DATE: 04-13-2021
PROJECT NO: 520-0211

DESIGN:	DRAWN:	CHECK:
DML	CDT	DML

DOOR SCHEDULE AND DETAILS

A-601