# HVAC REPLACEMENT
# HILLSBORO HIGH SCHOOL - GYM BUILDING
# HILLSBORO COMMUNITY SCHOOL DISTRICT NO. 3
# HILLSBORO, MONTGOMERY COUNTY, ILLINOIS


ARCHITECT / ENGINEER :

**HURST - ROSCHE, INC.**

**1400 E. TREMONT ST.**
**HILLSBORO, ILLINOIS 62049**
**(217) 532-3959**

200 N. MARKET ST.
MARION, ILLINOIS 62959
(618) 998-0075

NO. 5 BANK SQUARE
EAST ST. LOUIS, ILLINOIS 62203
(618) 398-0890

3675 W. OUTER ROAD, SUITE 101
ARNOLD, MISSOURI 63010
(636) 333-3351

221 EAST MAIN ST.
NEOSHO, MISSOURI 64850
(417) 451-2727

561 MURFREESBORO PIKE
NASHVILLE, TENNESSEE 37210
(615) 454-6615


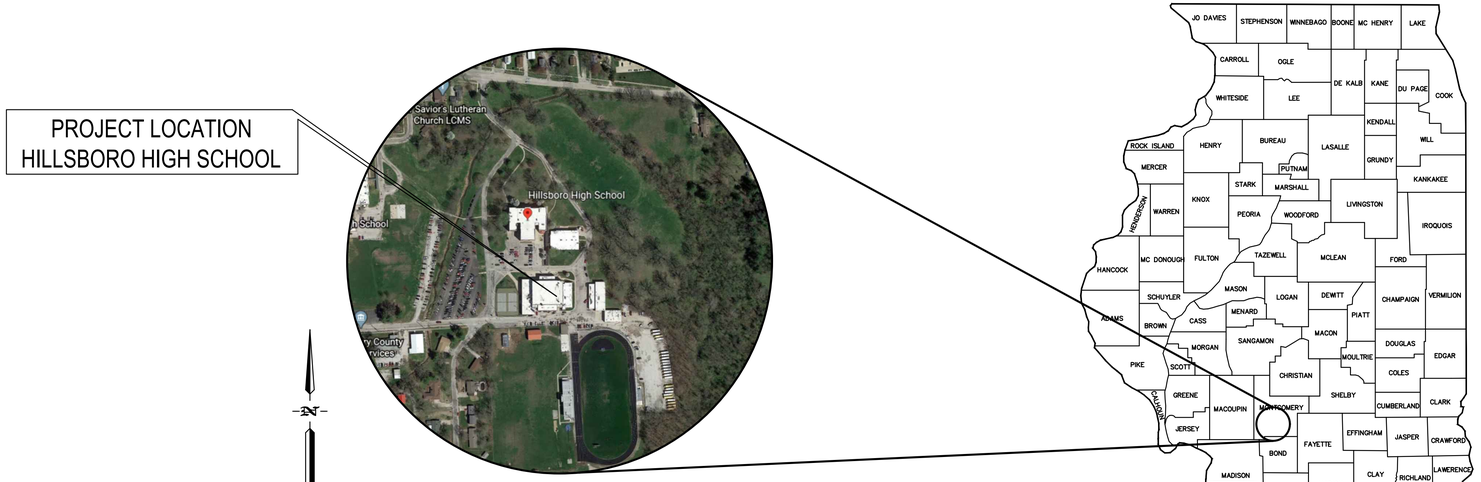


AREA LOCATION MAP

SHEET INDEX:


| | |
|---|---|
| G-101 | COVER SHEET |
| A-101 | STAGE ROOF PLAN & FAN ROOM PLAN |
| A-102 | ALT. BID B1 – CEILING PLAN |
| S-001 | GENERAL NOTES |
| S-101 | LINTEL DETAILS |
| S-102 | RTU SUPPORT DETAILS |
| MD-101 | MECHANICAL DEMOLITION PLAN |
| M-101 | MECHANICAL FLOOR PLAN |
| M-201 | MECHANICAL ROOF PLAN |
| M-401 | SECTION THROUGH GYM |
| M-501 | HVAC SCHEDULES, NOTES & DETAILS |


DATE: MARCH 18, 2020


© 2020 HURST-ROSCHE, INC.

GENERAL NOTES:

1. EXISTING ROOF IS PIB MEMBRANE OVER TAPERED INSULATION OVER WOOD DECKING INSTALLED IN 2009 BY D.E. MARTIN ROOFING CO, INC. ALL ROOFING WORK SHALL BE DONE IN A MANNER TO MAINTAIN EXISTING ROOF WARRANTY. WARRANTY IS #127770 FROM REPUBLIC POWDERED METALS, INC. / TREMCO, INC. CONTACT FOR TREMCO IS DAN JANSSEN, SENIOR FIELD ADVISER; PHONE: 217.306.5610.
2. PRIMING OF THE SUBSTRATE MAY BE REQUIRED. FOLLOW SPECIFICATIONS AND MANUFACTURER RECOMMENDATIONS.
3. REINFORCEMENT MUST BE FULLY SATURATED OR ENCAPSULATED IN BASE COAT.
4. WHERE THE SHEET-METAL ENCLOSURE OVERLAPS THE BASE FLASHING AT LEAST 3 INCHES, THE REMOVABLE SHEET-METAL COUNTERFLASHING IS NOT REQUIRED.

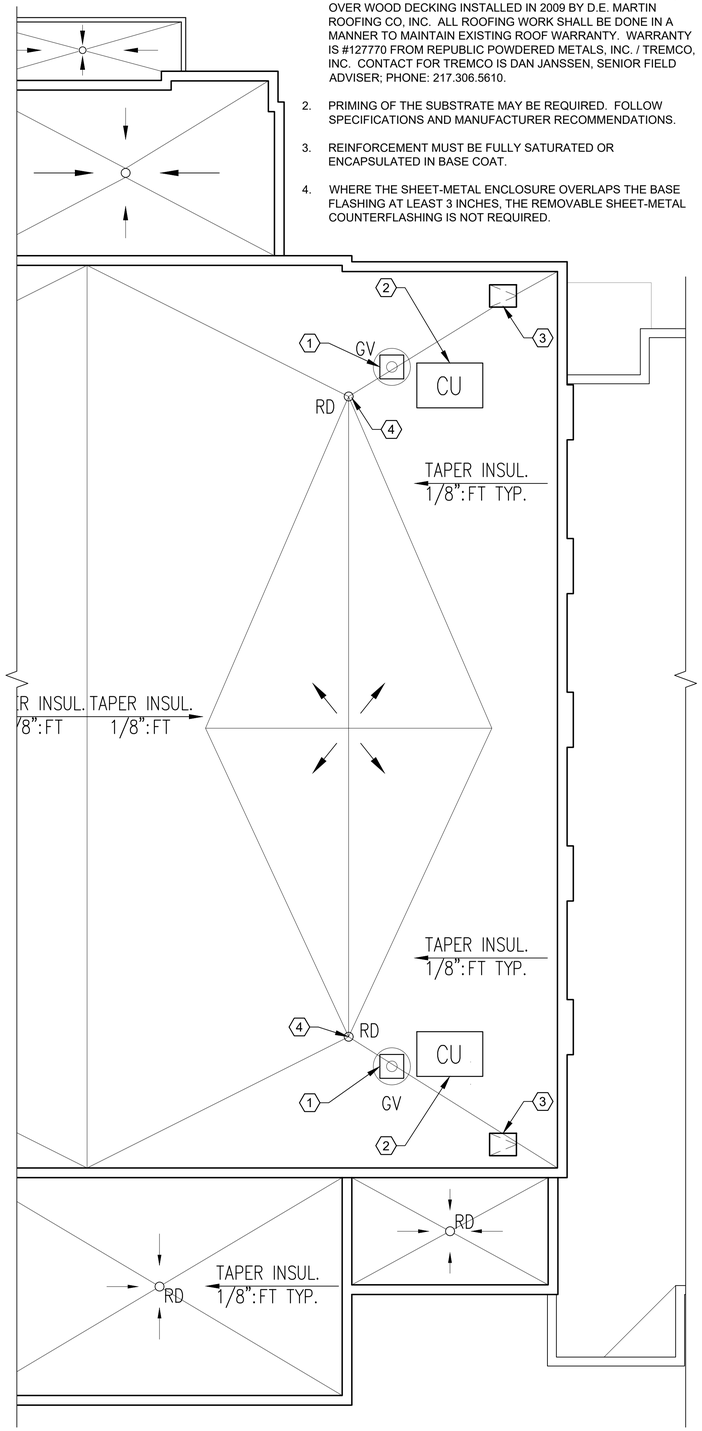


NORTH 1 A-101

## STAGE ROOF PLAN

SCALE: 1/8"=1'-0"

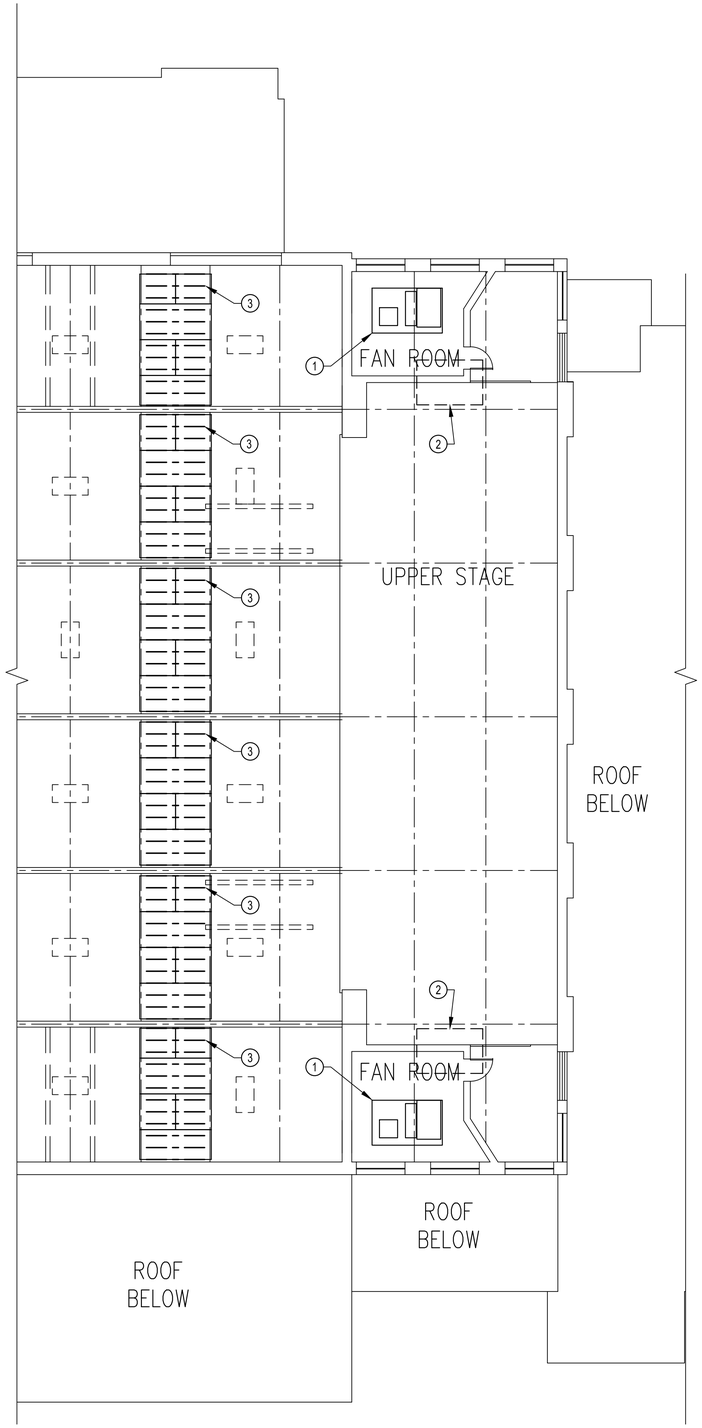


NORTH 2 A-101

## FAN ROOM PLAN

SCALE: 1/8"=1'-0"

ROOF KEYED NOTES: (X)

1. DEMO AND REMOVE EXISTING GRAVITY VENT AND CAP CURB WEATHER TIGHT.
2. CONDENSING UNIT ON STRUCTURAL STEEL SUPPORT. FLASH (4) FOUR PIPE PENETRATIONS PER UNIT AS DETAILED ON 3/A-101. FLASH EACH CONDUIT PENETRATION AS DETAILED ON 4/A-101.
3. EXISTING ROOF HATCH - NO WORK.
4. EXISTING ROOF DRAIN - NO WORK.

FAN ROOM KEYED NOTES: ◯

1. AIR HANDLING UNIT - SEE M-SHEETS. BASE BID INCLUDES PREP, PRIME AND PAINT ALL DUCTWORK / DIFFUSERS (SUPPLY, OUTSIDE AIR AND RETURN) AS PER SECTION 09 90 00.
2. CONDENSING UNIT ABOVE - SEE ROOF PLAN AND M-SHEETS.
3. ALTERNATE BID B1 WORK - SEE A-102.

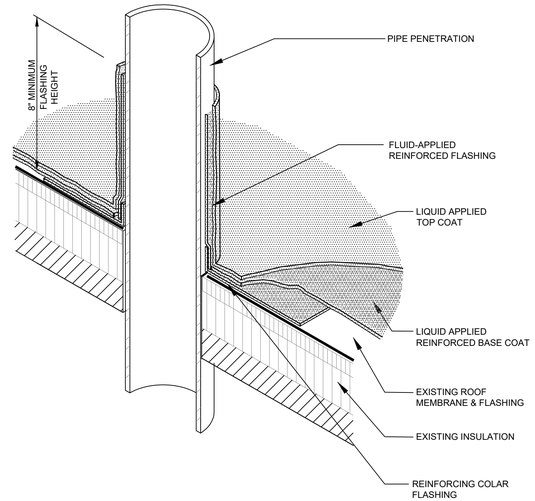


3 A-101

## TYP. PIPE PENETRATION

SCALE: N.T.S.

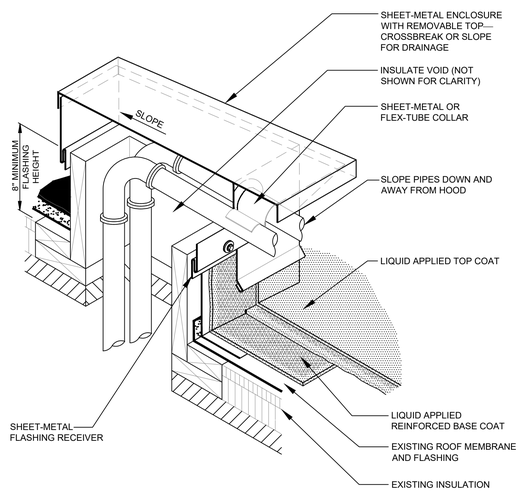


4 A-101

## SHEET METAL ENCLOSURE DETAIL

SCALE: N.T.S.


Hurst-Rosche, Inc.
PROFESSIONAL DESIGN NUMBER: 184-000298
1400 E. TREMONT STREET
HILLSBORO, IL
PH:217.532.3959

EAST ST. LOUIS, IL
MARION, IL
ARNOLD, MO
NEOSHO, MO
NASHVILLE, TN


LICENSED ARCHITECT
TIMOTHY L DOWNEN
001.021928
STATE OF ILLINOIS

SIGNATURE
02-06-2020
DATE
11-30-2020
LICENSE EXPIRES


WRFT ENGINEERS, LLC
112 N. KANSAS STREET
EDWARDSVILLE, IL 62025
P: 618-659-8709
P: 618-656-8353


HVAC REPLACEMENT
HILLSBORO HIGH SCHOOL - GYM BUILDING
HILLSBORO COMMUNITY SCHOOL DISTRICT No. 3
HILLSBORO, MONTGOMERY COUNTY, ILLINOIS

| MARK | DATE | DESCRIPTION |
|---|---|---|
| | | |
| | | |
| | | |

DATE: 03-16-2020
PROJECT NO: 150-3209

| DESIGN: | DRAWN: | CHECK: |
|---|---|---|
| TLD | NAL | TLD |

STAGE ROOF PLAN & FAN ROOF PLAN

A-101

© 2020 HURST-ROSCHE, INC.

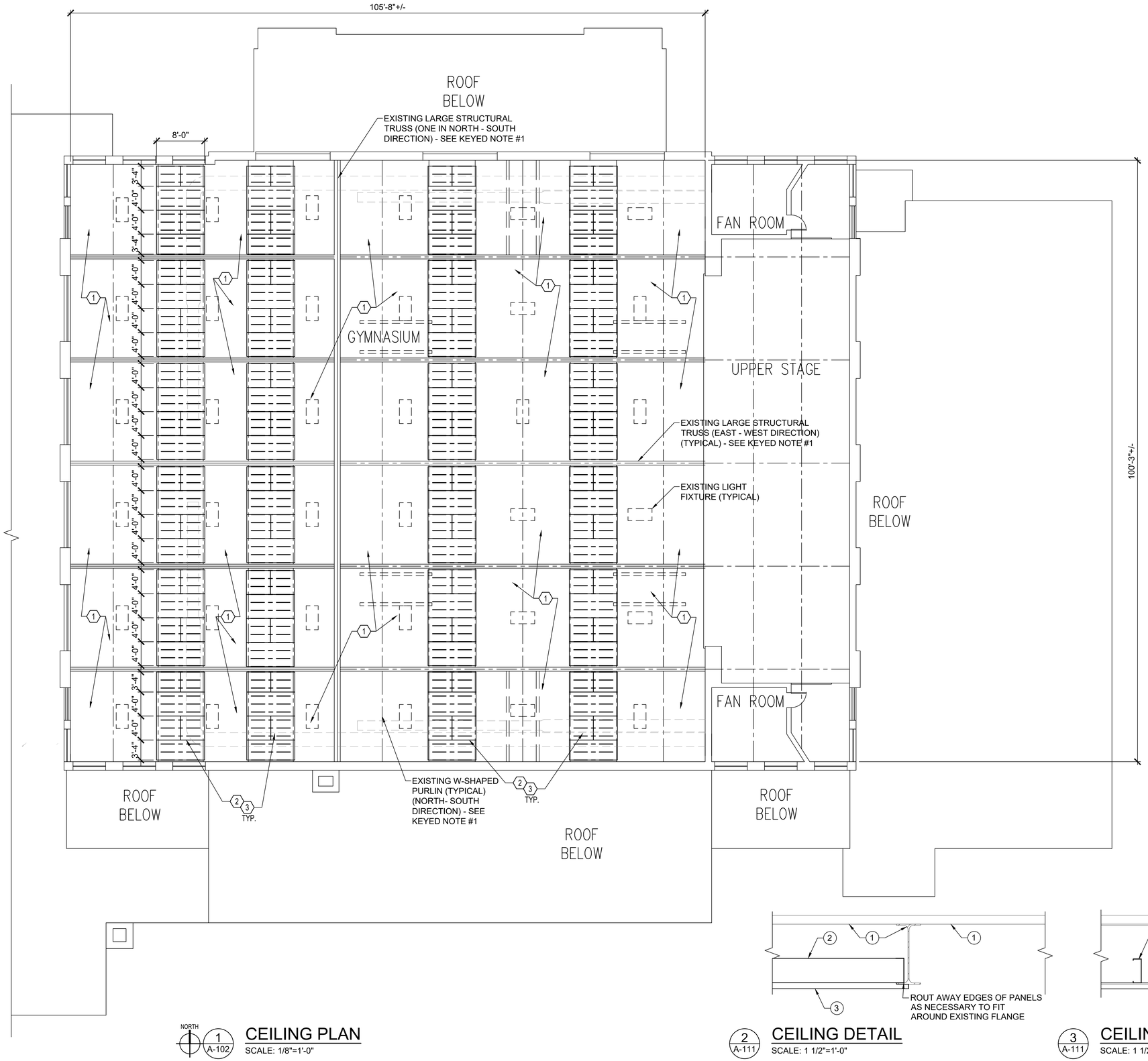


KEYED NOTES: (X)

1. CLEAN, PREP, PRIME & PAINT EXG. WOOD ROOF DECK, STRUCT. STEEL GIRDERS, JOISTS, PURLINS, CROSS BRACING AND ALL RELATED ACCESSORIES.
2. 4 INCH TALL 1-3/8 INCH WIDE CS COLD FORMED METAL 33 GAGE STUDS @ 16" O.C.
3. 12'-0" (CUT INTO 8'-0" AND 4'-0" PIECES AS INDICATED) BY 4'-0" BY 1-1/2" THICK TECTUM ACOUSTICAL PANELS ATTACHED TO STUDS (TRIMMED AS DIMENSIONED NEAR EXTERIOR WALLS). FIELD FINISH PANELS WITH MATERIALS IN KEYED NOTE #1.

GENERAL NOTES:

1. BASE BID INCLUDES THE REMOVAL AND LEGAL DISPOSAL OF EXISTING THIN ACOUSTICAL PILLOWS AND ALL RELATED ACCESSORIES AS NECESSARY FOR DUCT ROUTING ONLY. SEE PLAN AND M-SHEETS FOR ADDITIONAL INFORMATION ON DUCT ROUTING.
2. ALTERNATE BID B1 INCLUDES THE REMOVAL AND LEGAL DISPOSAL OF ALL EXISTING THIN ACOUSTICAL PILLOWS THROUGHOUT THE GYMNASIUM.
3. SEE S-SHEETS FOR LIMITS OF MASONRY WORK. NEW AND DAMAGED MASONRY AS A RESULT OF LINTEL WORK TO BE PREPPED, PRIMED AND PAINTED AS PER SECTION 09 90 00 UNDER THE BASE BID.




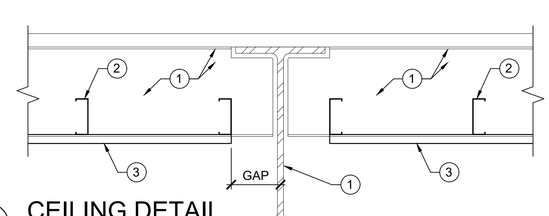


NORTH

1 / A-102 CEILING PLAN
SCALE: 1/8"=1'-0"

2 / A-111 CEILING DETAIL
SCALE: 1 1/2"=1'-0"

3 / A-111 CEILING DETAIL
SCALE: 1 1/2"=1'-0"


Hurst-Rosche, Inc.
PROFESSIONAL DESIGN NUMBER: 184-000298
1400 E. TREMONT STREET
HILLSBORO, IL
PH:217.532.3959

EAST ST. LOUIS, IL
MARION, IL
ARNOLD, MO
NEOSHO, MO
NASHVILLE, TN


LICENSED ARCHITECT
TIMOTHY L DOWNEN
001.021928
STATE OF ILLINOIS

SIGNATURE
02-06-2020
DATE
11-30-2020
LICENSE EXPIRES


WRF ENGINEERS, LLC
112 N. KANSAS STREET
EDWARDSVILLE, IL 62025
P: 618-659-8709
P: 618-656-8353


HVAC REPLACEMENT
HILLSBORO HIGH SCHOOL - GYM BUILDING
HILLSBORO COMMUNITY SCHOOL DISTRICT No. 3
HILLSBORO, MONTGOMERY COUNTY, ILLINOIS

| MARK | DATE | DESCRIPTION |
|---|---|---|
| | | |
| | | |
| | | |

DATE: 03-16-2020
PROJECT NO: 150-3209

| DESIGN: | DRAWN: | CHECK: |
|---|---|---|
| TLD | NAL | TLD |

ALT. BID B1 - CEILING PLAN

A-102

© 2020 HURST-ROSCHE, INC.

## 1. DESIGN CRITERIA:

A. CODES AND STANDARDS:
ALL DESIGN AND CONSTRUCTION WORK FOR THIS PROJECT SHALL CONFORM TO THE 2015 INTERNATIONAL BUILDING CODE.
B. LIVE LOAD DATA:
ROOF.....20 PSF
ALL LIVE LOADS NON-REDUCIBLE
C. SNOW LOAD DATA:
GROUND SNOW LOAD.....20 PSF
FLAT ROOF SNOW LOAD.....22 PSF
SNOW EXPOSURE FACTOR.....1.0
SNOW LOAD IMPORTANCE FACTOR.....1.10
THERMAL EXPOSURE FACTOR.....1.0
DESIGN SNOW LOAD.....22 PSF
D. IN CASE OF CONFLICT BY GOVERNING CODES, THE MOST STRINGENT REQUIREMENT SHALL GOVERN.

## 2. STRUCTURAL STEEL:

A. ALL STRUCTURAL STEEL SHALL BE DETAILED, FABRICATED, AND ERECTED IN ACCORDANCE WITH THE AISC CODE OF STANDARD PRACTICE, EXCEPT AS MODIFIED IN THESE NOTES AND THE PROJECT SPECIFICATIONS.
B. ALL STRUCTURAL STEEL EXPOSED TO VIEW ON INTERIOR OR EXTERIOR OF THE BUILDING SHALL CONFORM TO THE REQUIREMENTS OF ARCHITECTURALLY EXPOSED STEEL OF AISC CODE OF STANDARD PRACTICE SECTION 10.
C. ALL WELDS EXPOSED TO VIEW SHALL BE GROUND SMOOTH.
D. SPLICING OF STEEL MEMBERS, UNLESS SHOWN ON THE DRAWINGS, IS PROHIBITED WITHOUT WRITTEN APPROVAL OF THE ARCHITECT/ENGINEER.
E. NO CHANGE IN SIZE OR POSITION OF STRUCTURAL ELEMENTS SHALL BE MADE AND HOLES, SLOTS, CUTS, ETC. ARE NOT PERMITTED THROUGH ANY MEMBER UNLESS THEY ARE APPROVED BY THE ARCHITECT/ENGINEER.
F. ALL ADDITIONAL STEEL OR OTHER MATERIALS REQUIRED BY THE CONTRACTOR FOR ERECTION PURPOSES AND SITE ACCESS OF STOCKPILED MATERIALS SHALL BY PROVIDED AT NO COST TO THE OWNER. ALL SUCH ADDITIONAL MATERIALS SHALL BE REMOVED BY THE CONTRACTOR UNLESS APPROVED BY THE OWNER IN WRITING.
G. WIDE FLANGE SHAPES SHALL BE GRADE ASTM A992. ANGLES SHALL BE GRADE ASTM A36. PLATES SHALL BE GRADE ASTM A572. HSS ROUND SHAPES SHALL BE GRADE A500 GRADE B, Fy = 42 KSI.
H. U.N.O. THE MINIMUM PLATE THICKNESS SHALL BE 1/4", THE MINIMUM BOLT DIAMETER SHALL BE 5/8", THE MINIMUM WELD SHALL BE 3/16" AND THE MINIMUM DESIGN LOAD ON ANY CONNECTION SHALL BE 10 KIPS. BOLT HOLES SHALL BE STANDARD 1/16" DIAMETER LARGER THAN BOLT.
I. PROVIDE WELDED STIFFENER PLATES ON BOTH SIDES OF THE WEB OF BEAMS AT POINT OF CONCENTRATED LOADS, INCLUDING BEAMS SUPPORTING THE LOCATION OF THE CHANGE OF SLOPE (KINKS) AT ANY MEMBER. MINIMUM STIFFENER PLATE THICKNESS SHALL BE 1/2" OR FLANGE THICKNESS OF THE COLUMN ABOVE OR BELOW, WHICH EVER IS GREATER.
J. ALL EXTERIOR EXPOSED STEEL SHALL BE HOT-DIPPED GALVANIZED PER ASTM A123, U.N.O.
K. BOLTED CONNECTION:
a. ALL EXTERIOR EXPOSED BOLTS, NUTS, AND WASHERS SHALL BE TYPE 3 U.N.O.
b. SHOP DRAWINGS SHALL INDICATE THE TYPE OF BOLT USED IN EACH CONNECTION AND THE DESIGN VALUES USED FOR THE VARIOUS BOLT TYPES.
L. NO FINAL BOLTING OR WELDING SHALL BE MADE UNTIL AS MUCH OF THE STRUCTURE AS WILL BE STIFFENED THEREBY HAS BEEN PROPERLY ALIGNED.
M. FABRICATE ALL BEAMS WITH THE MILL CAMBER UP.
N. ALL CONNECTION TO BE SHOP WELDED AND FIELD BOLTED WHERE PRACTICALLY POSSIBLE EXCEPT AS INDICATED ON DRAWINGS.
O. ALL STRUCTURAL STEEL SHALL HAVE ONE SHOP COAT OF RUST INHIBITING PRIMER PAINT CONFORMING TO PROJECT SPECIFICATIONS. FIELD TOUCH UP ALL UNPAINTED AREAS.

## 3. EXISTING CONDITIONS:

A. BECOME FAMILIAR WITH EXISTING CONDITIONS PRIOR TO BIDDING. PROVIDE NECESSARY MEANS AND METHODS TO ACCOMPLISH THE SPECIFIED WORK.
B. FIELD VERIFY CONDITIONS, SIZES, SPACINGS, AND DIMENSIONS OF EXISTING STRUCTURE TO FABRICATIONS AND NEW CONSTRUCTION. CONTACT THE STRUCTURAL ENGINEER IF EXISTING CONDITIONS, ETC. VARY FROM THOSE SHOWN ON THESE DRAWINGS.
C. CONTRACTOR IS RESPONSIBLE FOR TEMPORARY REMOVAL AND REPLACEMENT/RELOCATION OF ANY NON-STRUCTURAL ELEMENTS NECESSARY TO COMPLETE THE STRUCTURAL WORK. FOLLOW ALL APPLICABLE CODES AND REQUIREMENTS OF AFFECTED TRADES. PROVIDE FOR THIS REQUIREMENT IN THE BID.

## 4. MISCELLANEOUS:

A. STRUCTURAL DRAWINGS ARE INTENDED TO BE USED WITH ARCHITECTURAL AND MECHANICAL DRAWINGS. CONTRACTOR IS RESPONSIBLE FOR COORDINATING SUCH REQUIREMENTS, SHOP DRAWINGS, AND WORK.
B. NO OPENING SHALL BE MADE IN ANY STRUCTURAL MEMBER WITHOUT THE WRITTEN APPROVAL OF THE ARCHITECT/ENGINEER.
C. NO CHANGE IN SIZE OR DIMENSION OF STRUCTURAL MEMBERS SHALL BE MADE WITHOUT THE WRITTEN APPROVAL OF THE ARCHITECT/ENGINEER.
D. THE CONTRACTOR IS RESPONSIBLE FOR LIMITING THE AMOUNT OF CONSTRUCTION LOAD IMPOSED UPON STRUCTURAL FRAMING. CONSTRUCTION LOADS SHALL NOT EXCEED THE DESIGN CAPACITY OF THE FRAMING AT THE TIME LOADS ARE IMPOSED.
E. THE STRUCTURE IS DESIGNED TO FUNCTION AS A UNIT UPON COMPLETION. THE CONTRACTOR IS RESPONSIBLE FOR FURNISHING ALL TEMPORARY BRACING AND/OR SUPPORT THAT MAY BE REQUIRED AS THE RESULT OF THE CONTRACTOR'S CONSTRUCTION METHODS AND/OR SEQUENCES.
F. DO NOT SCALE THESE DRAWINGS, USE DIMENSIONS.
G. THE CONTRACTOR SHALL INFORM THE ARCHITECT/ENGINEER IN WRITING OF ANY DEVIATION FROM THE CONTRACT DOCUMENTS. THE CONTRACTOR SHALL NOT BE RELIEVED OF THE RESPONSIBILITY FOR SUCH DEVIATION BY THE ARCHITECT'S APPROVAL OF SHOP DRAWINGS, PRODUCT DATA, ETC., UNLESS HE/SHE HAS SPECIFICALLY INFORMED THE ARCHITECT/ENGINEER OF SUCH DEVIATION AT THE TIME OF SUBMISSION, AND THE ARCHITECT/ENGINEER HAS GIVEN WRITTEN APPROVAL TO THE SPECIFIC DEVIATION.
H. ALL THINGS WHICH, IN THE OPINION OF THE CONTRACTOR, APPEAR TO BE DEFICIENCIES, OMISSIONS, CONTRADICTIONS, OR AMBIGUITIES, IN THE PLANS AND SPECIFICATIONS SHALL BE BROUGHT TO THE ATTENTION OF THE ARCHITECT/ENGINEER. PLANS AND/OR SPECIFICATIONS WILL BE CORRECTED, OR WRITTEN INTERPRETATION OF THE ALLEGED DEFICIENCY, OMISSION, CONTRADICTION OR AMBIGUITY WILL BE MADE BY THE ARCHITECT/ENGINEER BEFORE THE AFFECTED WORK PRECEEDS.
I. FURNISH ALL LABOR, MATERIALS, AND EQUIPMENT NECESSARY TO COMPLETE THE WORK SHOWN OR INFERRED BY THESE DRAWINGS.
J. DETAILS LABELED "TYPICAL DETAILS" ON THE DRAWINGS SHALL APPLY TO ALL SITUATIONS OCCURRING ON THE PROJECT THAT ARE THE SAME OR SIMILAR TO THOSE SPECIFICALLY DETAILED. THE APPLICABILITY OF THE DETAIL TO ITS LOCATION ON THE PLANS CAN BE DETERMINED BY THE TITLE OF THE DETAIL. SUCH DETAILS SHALL APPLY WHETHER OR NOT THEY ARE KEYED IN AT EACH LOCATION. DECISIONS REGARDING APPLICABILITY OF TYPICAL DETAILS SHALL BE DETERMINED BY THE ARCHITECT/ENGINEER.
K. REVIEW OF THE SHOP DRAWINGS SHALL NOT BE CONSTRUED AS AN AUTHORIZATION TO DEVIATE FROM CONTRACT DOCUMENTS.

## 5. MECHANICAL AND ADHESIVE ANCHORS:

A. ALL MECHANICAL AND ADHESIVE ANCHORS TO HAVE CURRENT ICC REPORTS FOR USE ON THIS PROJECT.
B. ALL ANCHORS SHALL BE INSTALLED IN ACCORDANCE WITH ICC AND MANUFACTURE RECOMMENDATIONS.
C. CONFIRM FINAL ANCHOR LOCATIONS PRIOR TO FABRICATING PLATES, MEMBERS, OR OTHER STEEL ASSEMBLIES ATTACHED WITH MECHANICAL OR ADHESIVE ANCHORS.

## 6. ITEMS ANCHORED TO PRIMARY STRUCTURE:

A. DESIGN PRE-ENGINEERED STRUCTURES AND ITEMS TO BE ANCHORED TO THE PRIMARY STRUCTURE IN ACCORDANCE WITH 2015 INTERNATIONAL BUILDING CODE.
B. PROVIDE COMPLETE DESIGN FOR GRAVITY AND SEISMIC FORCES. SUBMIT TO OWNER'S REPRESENTATIVE CALCULATIONS AND DRAWINGS SHOWING ALL ATTACHMENT DETAILS TO PRIMARY STRUCTURE AND LOCATION, DIRECTION, AND MAGNITUDE OF ALL GRAVITY AND SEISMIC LOADS TRANSMITTED TO PRIMARY STRUCTURE IN EXCESS OF 250 LBS.
C. CONNECTIONS OF ITEMS TO THE PRIMARY STRUCTURE SHALL NOT RESULT IN TORSION IN THE SUPPORTING STRUCTURAL MEMBERS.
D. ALL HANGERS FOR DUCTWORK, PIPE WORK, ETC. SHALL BE HUNG DIRECTLY FROM STRUCTURAL MEMBERS OR SUPPLEMENTARY MEMBERS. THE LOCATION AND ORIENTATIONS OF THESE HANGERS SHALL NOT IMPAIR THE LOAD CAPACITY OF THE STRUCTURAL MEMBERS.
E. THE RESPECTIVE TRADES SHALL DESIGN AND PROVIDE REINFORCING OR SUPPLEMENTAL FRAMING AS REQUIRED FOR THEIR CONNECTIONS.
F. SEE ARCHITECTURAL AND MECHANICAL DRAWINGS AND SPECIFICATIONS FOR ADDITIONAL REQUIREMENTS.

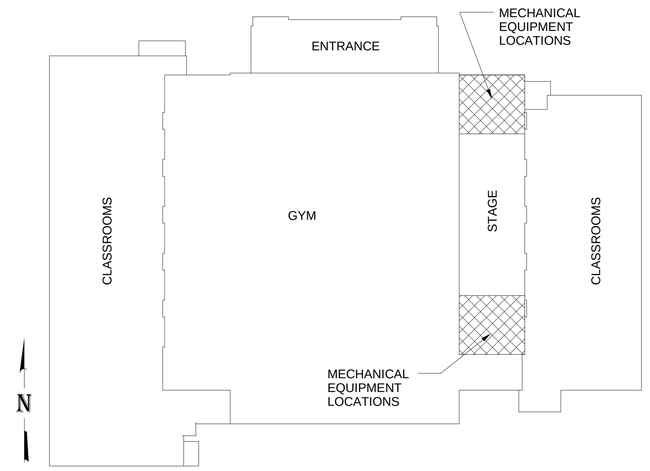


KEYPLAN

HURST-ROSCHE, INC.
PROFESSIONAL DESIGN NUMBER: 184-000298

1400 E. TREMONT STREET
HILLSBORO, IL
PH:217.532.3959
www.hurst-rosche.com

MARION, IL
EAST ST. LOUIS, IL
ARNOLD, MO
NEOSHO, MO
NASHVILLE, TN

LICENSED STRUCTURAL ENGINEER
CHASE J. CONNOR
081-007200
HILLSBORO ILLINOIS
STATE OF ILLINOIS

SIGNATURE
03-18-2020
DATE
11-30-2020
LICENSE EXPIRES

WRF ENGINEERS, LLC
112 N. KANSAS STREET
EDWARDSVILLE, IL 62025
P: 618-659-8709
P: 618-656-8353

HVAC REPLACEMENT
HILLSBORO HIGH SCHOOL GYM BUILDING
HILLSBORO COMMUNITY SCHOOL DISTRICT No.3
HILLSBORO, MONTGOMERY COUNTY, ILLINOIS

| MARK | DATE | DESCRIPTION |
|---|---|---|
| | | |
| | | |
| | | |

DATE: 03-18-2020
PROJECT NO: 150-3209

| DESIGN: | DRAWN: | CHECK: |
|---|---|---|
| CJC | NAL | JJC |

GENERAL NOTES

S-001

© 2020 HURST-ROSCHE, INC.

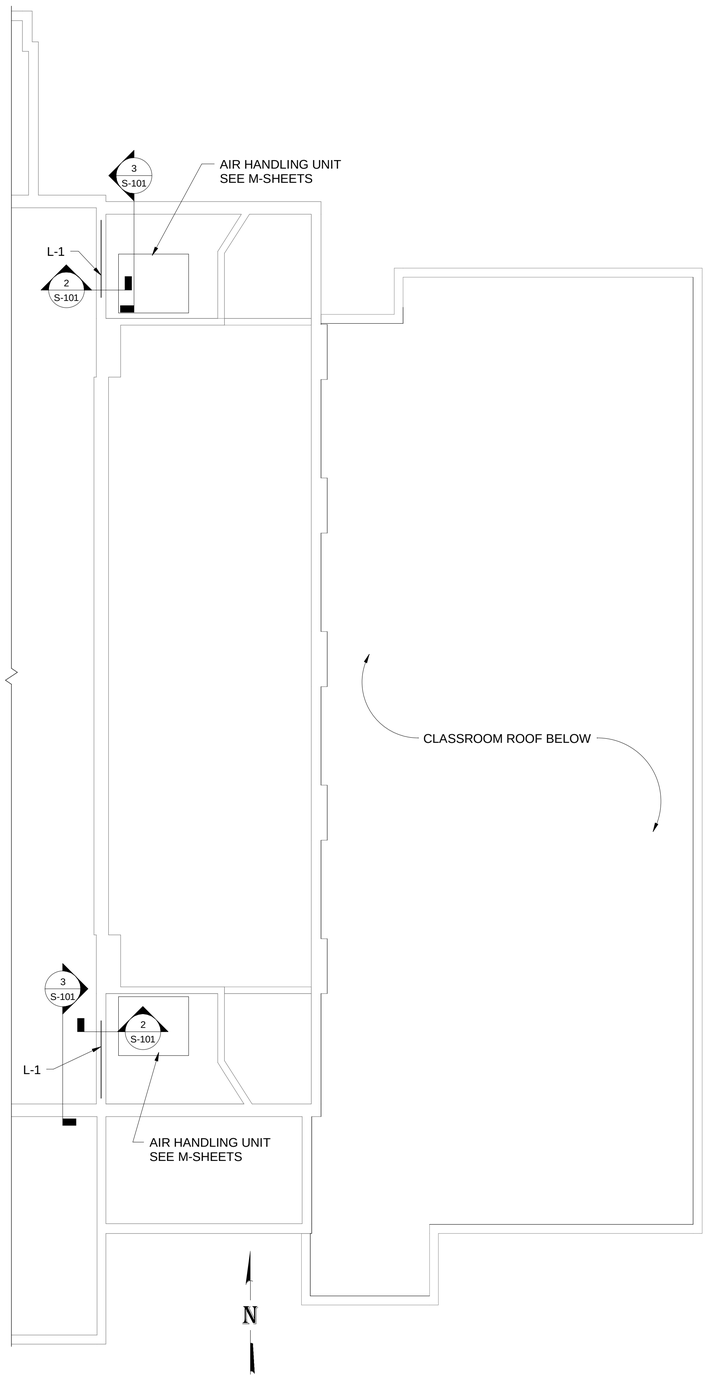


1 Mezzanine Plan
1/8" = 1'-0"

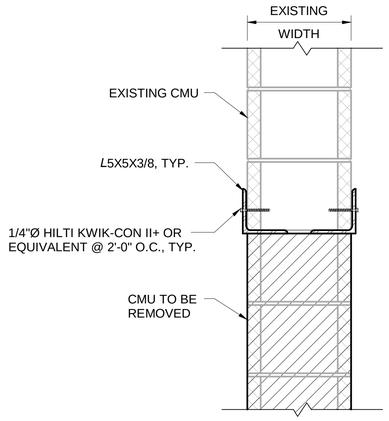


DEMO

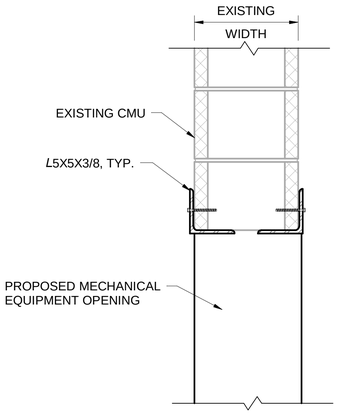


PROPOSED

2 Typical L-1 Section
1 1/2" = 1'-0"

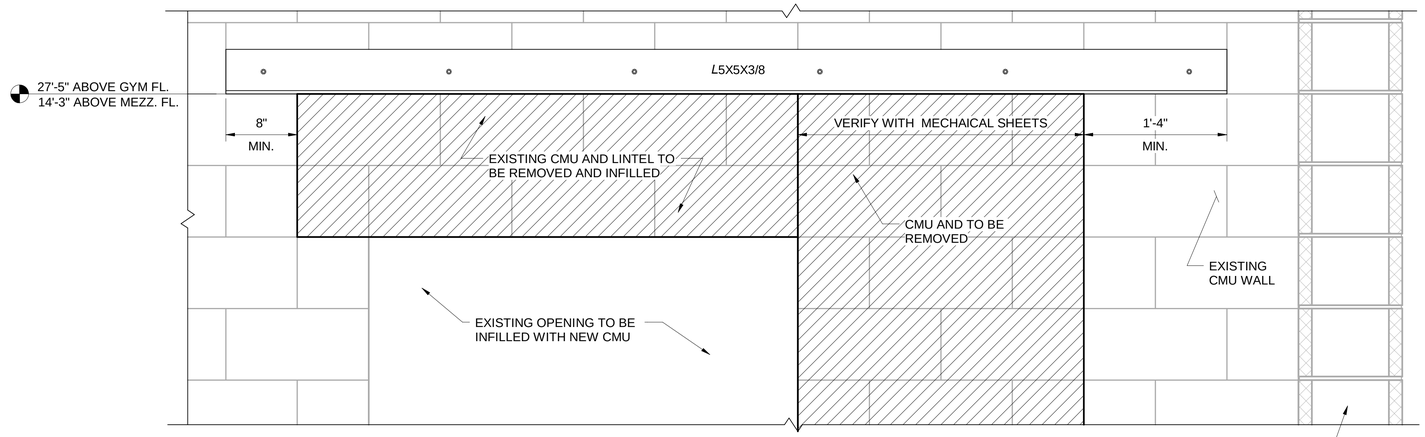


DEMO

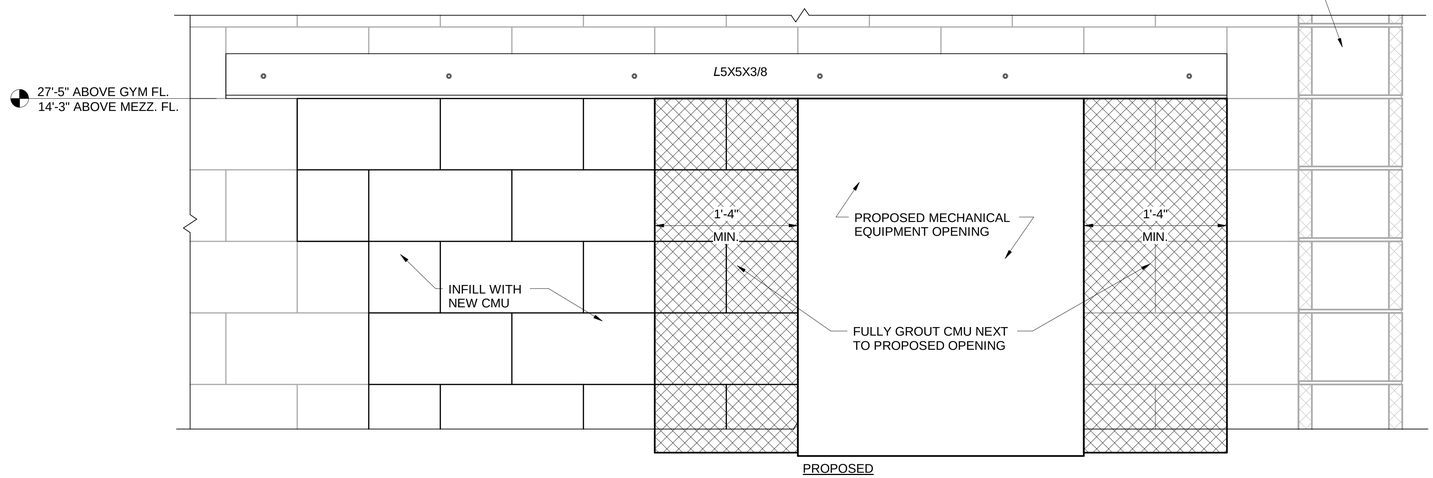


PROPOSED

3 Typical L-1 Elevation
1 1/2" = 1'-0"

HURST-ROSCHE, INC.
PROFESSIONAL DESIGN NUMBER: 184-000298

**1400 E. TREMONT STREET**
**HILLSBORO, IL**
**PH:217.532.3959**
www.hurst-rosche.com
**MARION, IL**
**EAST ST. LOUIS, IL**
**ARNOLD, MO**
**NEOSHO, MO**
**NASHVILLE, TN**

LICENSED STRUCTURAL ENGINEER
CHASE J. CONNOR
081-007200
HILLSBORO ILLINOIS
STATE OF ILLINOIS

SIGNATURE
DATE 03-18-2020
LICENSE EXPIRES 11-30-2020

WRF ENGINEERS, LLC
112 N. KANSAS STREET
EDWARDSVILLE, IL 62025
P: 618-659-8709
P: 618-656-8353

HVAC REPLACEMENT
HILLSBORO HIGH SCHOOL GYM BUILDING
HILLSBORO COMMUNITY SCHOOL DISTRICT No.3
HILLSBORO, MONTGOMERY COUNTY, ILLINOIS

| MARK | DATE | DESCRIPTION |
|---|---|---|
| | | |
| | | |
| | | |

DATE: 03-18-2020
PROJECT NO: 150-3209
DESIGN: CJC | DRAWN: NAL | CHECK: JJC

LINTEL DETAILS

S-101

© 2020 HURST-ROSCHE, INC.

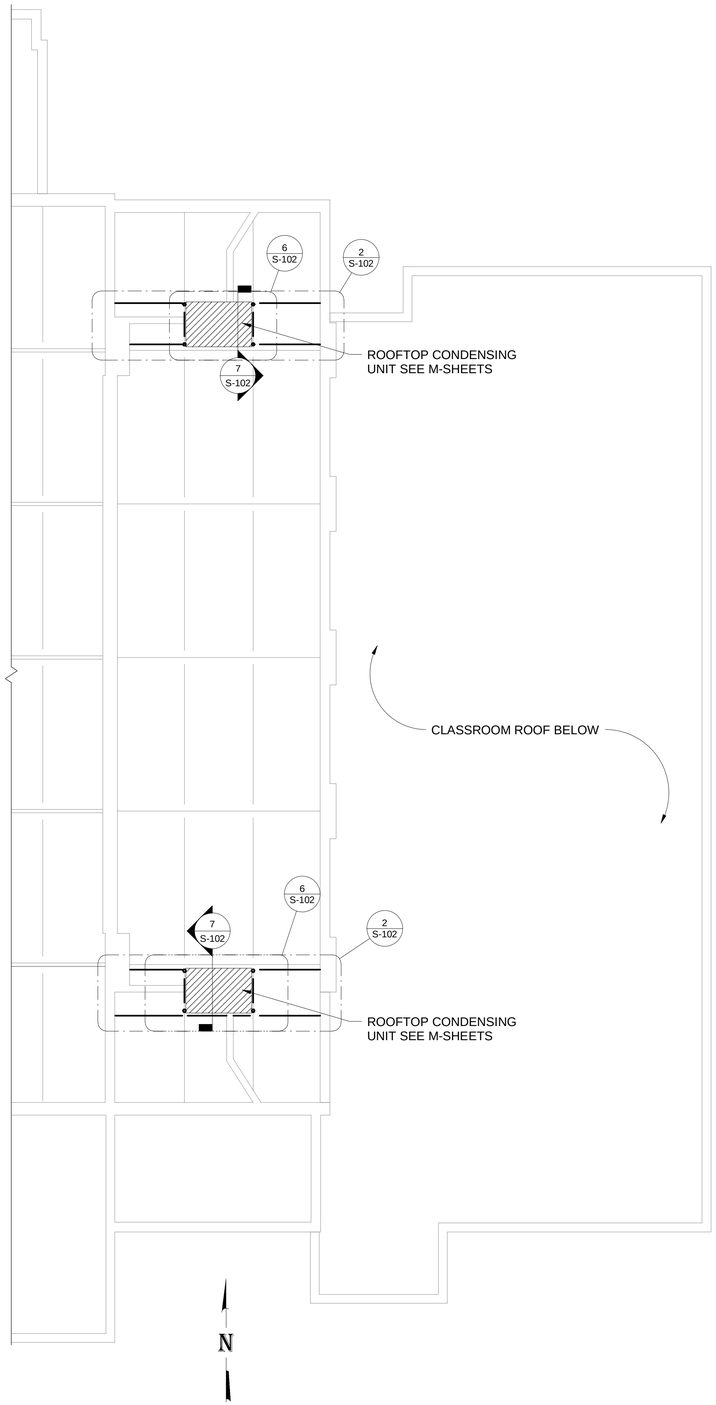


1 Roof Plan
1/8" = 1'-0"

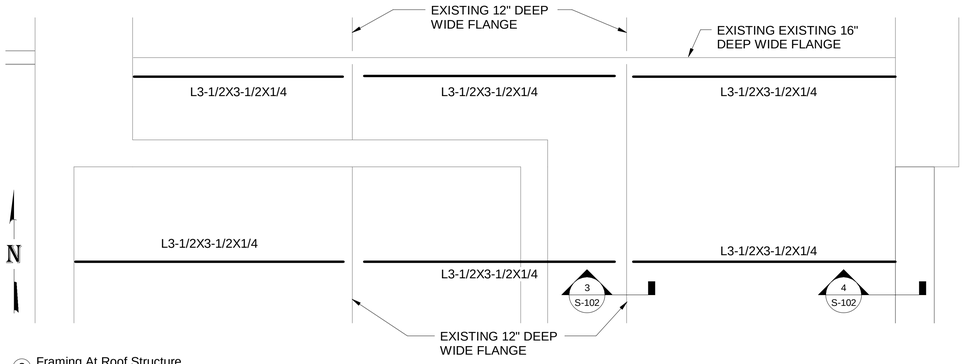


2 Framing At Roof Structure
1/2" = 1'-0"

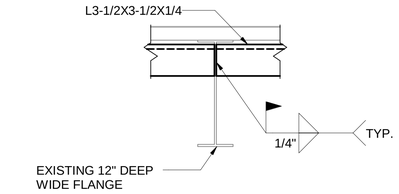


3 Framing Connection
1 1/2" = 1'-0"

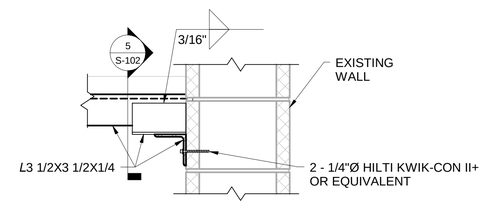


4 Framing Connection
1 1/2" = 1'-0"

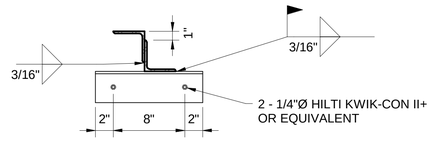


5 Framing Connection
1 1/2" = 1'-0"

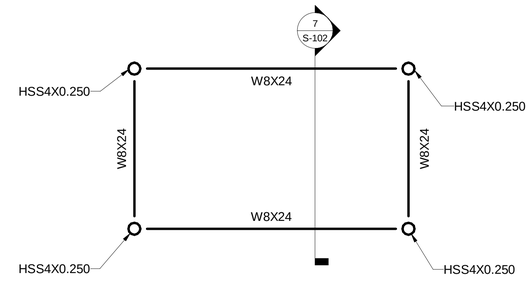


6 Framing Above Roof Membrane
1/2" = 1'-0"

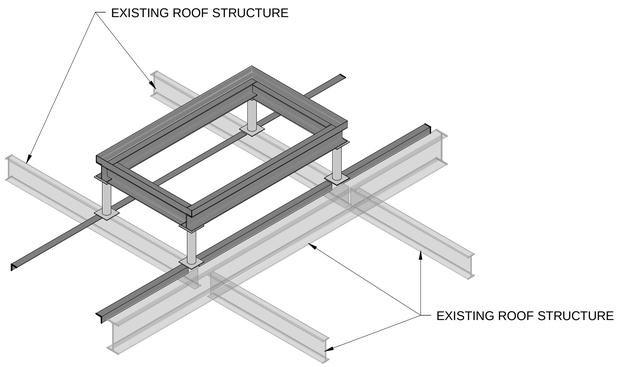


8 Proposed Roof Framing - Isometric

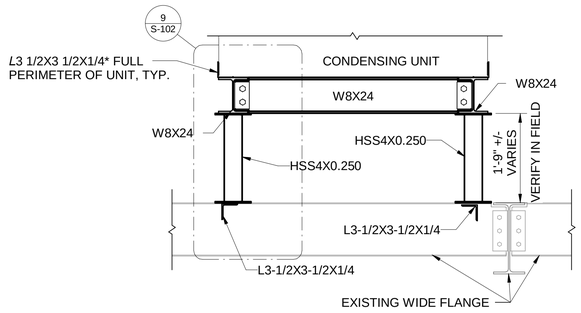


7 Condensing Unit Section
3/4" = 1'-0"

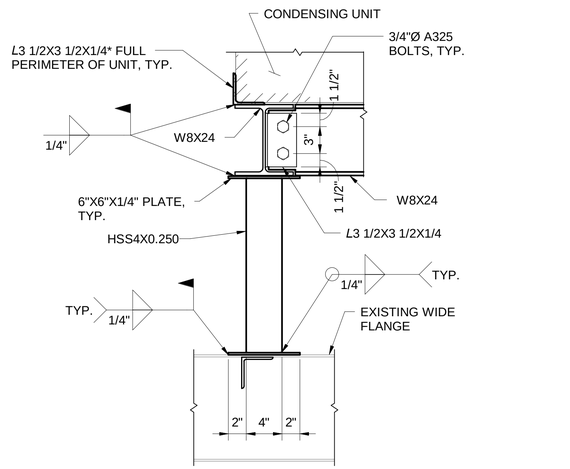


9 Section Detail
1 1/2" = 1'-0"

GENERAL NOTES:

1. REFER TO MECHANICAL DRAWINGS FOR MECHANICAL RTU AND OPENING LOCATIONS.
2. WHERE STEEL STRUCTURE IS EXPOSED TO THE WEATHER, STEEL SHALL BE HOT DIPPED GALVANIZED.
3. PERIMETER ANGLE SHALL BE LOCATED BASED ON THE RTU SELECTED BY CONTRACTOR.
4. RTU SHALL BE POSITIVELY CONNECTED TO STEEL FRAME.


HURST-ROSCHE, INC.
PROFESSIONAL DESIGN NUMBER: 184-000298

**1400 E. TREMONT STREET**
**HILLSBORO, IL**
**PH:217.532.3959**
www.hurst-rosche.com

**MARION, IL**
**EAST ST. LOUIS, IL**
**ARNOLD, MO**
**NEOSHO, MO**
**NASHVILLE, TN**


LICENSED STRUCTURAL ENGINEER
CHASE J. CONNOR
081-007200
HILLSBORO ILLINOIS
STATE OF ILLINOIS

SIGNATURE
DATE 03-18-2020
LICENSE EXPIRES 11-30-2020


WRF ENGINEERS, LLC
112 N. KANSAS STREET
EDWARDSVILLE, IL 62025
P: 618-659-8709
P: 618-656-8353


HVAC REPLACEMENT
HILLSBORO HIGH SCHOOL GYM BUILDING
HILLSBORO COMMUNITY SCHOOL DISTRICT No.3
HILLSBORO, MONTGOMERY COUNTY, ILLINOIS

| MARK | DATE | DESCRIPTION |
|---|---|---|
| | | |
| | | |
| | | |

DATE: 03-18-2020
PROJECT NO: 150-3209
DESIGN: CJC | DRAWN: NAL | CHECK: JJC

RTU SUPPORT DETAILS

S-102

© 2020 HURST-ROSCHE, INC.

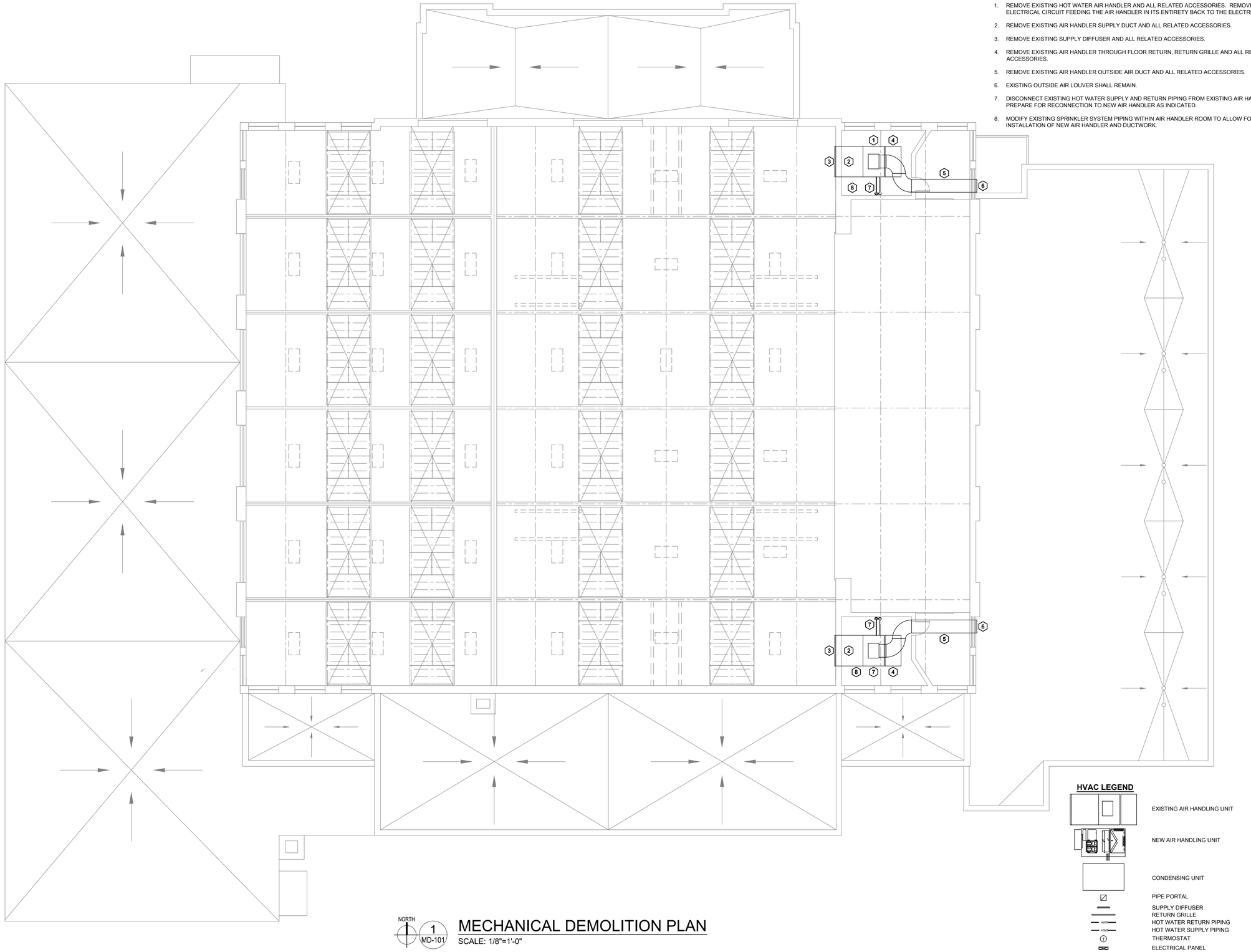


## HVAC DEMO KEYED "⬡" NOTES (THIS SHEET ONLY)

1. REMOVE EXISTING HOT WATER AIR HANDLER AND ALL RELATED ACCESSORIES. REMOVE EXISTING ELECTRICAL CIRCUIT FEEDING THE AIR HANDLER IN ITS ENTIRETY BACK TO THE ELECTRICAL PANEL.
2. REMOVE EXISTING AIR HANDLER SUPPLY DUCT AND ALL RELATED ACCESSORIES.
3. REMOVE EXISTING SUPPLY DIFFUSER AND ALL RELATED ACCESSORIES.
4. REMOVE EXISTING AIR HANDLER THROUGH FLOOR RETURN, RETURN GRILLE AND ALL RELATED ACCESSORIES.
5. REMOVE EXISTING AIR HANDLER OUTSIDE AIR DUCT AND ALL RELATED ACCESSORIES.
6. EXISTING OUTSIDE AIR LOUVER SHALL REMAIN.
7. DISCONNECT EXISTING HOT WATER SUPPLY AND RETURN PIPING FROM EXISTING AIR HANDLER AND PREPARE FOR RECONNECTION TO NEW AIR HANDLER AS INDICATED.
8. MODIFY EXISTING SPRINKLER SYSTEM PIPING WITHIN AIR HANDLER ROOM TO ALLOW FOR DEMOLITION AND INSTALLATION OF NEW AIR HANDLER AND DUCTWORK.

## HVAC LEGEND

- EXISTING AIR HANDLING UNIT
- NEW AIR HANDLING UNIT
- CONDENSING UNIT
- PIPE PORTAL
- SUPPLY DIFFUSER
- RETURN GRILLE
- HWR — HOT WATER RETURN PIPING
- HWS — HOT WATER SUPPLY PIPING
- T — THERMOSTAT
- ELECTRICAL PANEL

NORTH

1 / MD-101

## MECHANICAL DEMOLITION PLAN

SCALE: 1/8"=1'-0"


Hurst-Rosche, Inc.
PROFESSIONAL DESIGN NUMBER: 184-000298
1400 E. TREMONT STREET
HILLSBORO, IL
PH:217.532.3959

EAST ST. LOUIS, IL
MARION, IL
ARNOLD, MO
NEOSHO, MO
NASHVILLE, TN


MARK A. RITTER
062-057600
LICENSED PROFESSIONAL ENGINEER
ILLINOIS

SIGNATURE
03-18-2020
DATE
11-30-2021
LICENSE EXPIRES


WRFT ENGINEERS, LLC
112 N. KANSAS STREET
EDWARDSVILLE, IL 62025
P: 618-659-8709
P: 618-656-8353


HVAC REPLACEMENT
HILLSBORO HIGH SCHOOL - GYM BUILDING
HILLSBORO COMMUNITY SCHOOL DISTRICT No. 3
HILLSBORO, MONTGOMERY COUNTY, ILLINOIS

| MARK | DATE | DESCRIPTION |
|---|---|---|
| | | |
| | | |
| | | |

DATE: 03-18-2020
PROJECT NO: 150-3209

| DESIGN: | DRAWN: | CHECK: |
|---|---|---|
| MAR | QK | MAR |

MECHANICAL DEMOLITION PLAN

MD-101

© 2020 HURST-ROSCHE, INC.

## HVAC KEYED " ⬡ " NOTES (THIS SHEET ONLY)

1. PROVIDE AND INSTALL NEW AHU ON CONCRETE PAD OR 6" BASE RAIL. INSTALL AHU ON SPRING ISOLATORS, SEE SPECIFICATION SECTION 23 05 48.
2. PROVIDE AND INSTALL NEW 2" HWS AND 2" HWR TO NEW AHU. CONNECT TO EXISTING HWS AND HWR IN SPACE. SEE DETAIL 2/M-501.
3. PROVIDE AND INSTALL NEW RETURN AIR DUCT FROM AHU TO NEW 100"x100"x16" DEEP (MINIMUM) PLENUM RETURN BOX AS HIGH AS POSSIBLE. INSTALL TWO EACH RETURN GRILLES ON STAGE SIDE OF SPACE.
4. PROVIDE AND INSTALL NEW OUTSIDE AIR DUCT, APPROXIMATELY AS SHOWN. REUSE EXISTING DUCT AND EXTERIOR WALL PENETRATION/LOUVER.
5. PROVIDE AND INSTALL NEW SUPPLY DUCT FROM AHU, PROVIDE DUCT SIZE CONNECTIONS AND TRANSITION TO VERTICAL SUPPLY PLENUM BOX AS NOTED ON DETAIL 1/M-401.
6. ROUTE CONDENSATE FROM AHU TO EXTERIOR WALL JUST BELOW WINDOW AT OUTSIDE AIR LOUVER TO DUMP ONTO LOWER ROOF.
7. PROVIDE AND INSTALL NEW THERMOSTAT/SENSOR LOCATED AS DIRECTED BY THE ARCHITECT/ENGINEER. PROVIDE AND INSTALL PLASTIC LOCKABLE COVER, ALL COVERS KEYED ALIKE.
8. PROVIDE ELECTRICAL CONNECTIONS FOR AIR HANDLER. ROUTE 3-#3 AWG & #8 AWG GND IN A 1 1/4" EMT CONDUIT TO THE EXISTING ELECTRICAL PANEL TO BE PROVIDED BY OTHERS. CONNECT CIRCUIT TO THE NEW CIRCUIT BREAKER WITHIN THE ELECTRICAL PANEL.
9. NEW 208V, 400A, 3 PHASE ELECTRICAL PANEL AND ALL REQUIRED CIRCUIT BREAKERS TO BE PROVIDED BY OTHERS.
10. INSTALL NEW DUCT SMOKE DETECTOR IN RETURN DUCT OF AIR HANDLING UNIT. CONNECT TO THE EXISTING BUILDING FIRE ALARM SYSTEM AS REQUIRED FOR A COMPLETE FUNCTIONAL SYSTEM.

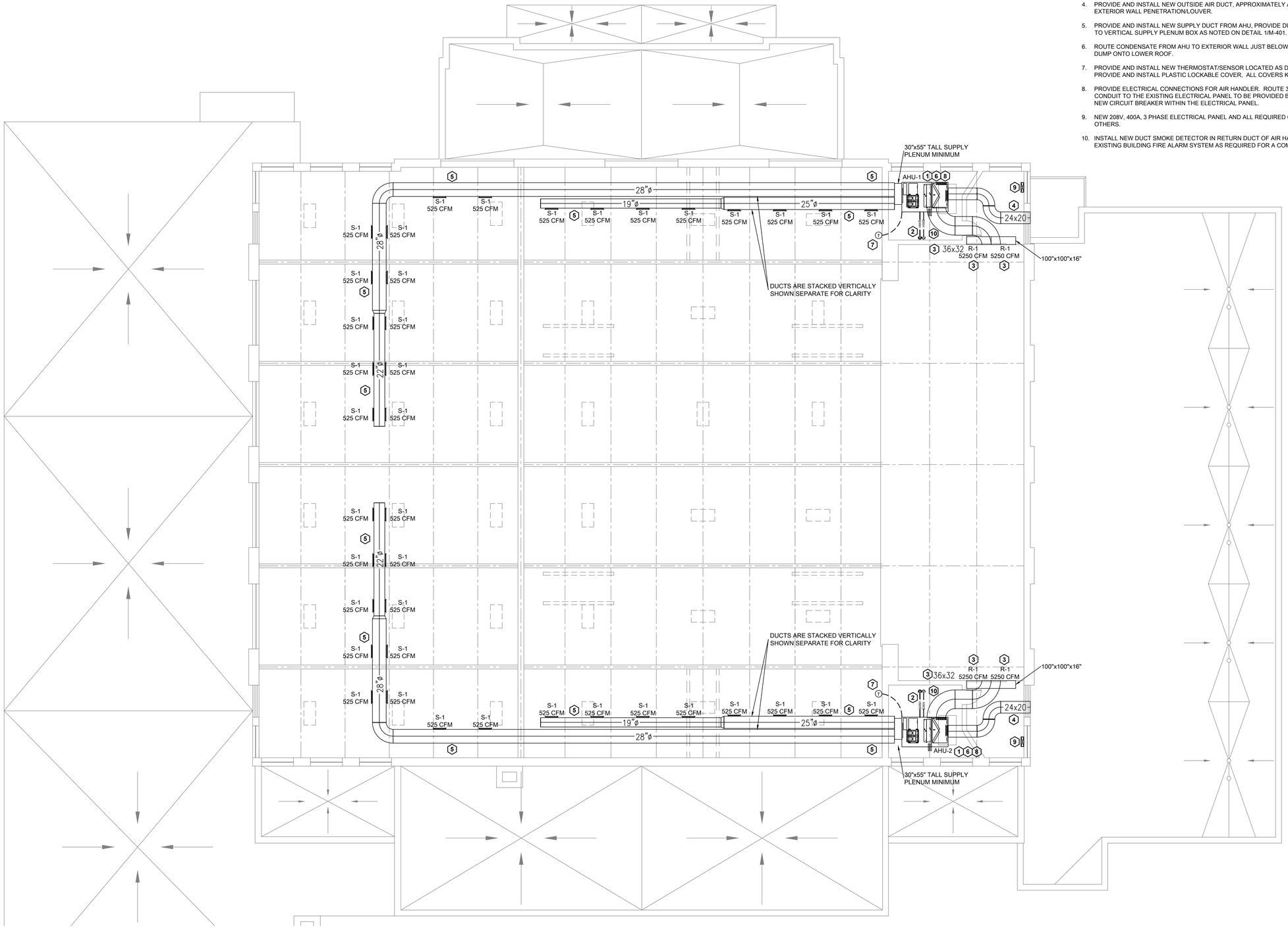


NORTH

1 / M-101

## MECHANICAL FLOOR PLAN

SCALE: 1/8"=1'-0"


Hurst-Rosche, Inc.
PROFESSIONAL DESIGN NUMBER: 184-000298
1400 E. TREMONT STREET
HILLSBORO, IL
PH:217.532.3959

EAST ST. LOUIS, IL
MARION, IL
ARNOLD, MO
NEOSHO, MO
NASHVILLE, TN


MARC A. RITTER
062-057600
LICENSED PROFESSIONAL ENGINEER
ILLINOIS

SIGNATURE
03-18-2020
DATE
11-30-2021
LICENSE EXPIRES


WRFT ENGINEERS, LLC
112 N. KANSAS STREET
EDWARDSVILLE, IL 62025
P: 618-659-8709
P: 618-656-8353


HVAC REPLACEMENT
HILLSBORO HIGH SCHOOL - GYM BUILDING
HILLSBORO COMMUNITY SCHOOL DISTRICT No. 3
HILLSBORO, MONTGOMERY COUNTY, ILLINOIS

| MARK | DATE | DESCRIPTION |
|---|---|---|
| | | |
| | | |
| | | |

DATE: 03-18-2020
PROJECT NO: 150-3209

| DESIGN: | DRAWN: | CHECK: |
|---|---|---|
| MAR | QK | MAR |

MECHANICAL FLOOR PLAN

M-101

© 2020 HURST-ROSCHE, INC.

## HVAC KEYED "⬡" NOTES (THIS SHEET ONLY)

1. PROVIDE AND INSTALL NEW CU ON ROOF RAILS AND VIBRATION ISOLATION SPRINGS. SEE DETAILS ON ARCHITECTURAL/STRUCTURAL SHEETS AND SPEC SECTION 23 05 48.
2. PROVIDE AND INSTALL NEW 12"x12" ROOF PIPING PORTAL FOR NEW REFRIGERANT LINES FROM AHU TO CU. SEE DETAILS ON ARCHITECTURAL/STRUCTURAL SHEETS.
3. ROUTE REFRIGERANT PIPING IN MOST DIRECT ROUTE BETWEEN AHU AND CU. INSTALL ACCESSORIES WITH CU. REFRIGERANT PIPING NOT SHOWN FOR CLARITY.
4. ALL OTHER HVAC/ROOF ELEMENT ITEMS ARE EXISTING AND TO REMAIN.
5. PROVIDE NEMA 3R DISCONNECT SWITCH AND ELECTRICAL CONNECTIONS FOR CONDENSING UNIT. ROUTE 3-2/0 AWG & #6 AWG GND IN A 2" EMT CONDUIT TO THE EXISTING ELECTRICAL PANEL TO BE PROVIDED BY OTHERS. CONNECT CIRCUIT TO THE NEW CIRCUIT BREAKER WITHIN THE ELECTRICAL PANEL.
6. REMOVE EXISTING GRAVITY VENT AND ALL RELATED ACCESSORIES - SEE ARCHITECTURAL SHEETS FOR ADDITIONAL INFORMATION.

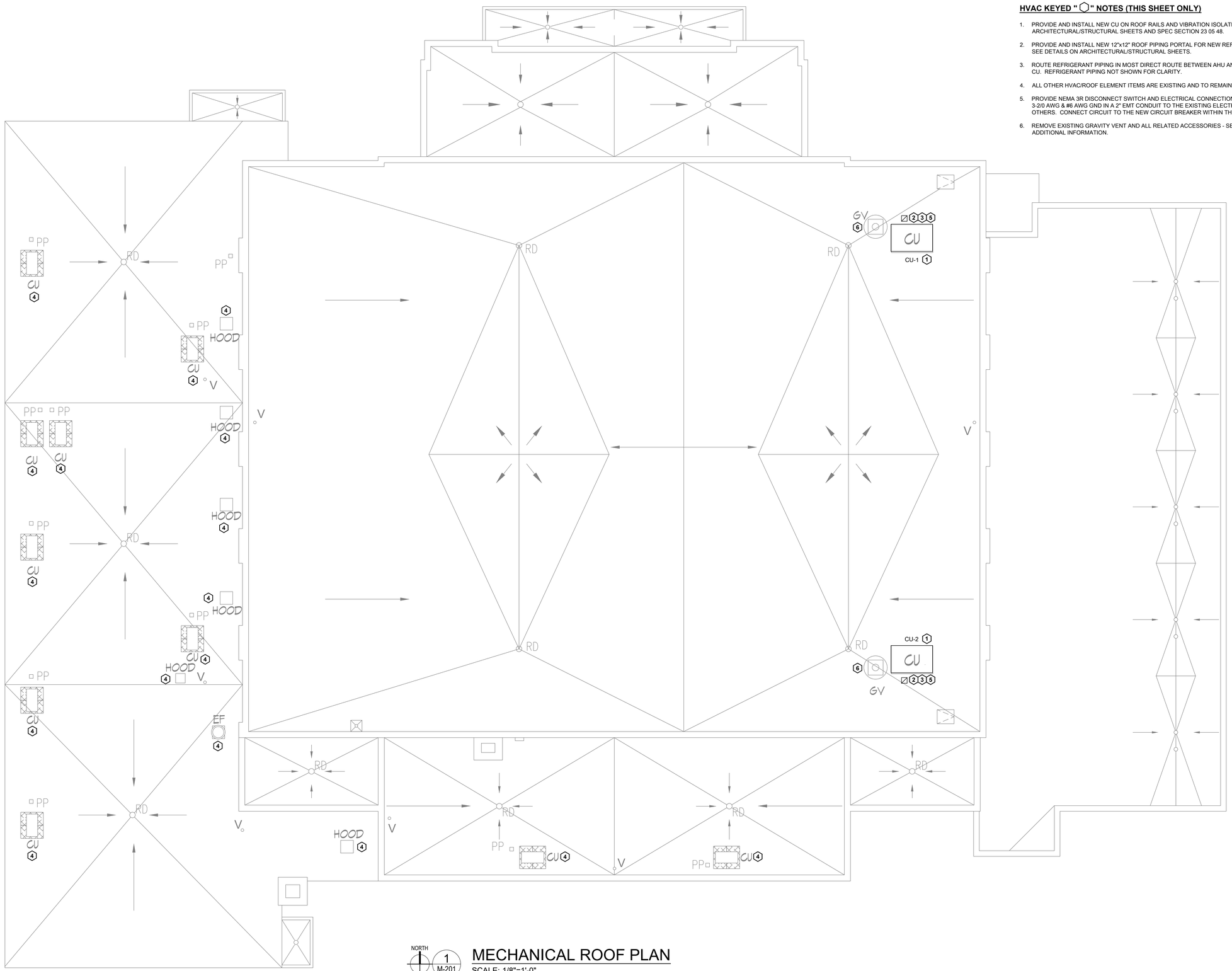


1 M-201 MECHANICAL ROOF PLAN
SCALE: 1/8"=1'-0"

Hurst-Rosche, Inc.
PROFESSIONAL DESIGN NUMBER: 184-000298
1400 E. TREMONT STREET
HILLSBORO, IL
PH:217.532.3959

EAST ST. LOUIS, IL
MARION, IL
ARNOLD, MO
NEOSHO, MO
NASHVILLE, TN

MARC A. RITTER
062-057600
LICENSED PROFESSIONAL ENGINEER
STATE OF ILLINOIS

SIGNATURE 03-18-2020
DATE 11-30-2021
LICENSE EXPIRES

WRFT ENGINEERS, LLC
112 N. KANSAS STREET
EDWARDSVILLE, IL 62025
P: 618-659-8709
P: 618-656-8353

HVAC REPLACEMENT
HILLSBORO HIGH SCHOOL - GYM BUILDING
HILLSBORO COMMUNITY SCHOOL DISTRICT No. 3
HILLSBORO, MONTGOMERY COUNTY, ILLINOIS

| MARK | DATE | DESCRIPTION |
|---|---|---|
| | | |
| | | |
| | | |

DATE: 03-18-2020
PROJECT NO: 150-3209

| DESIGN: | DRAWN: | CHECK: |
|---|---|---|
| MAR | QK | MAR |

MECHANICAL ROOF PLAN

M-201

© 2020 HURST-ROSCHE, INC.

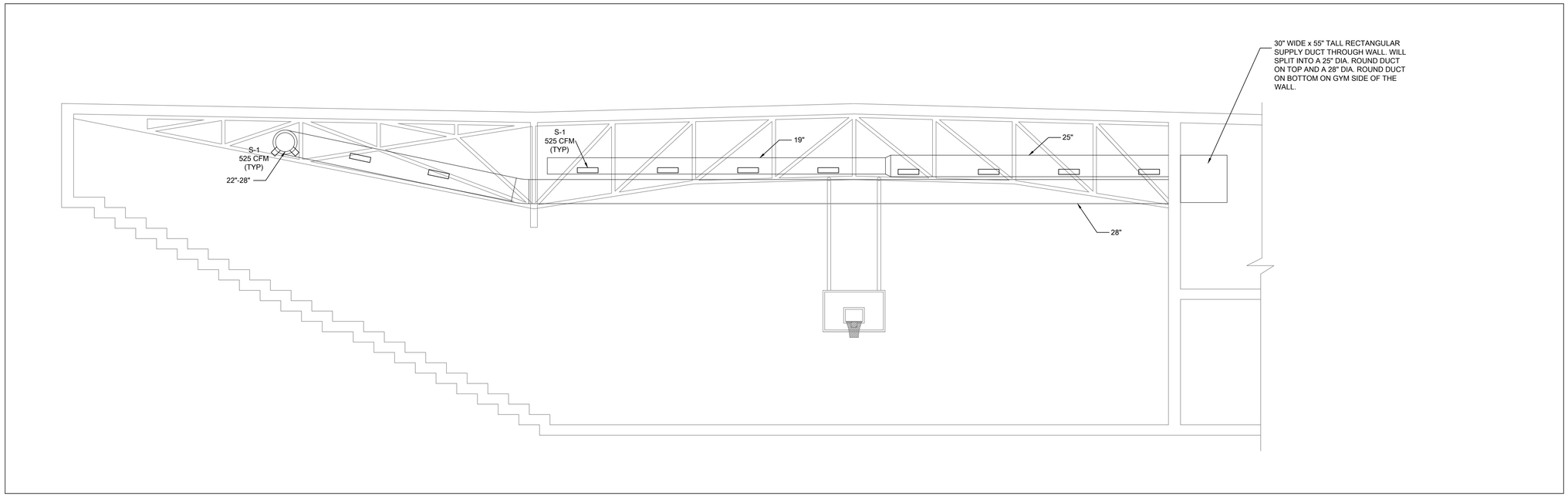


1
M-401

## GYM SECTION

SCALE: 3/16"=1'-0"


Hurst-Rosche, Inc.
PROFESSIONAL DESIGN NUMBER: 184-000298
1400 E. TREMONT STREET
HILLSBORO, IL
PH:217.532.3959

EAST ST. LOUIS, IL
MARION, IL
ARNOLD, MO
NEOSHO, MO
NASHVILLE, TN


MARC A. RITTER
062-057600
LICENSED PROFESSIONAL ENGINEER
ILLINOIS

SIGNATURE 03-18-2020
DATE 11-30-2021
LICENSE EXPIRES


WRFT
ENGINEERS, LLC
112 N. KANSAS STREET
EDWARDSVILLE, IL 62025
P: 618-659-8709
P: 618-656-8353


HVAC REPLACEMENT
HILLSBORO HIGH SCHOOL - GYM BUILDING
HILLSBORO COMMUNITY SCHOOL DISTRICT No. 3
HILLSBORO, MONTGOMERY COUNTY, ILLINOIS

| MARK | DATE | DESCRIPTION |
|---|---|---|
| | | |
| | | |
| | | |

DATE: 03-18-2020
PROJECT NO: 150-3209

| DESIGN: | DRAWN: | CHECK: |
|---|---|---|
| MAR | QK | MAR |

SECTION
THROUGH GYM

M-401

© 2020 HURST-ROSCHE, INC.

## GENERAL HVAC NOTES:

A. PROVIDE ALL MATERIALS AND EQUIPMENT AND PERFORM ALL LABOR REQUIRED TO INSTALL COMPLETE AND OPERABLE MECHANICAL SYSTEMS AS INDICATED ON THE DRAWINGS, AS SPECIFIED AND AS REQUIRED BY CODE.

B. CONTRACT DOCUMENT DRAWINGS FOR VENTILATION WORK ARE DIAGRAMMATIC AND ARE INTENDED TO CONVEY SCOPE AND GENERAL ARRANGEMENT ONLY.

C. INSTALL ALL MECHANICAL EQUIPMENT AND APPURTENANCES IN ACCORDANCE WITH MANUFACTURER'S RECOMMENDATIONS, CONTRACT DOCUMENTS AND APPLICABLE CODES AND REGULATIONS.

D. WHERE TWO OR MORE ITEMS OF THE SAME TYPE AND EQUIPMENT ARE REQUIRED, THE PRODUCT OF ONE MANUFACTURER SHALL BE USED.

E. LOCATE ALL MECHANICAL EQUIPMENT FOR UNOBSTRUCTED ACCESS TO UNIT ACCESS PANELS, CONTROLS, VALVING AND FACTORY RECOMMENDED CLEARANCES.

F. COORDINATE CONSTRUCTION OF ALL VENTILATION WORK WITH ARCHITECTURAL, STRUCTURAL AND ELECTRICAL WORK SHOWN ON OTHER CONTRACT DRAWINGS.

G. THE LOCATIONS OF ALL ITEMS SHOWN ON THE DRAWINGS OR CALLED FOR IN THE SPECIFICATIONS THAT ARE NOT DEFINITELY FIXED BY DIMENSIONS ARE APPROXIMATE ONLY. THE EXACT LOCATIONS NECESSARY TO SECURE THE BEST CONDITIONS AND RESULTS MUST BE DETERMINED BY THE PROJECT SITE CONDITIONS. DO NOT SCALE DRAWINGS.

H. LOCATIONS AND SIZES OF ALL FLOOR, WALL AND ROOF OPENINGS SHALL BE COORDINATED WITH ALL OTHER TRADES INVOLVED.

I. PROVIDE VIBRATION ISOLATORS FOR ALL PIPING SUPPORTS CONNECTED TO AND WITHIN 50 FEET OF ISOLATED EQUIPMENT. DO THE SAME FOR SUPPORTS OF STEAM MAINS.

J. MAINTAIN A MINIMUM OF 6'-8" CLEARANCE TO UNDERSIDE OF PIPES, CONDUITS, SUSPENDED EQUIPMENT, ETC. THROUGH ACCESS ROUTES IN MECHANICAL ROOMS.

K. COORDINATE EQUIPMENT LOCATIONS WITH ELECTRICAL WORK AND PLUMBING WORK. PROVIDE ADEQUATE ACCESS SPACE AROUND ABOVE-CEILING CONCEALED EQUIPMENT FOR MAINTENANCE.

L. SEAL ALL PENETRATIONS THROUGH NON-CONDITIONED SPACES WITH MEDIUM DENSITY OPEN CELL SPRAY FOAM.

M. ALL HVAC EQUIPMENT AND ASSOCIATED DISCONNECTS SHALL BE LABELED WITH THE EQUIPMENT NUMBER PERMANENTLY AFFIXED WITH AN ENGRAVED PLASTIC LABEL.

N. COORDINATE ALL EQUIPMENT CONNECTIONS WITH MANUFACTURERS CERTIFIED DRAWINGS. COORDINATE AND PROVIDE ALL DUCT AND PIPING TRANSITIONS REQUIRED FOR FINAL EQUIPMENT CONNECTIONS TO FURNISHED EQUIPMENT. FIELD VERIFY AND COORDINATE ALL DUCT AND PIPING DIMENSIONS BEFORE FABRICATION.

O. ALL MISCELLANEOUS STEEL REQUIRED TO ENSURE PROPER INSTALLATION AND AS SHOWN IN DETAILS FOR PIPING AND EQUIPMENT (UNLESS OTHERWISE NOTED) SHALL BE FURNISHED AND INSTALLED BY THE CONTRACTOR.

P. ALL EQUIPMENT AND PIPING, ETC., SHALL BE SUPPORTED AS DETAILED, SPECIFIED, AND REQUIRED TO PROVIDE A VIBRATION FREE ISOLATION.

Q. ALL PIPING AND EQUIPMENT SUPPORTED FROM STRUCTURAL STEEL SHALL BE COORDINATED WITH GENERAL WORK CONTRACTOR. ALL ATTACHMENTS TO STEEL BAR JOISTS, TRUSSES, OR JOIST GIRDERS SHALL BE AT PANEL POINTS. PROVIDE BEAM CLAMPS MEETING MSS STANDARDS. WELDING TO STRUCTURAL MEMBERS SHALL NOT BE PERMITTED. THE USE OF C-CLAMPS SHALL NOT BE PERMITTED.

R. REFER TO TYPICAL DETAILS FOR PIPING AND EQUIPMENT INSTALLATION.

S. ALL TESTS SHALL BE COMPLETED BEFORE ANY EQUIPMENT, DUCTWORK OR PIPING INSULATION IS APPLIED.

T. BALANCE AIR FLOW TO ALL NEW HVAC EQUIPMENT, AS SPECIFIED AND INDICATED ON PLANS.

U. WHEN VENTILATION WORK IS SUBCONTRACTED, IT SHALL BE THE CONTRACTOR'S RESPONSIBILITY TO COORDINATE SUBCONTRACTORS AND THE ASSOCIATED CONTRACTS.

V. MECHANICAL EQUIPMENT, DUCTWORK AND PIPING SHALL NOT BE SUPPORTED FROM METAL DECK.

W. CONTRACTOR MUST FIELD VERIFY ALL EXISTING DIMENSIONS.

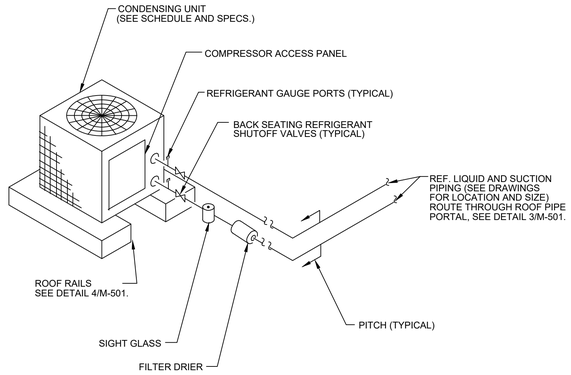


### 1 M-501 CONDENSING UNIT DETAIL
NO SCALE

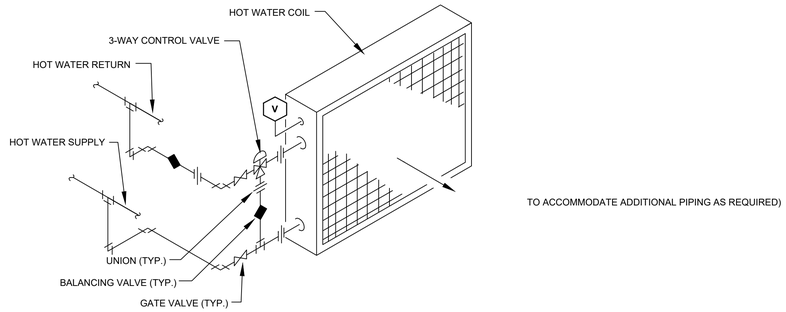


TO ACCOMMODATE ADDITIONAL PIPING AS REQUIRED)

### 2 M-501 HOT WATER COIL PIPING WITH 3-WAY VALVE
NO SCALE

## AIR HANDLING UNIT SCHEDULE

| MARK | MAKE & MODEL NUMBER | AIR FLOW | | DX COOLING COIL | | | | | HOT WATER HEATING COIL | | | | FAN DATA | | | ELECTRICAL POWER | | | | | FILTER DATA | UNIT DATA |
|---|---|---|---|---|---|---|---|---|---|---|---|---|---|---|---|---|---|---|---|---|---|---|
| | | SUPPLY AIR FLOW CFM | MINIMUM OUTSIDE AIR FLOW | TOTAL MBH | SENSIBLE MBH | ENT. OA TEMP °F DB/WB | AIR TEMP DEG. F DB/WB ENT. | AIR TEMP DEG. F DB/WB LVG. | HEATING CAPACITY MBH | AIR TEMP DEG. F ENT. | AIR TEMP DEG. F LVG. | GPM | APPROX. EXT. SP (IN W.C.) | RPM | APPROX. MOTOR HP | VOLT | PHASE | HZ | MOP | MCA | TYPE | WEIGHT LBS. |
| AHU-1 | TRANE UCCAG21A0E0EYA13000006FD8 | 10,500 | 3262 | 407.73 | 289.77 | 95/78 | 80/67 | 55/54 | 338.92 | 55 | 84.76 | 22.58 | 1.5" | 2306 | 7.5 | 208 | 3 | 60 | 110 | 69.5 | 2" PLEATED | 2526 |
| AHU-2 | TRANE UCCAG21A0E0EYA13000006FD8 | 10,500 | 3262 | 407.73 | 289.77 | 95/78 | 80/67 | 55/54 | 338.92 | 55 | 84.76 | 22.58 | 1.5" | 2306 | 7.5 | 208 | 3 | 60 | 110 | 69.5 | 2" PLEATED | 2526 |

NOTES:
1. HORIZONTAL UNIT CONFIGURATION; TOP OUTLET.
2. 2" ANGLE FILTER MIXING SECTION.
3. UNIT LENGTH DIMENSION NOT TO EXCEED 95".
4. UNIT HEIGHT DIMENSION NOT TO EXCEED 61".
5. UNIT WIDTH DIMENSION NOT TO EXCEED 79"
6. UNIT TO BE SECTIONAL TO FIT THROUGH STANDARD 30" WIDE DOOR.

## SCHEDULE OF AIR COOLED CONDENSING UNITS

SUMMER AMBIENT: 95°F AMB

| MARK | MANUFACTURER AND MODEL NO. | TOTAL MBH | REFRIGERANT | ELECTRICAL MCA | ELECTRICAL VOLT/PH | WEIGHT | REMARKS |
|---|---|---|---|---|---|---|---|
| CU-1 | TRANE RAUJ-30 | 393 | R-410A | 141 | 208/3 | 1936 | 1-4 |
| CU-2 | TRANE RAUJ-30 | 393 | R-410A | 141 | 208/3 | 1936 | 1-4 |

NOTES:
1. STANDARD AMBIENT CONTROL.
2. UNIT EER = 11.4.
3. UNIT INCLUDES NON-FUSED DISCONNECT SWITCH, LABELED WITH CIRCUIT BREAKER LOCATION.
4. UNIT INCLUDES HOT GAS BYPASS OR DEHUMIDIFICATION CONTROL OPTION.

## SCHEDULE OF GRILLES AND DIFFUSERS

| MARK | MANUFACTURER AND MODEL NO. | TYPE | MOUNT | NECK | MODULE | DAMPER | MATERIAL | FINISH | REMARKS |
|---|---|---|---|---|---|---|---|---|---|
| S-1 | KRUEGER DMGDR | DUCT MOUNTED SUPPLY GRILLE WITH RADIUS ENDS | DUCT | 8"X20" | 10"X22" | YES | ALUM. | PAINTABLE | 1 |
| R-1 | KRUEGER S80 | RETURN GRILLE WITH 3/4" BLADES FIXED HEAVY DUTY | DUCT | 48"X48" | 50"X50" | NO | STEEL | WHITE | 1 |

NOTES:
1. SEE DRAWINGS FOR LOCATION AND SIZES OF GRILLES.

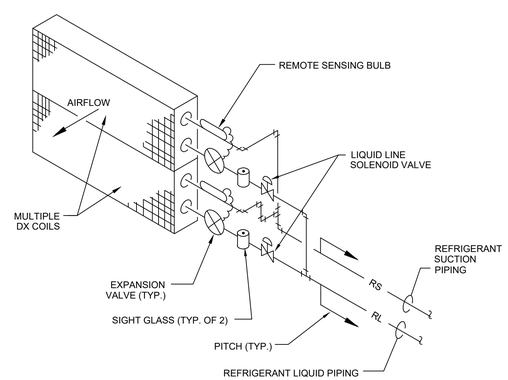


### 3 M-501 DX COIL PIPING DETAIL
NO SCALE

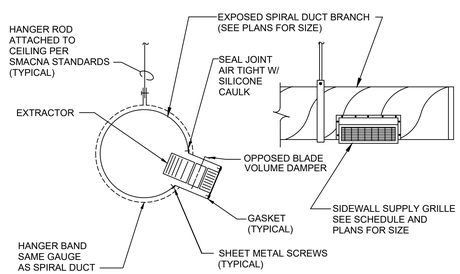


### 4 M-501 EXPOSED SPIRAL DUCT DETAIL (SINGLE SIDE)
NO SCALE

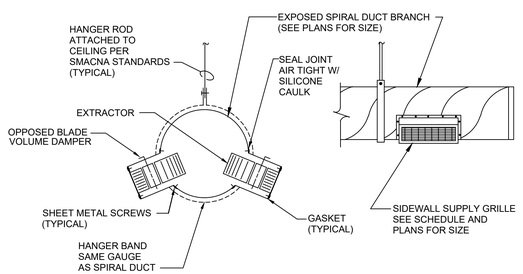


### 5 M-501 EXPOSED SPIRAL DUCT DETAIL (DOUBLE SIDE)
NO SCALE


Hurst-Rosche, Inc.
PROFESSIONAL DESIGN NUMBER: 184-000298
1400 E. TREMONT STREET
HILLSBORO, IL
PH:217.532.3959

EAST ST. LOUIS, IL
MARION, IL
ARNOLD, MO
NEOSHO, MO
NASHVILLE, TN


M. A. RITTER 062-057600 LICENSED PROFESSIONAL ENGINEER ILLINOIS

SIGNATURE 03-18-2020
DATE 11-30-2021
LICENSE EXPIRES


WRFT ENGINEERS, LLC
112 N. KANSAS STREET
EDWARDSVILLE, IL 62025
P: 618-659-8709
P: 618-656-8353


HVAC REPLACEMENT
HILLSBORO HIGH SCHOOL - GYM BUILDING
HILLSBORO COMMUNITY SCHOOL DISTRICT No. 3
HILLSBORO, MONTGOMERY COUNTY, ILLINOIS

| MARK | DATE | DESCRIPTION |
|---|---|---|
| | | |
| | | |
| | | |

DATE: 03-18-2020
PROJECT NO: 150-3209
DESIGN: MAR | DRAWN: QK | CHECK: MAR

HVAC SCHEDULES, NOTES & DETAILS

M-501

© 2020 HURST-ROSCHE, INC.