HURST-ROSCHE, INC.

PROJECT MANUAL FOR

REBID: CORRIDOR ADDITION
HILLSBORO JUNIOR HIGH SCHOOL
HILLSBORO C.U.S.D. NO. 3
HILLSBORO, MONTGOMERY COUNTY, ILLINOIS
HR # 150-0738

Prepared for

Hillsboro C.U.S.D. No. 3
1311 Vandalia Road
Hillsboro, Montgomery County, Illinois

JUNE 6, 2018

Bid Package No. _____

HURST – ROSCHE INC.
1400 E. Tremont Street Hillsboro, Illinois 62049 217 / 532-3959

DOCUMENT 000110 - TABLE OF CONTENTS

REBID: CORRIDOR ADDITION
HILLSBORO JUNIOR HIGH SCHOOL
HILLSBORO C.U.S.D. NO. 3
HILLSBORO, MONTGOMERY COUNTY, ILLINOIS
HR # 150-0738

FACILITY CONSTRUCTION SUBGROUP
DIVISION 02 - EXISTING CONDITIONS

DIVISION 03 - CONCRETE

DIVISION 04 - MASONRY

DIVISION 05 - METALS

DIVISION 06 - WOOD, PLASTICS, AND COMPOSITES

DIVISION 07 - THERMAL AND MOISTURE PROTECTION

DIVISION 08 - OPENINGS

DIVISION 09 - FINISHES

DIVISION 26 - ELECTRICAL

DIVISION 31 - EARTHWORK

DIVISION 32 - EXTERIOR IMPROVEMENTS

DIVISION 33 - UTILITIES

APPLICABLE IDOT HIGHWAY STANDARDS

664001-02	Chain Link Fence
602401-04	Precast Manhole Type A 4’ Diameter
602701-02	Manhole Steps
604001-04	Frame and Lids Type 1
604036-03	Grate Type 8

END OF SECTION

SPECIFIERS:

Timothy L. Downen, AIA 217.532.3959

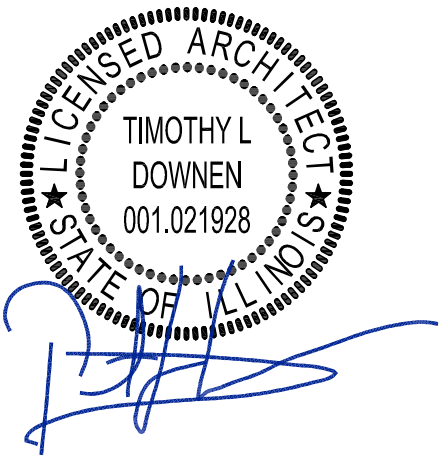

Chase J. Connor, PE, SE 217.532.3959

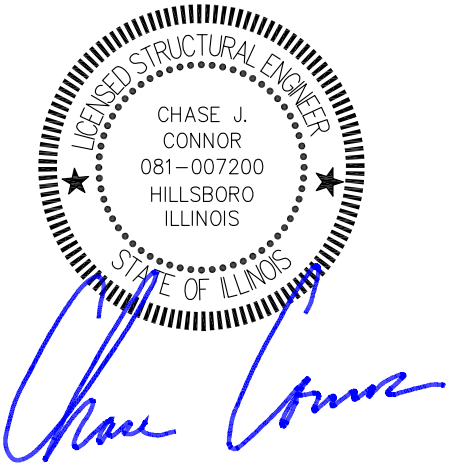

Garry Roscetti, PE 217.532.3959

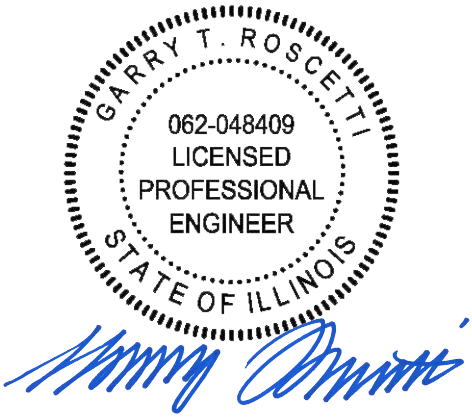

DOCUMENT 001116 - INVITATION TO BID

Project: **REBID: CORRIDOR ADDITION**
HILLSBORO JUNIOR HIGH SCHOOL
HILLSBORO C.U.S.D. NO. 3
HILLSBORO, MONTGOMERY COUNTY, ILLINOIS
HR # 150-0738

Owner: **HILLSBORO C.U.S.D. NO. 3**
1311 VANDALIA ROAD
HILLSBORO, ILLINOIS 62049

Architect/Engineer: **HURST-ROSCHE, INC.**
1400 E. TREMONT ST.
HILLSBORO, ILLINOIS 62049

Date: **June 6, 2018**

The Owner will receive Bids until 2:00 PM local prevailing time on Tuesday, the 19th day of June 2018, at Hillsboro C.U.S.D. No. 3 Unit Office, 1311 Vandalia Road, Hillsboro, Illinois for the following work:

Scope of Work:

Project consists of approximate 400 square foot corridor addition to connect two existing buildings at Hillsboro Junior High School. Building consists of concrete foundations, masonry walls, integrally colored concrete slab forming ADA compliant ramp, light gage metal joist and metal deck roof structure and membrane roofing. Finishes include painted concrete masonry unit walls, rubber base, vinyl tile and painted gypsum board ceilings. Civil, electrical and fire alarm scopes are commensurate with the work.

A MANDATORY Pre-bid Meeting will be held on Tuesday, the 12th day of June, 2018, at10:00 AM, prevailing time, at Hillsboro C.U.S.D. No. 3 Unit Office, 1311 Vandalia Road, Hillsboro, Illinois.

Drawings and specifications may be obtained at the office of Hurst-Rosche, Inc., 1400 E. Tremont St., Hillsboro, Illinois, on June 6, 2018, by paying a non-refundable amount of $90.00 ($100.00 if mailed) for each set of drawings and specifications.

Bidding Documents, Drawings and Specifications, may be examined by prospective bidders and material suppliers at the offices of Hurst-Rosche, Inc., 1400 E. Tremont St., Hillsboro, Illinois, and the following Plan Rooms:

Central Illinois Plan Room, 1620 S. 5th Street, Springfield, IL 62703
Greater Peoria Contractors & Suppliers Association, 1811 West Altorfer Drive, Peoria, IL 61615
McGraw Hill Construction, www.dodgeprojects.construction.com
Southern Illinois Builders Association, 1468 Green Mount Road, O'Fallon, IL 62269

Drawings and specifications will be available for viewing on the internet at: www.hurst-rosche.com. The documents are being provided for reference purposes only. Bidders are encouraged to obtain a signed and sealed hard copy set of the bidding documents. At a minimum, bidders must obtain clean copies of bid

forms from the offices of Hurst-Rosche Inc. by paying a non-refundable amount of $10.00 to submit a bid for this project.

The Owner requires the Junior High School addition to be substantially complete by September 21, 2018.

Bidders will be required to provide Bid security of a sum no less than 10 percent of the Bid Sum. The bid security shall be either certified check, cashier's check, bank money order or bid bond issued by surety licensed to conduct business in the State of Illinois. Hereinafter this bid security shall be referred to as the bid bond.

Submit two copies of your Bid on the Bid Form provided. Bidders may supplement this form as appropriate.

Your Bid will be required to be submitted under a condition of irrevocability for a period of 60 days after submission.

The Owner reserves the right to accept or reject any or all Bids or any part thereof, to waive any informality in bidding, and to accept bids deemed most favorable to the Owner.

HILLSBORO C.U.S.D. NO. 3

MR. DAVID POWELL, SUPERINTENDENT

END OF DOCUMENT

DOCUMENT 002114 - INSTRUCTIONS TO BIDDERS - AIA

1.1 SUMMARY

A. Document Includes:
   1. Instructions to Bidders.
   2. Site examination.
   3. Prebid conference.

B. Related Documents:
   1. Document 001116 - Invitation To Bid.
   2. Document 004113 - Bid Form - Stipulated Sum.
   3. Document 004300 - Procurement Form Supplements: Appendix A.
   4. Document 007214 - General Conditions – AIA Stipulated Sum.
   5. Document 007313 - Supplementary Conditions – AIA.

1.2 INSTRUCTIONS TO BIDDERS

A. These Instructions to Bidders amend or supplement AIA Document A701-1997 - Instructions to Bidders and other provisions of Bidding Documents and Contract Documents.

B. To be considered all bids must in accordance with these Instructions to Bidders.

C. Drawings and Bidders are encouraged to obtain a signed and sealed hard copy set of the bidding documents by paying a non-refundable amount of $90.00 ($100.00 if mailed). At a minimum, bidders must obtain clean copies of bid forms by paying a non-refundable amount of $10.00 to submit a bid for this project.

1.3 SITE EXAMINATION

A. Bidders shall carefully examine documents and construction site to obtain first-hand knowledge of existing conditions. Contractors will not be given extra payments for conditions which can be determined by examining site and these documents.

B. Contact Mr. Fred Butler at the following phone number to arrange date and time to visit Project site:
   1. Telephone: (217) 254-8723.

C. A visit to Project site has been arranged for Bidders following the Mandatory Pre-Bid Meeting at 10:00 AM on June 12, 2018.

1.4 THE SCHEDULE FOR BIDDING THIS PROJECT IS AS FOLLOWS

A.	**Plans Available:**	**June 6, 2018**
B.	**MANDATORY Pre-Bid Meeting:**	**June 12, 2018** **10:00 AM** **1311 Vandalia Rd.** **Hillsboro, IL 62049**
C.	**Latest Time to Submit Request for Interpretation:**	**June 13, 2018 @ 4:30 PM**
D.	**Latest Time to Issue an Addendum:**	**June 14, 2018 @ 4:30 PM**
E.	**Bid Opening**	**June 19, 2018** **2:00 PM** **1311 Vandalia Rd.** **Hillsboro, IL 62049**

F. All requests for interpretations shall be in writing via mail or e-mail addressed to the Architect/Engineer and must be received six (6) calendar days prior to date fixed for opening of bids in order to be given consideration. All questions must be submitted on the "Request for Interpretation Pre-Bid Question and Comment Form" included at the end of this section, and questions not submitted in accordance with this form and specified time frame will not be accepted. Any and all interpretations and supplemental instructions will be made by addendum to the Drawings and Specifications and forwarded to all bidders either by mail or e-mail transmittal. All responses by the Architect/Engineer must be in writing to be binding. Any response general in nature or affecting these Instructions to Bidders shall be sent via addendum as previously described. All bidders are required to return the signature page of the addendum signed to the Architect within 24 hours after receipt. Failure of any bidder to receive any such addendum or interpretations shall not relieve such bidder from an obligation under the bid as submitted. All addenda so issued shall become part of the Contract Documents. No addendum will be issued later than five (5) calendar days prior to bid date except one withdrawing the request for Bids or one postponing date for receiving Bids. Oral interpretations, changes or corrections will not be binding and Bidders shall not rely upon such interpretations, changes and corrections. Each Bidder shall ascertain prior to submitting Bid that all addenda issued have been received and shall acknowledge receipt in Bid.

Questions shall be directed to:
e-mail: tdownen@hurst-rosche.com

G. Materials, products and equipment described in Bidding Documents establish a standard of required function, dimension, appearance and quality to be met by any proposed substitution. No substitution will be considered prior to receipt of Bids unless written request for approval has been received by the Architect at least ten days prior to the date for receipt of Bids. Each such request shall include name of material or equipment for which it is to be substituted and a complete description of the proposed substitute

including drawings, cuts, performance and test data and any other information necessary for an evaluation. A statement setting forth any changes in other materials, equipment or other work that incorporation of the substitute would require shall be included. The burden of proof of the merit of proposed substitute is upon the proposer. Architect's decision of approval or disapproval of a proposed substitution shall be final. If the Architect approves any proposed substitution prior to receipt of Bids, such approval will be set forth in an addendum. Bidders shall not rely upon approvals made in any other manner. No substitutions will be considered after the contract award unless specifically provided in the Contract Documents.

H. Bids shall be made on unaltered Bid Forms furnished by the Architect. Fill in all blank spaces and submit two (2) copies. Bids shall be signed with name typed below signature. Where bidder is a corporation, bids must be signed with legal name of corporation followed by name of state of incorporation and legal signature of an officer authorized to bind the corporation to a contract.

I. Each bidder submitting a bid shall submit on form provided a list of any subcontractors and major suppliers he proposes to use with the bid. Failure to do so could disqualify the bid.

J. Each bidder shall designate on the attached bid form one person who shall serve as the bidder's contact person for all matters pertaining to the bid. In absence of such designation, the person who signs the bid shall be deemed the bidder contact.

K. For those projects which are bid on a unit price basis, in the event in which a bidder does not fill out the extension of the unit price, or a math error has occurred in calculation, the unit prices listed shall govern.

L. Each bid shall be accompanied by bid bond made payable to the Owner, in the amount of ten percent (10%) of the bid sum. Security shall be either certified check, cashier's check, bank money order or bid bond issued by surety licensed to conduct business in the State of Illinois. Successful bidder's security will be retained until he has signed the contract and furnished required payment and performance bonds. Owner reserves the right to retain security of the next two (2) lowest bidders until the lowest bidder enters into contract or until thirty (30) days after bid opening, whichever is shorter. All other bid security will be returned as soon as practicable. If any bidder refuses to enter into a contract, Owner will retain bid security as liquidated damages, but not as a penalty.

M. All costs associated with the preparation and submission of a bid are the sole responsibility of the bidder. These costs shall not be chargeable to the Owner by any successful or unsuccessful bidder. All bids become the property of the Owner and shall not be returned except in the case of a late submission.

N. Simultaneously, with delivery of the executed contract, the successful bidder, at its own expense, shall furnish surety in the form of a performance bond and a labor and material payment bond in the amount of one hundred percent (100%) of the contract amount. Surety for such bonds shall be a company duly authorized and licensed in the State of Illinois and acceptable to the Owner. The Attorney-In-Fact who signs bid bonds or

contract bonds must file with each bond a certified and effectively dated copy of their power of attorney.

O. All copies of the bid, bid security and any other documents required to be submitted with bid shall be enclosed in a sealed opaque envelope. Envelope shall be addressed to **Hillsboro C.U.S.D. No. 3, Unit Office, 1311 Vandalia Rd., Hillsboro, Illinois 62049**, and shall be identified with project name, bidder's name and address. Mailed bid envelopes shall be enclosed in a separate mailing envelope with the notation "SEALED BID ENCLOSED" on the face thereof. Oral, telephonic or telegraphic Bids are invalid and will not receive consideration. Bids shall be deposited at the location designated in the Invitation to Bid prior to time and date designated for opening, or any extension thereof made by addendum. Bidder shall assume full responsibility for timely delivery at location designated for receipt of Bids. Bids received after time and date for receipt of bids will be returned unopened.

P. A bid may not be modified, withdrawn or canceled during the thirty (30) days immediately following bid opening, and each bidder so agrees in submitting his Bid. Any bidder may withdraw, cancel or modify its bid, at any time prior to scheduled time for opening of bids, by letter or telegram actually received by Owner prior to bid time, or, with proper identification, by personally securing bid submitted; if by telegram, written confirmation over signature of bidder shall be mailed and postmarked on or before date and time of bid opening. Withdrawn bids may be resubmitted up to bid opening time provided that they are in full compliance with these Instructions to Bidders.

Q. Protests

1. Any bidder who submitted a bid and believes the bid was improperly rejected or that the bid selected by the Owner is not in the best interest of the Owner may submit a written notice of intent to protest the bid to the Owner within seven (7) days. The Owner shall consider all protests before execution of a contract. Each protest must specify the reasons supporting the protest. The Owner may require that additional information be provided. Failure to supply such required information shall be cause for dismissal of the protest.
2. The Owner shall immediately investigate the allegations against the Owners actions and shall issue a written response to the protest.
3. This provision allowing for the submission of protest shall not confer any right on any bidder but is intended solely to assist the Owner in determining the best responsible bid.

R. Any complaint or protest of the bidding procedure must be filed by the bidder to the Owner. Within 7 days of bid opening the bidder shall notify the Owner in writing of his intent to protest bidding. The bidder shall perfect this notice of intent within 7 days.

S. Owner reserves right to disqualify bids and bidders, before or after opening, upon evidence of collusion with intent to defraud or other illegal practices upon part of bidder, lack of responsibility as evidenced by poor workmanship and progress of past work, incomplete work which, in judgment of Owner, might hinder or prevent prompt completion of additional work if awarded, for being in arrears on existing contracts, in litigation with the Owner, or having defaulted on a previous contract.

T. Bidder's attention is directed to the fact that all Federal and Illinois State Laws, municipal ordinances and regulations of any and all authority having jurisdiction over construction of the project shall apply to the contract throughout, and they will be deemed to be included in the contract the same as though herein written out in full. Successful Bidders shall be required to comply with 775 ILCS 10 concerning equal employment opportunities; comply with 30 ILCS 570 concerning the employment of citizens of the State of Illinois; comply with 820 ILCS 265 concerning substance abuse prevention on public works projects; and comply with 820 ILCS 130 concerning prevailing wages.

U. Any successful bidder that is a corporation organized in a state other than Illinois shall furnish to the Owner, upon request, a properly certified copy of its current Certificate of Authority to do business in the State of Illinois, such certificate is to remain on file with the Owner.

V. Any successful bidder that is a corporation organized in the State of Illinois shall furnish at its own cost to the Owner, if requested, a Certificate of Good Standing issued by the Secretary of State, such certificate is to remain on file with the Owner.

W. Owner is exempt from payment of Federal & Illinois Department of Revenue's Use and Sales Tax on material entering permanently into structure. Retail sales tax shall not be included in the bid amount.

X. Bids will be opened as announced in Invitation for Bids.

Y. Owner reserves the right to reject any or all bids or any part thereof, to waive any informalities in bidding and to accept bids deemed most favorable to the Owner.

Z. Notwithstanding any delay in preparation and execution of the formal Contract Agreement, each bidder shall be prepared, upon written notice of bid acceptance, to commence work within ten (10) days following receipt of official written Notice to Proceed, or on date stipulated in such notice.

AA. Any work in providing or preparing to provide the services specified herein that is commenced by the successful bidder prior to execution of a written contract agreement shall be at the bidder’s expense.

BB. Accepted bidder shall assist and cooperate with the Owner in preparing the formal Contract Agreement, and, within fifteen (15) days following its presentation, shall execute same and return it to Owner.

CC. The Owner requires the Junior High School addition to be substantially complete by September 21, 2018.

1.5 REQUIRED CONTRACTOR/SUBCONTRACTOR BACKGROUND SCREENING

A. Hillsboro C.U.S.D. No. 3 requires background screening to be completed on all contractor/subcontractor employees. All employees must have documentation that a background screening has been completed on them prior to working on any district projects. All costs associated with the background screening are to be the responsibility

of the contractor. The background screening must be conducted by a company acceptable to the Hillsboro C.U.S.D. No. 3

B. All contractor/subcontractor employees working on the school grounds of Hillsboro C.U.S.D. No. 3 are required to submit to background screening. Each employee must complete, sign, and date the Consent and Waiver Release form. These forms will be submitted and the applicant cleared before the applicant may work on any part of the school grounds.

C. The contractor is responsible for submitting the forms to a company acceptable to the Hillsboro C.U.S.D. No. 3, and for any costs involved in the screening. All information received as a result of a background check will be strictly confidential. A notice of automatic disqualification will be sent to the hiring or using entity. After the screenings, the contractor is also responsible for sending Hillsboro C.U.S.D. No. 3 copies of approved background checks for their records.

END OF DOCUMENT

Hurst-Rosche, Inc. E-Mail: tdownen@hurst-rosche.com

REQUEST FOR INTERPRETATION PRE-BID QUESTION AND COMMENT FORM

(All information entered shall be typed in black).

PROJECT NAME: REBID: CORRIDOR ADDITION, HILLSBORO JUNIOR HIGH SCHOOL, HILLSBORO C.U.S.D. NO. 3, HILLSBORO, MONTGOMERY COUNTY, IL

BIDDER: SUBMITTED BY (Name): Date:

ADDRESS: CITY: STATE: PHONE: Sheet of

Question No.	Page (or Drawing Sheet) Number	Drawing No. or Spec. Section Article & Paragraph Number	Question by Bidder

NOTE: ***ANY AND ALL QUESTIONS PERTAINING TO THIS BID MUST BE TYPED AND SUBMITTED ON THIS FORM AND MAILED OR E-MAILED TO RECEIVE A RESPONSE.***

END OF SECTION 002114.

DOCUMENT 004113 - BID FORM - STIPULATED SUM

To: **HILLSBORO C.U.S.D. NO. 3**
1311 VANDALIA ROAD
HILLSBORO, ILLINOIS 62049

Project: **REBID: CORRIDOR ADDITION**
HILLSBORO JUNIOR HIGH SCHOOL
HILLSBORO C.U.S.D. NO. 3
HILLSBORO, MONTGOMERY COUNTY, ILLINOIS
HR # 150-0738

Date: _____

Submitted by: _____
(full name)

(full address) _____
_____
_____

Contact Name: _____

1. OFFER

Having examined the Place of The Work and all matters referred to in the Instructions to Bidders and the Contract Documents prepared by Hurst-Rosche, Inc. for the above mentioned project, we, the undersigned, hereby offer to enter into a Contract to perform the Work for the Sum of _____ dollars, ($_____), in lawful money of the United States of America.

We have included the security Bid Bond as required by the Instruction to Bidders.

All applicable federal taxes are excluded and State of Illinois and City of Hillsboro taxes are excluded from the Bid Sum.

2. REVIEW OF BID DOCUMENTS

The bidder represents that he is skilled and experienced in the use and interpretation of drawings and specifications such as those included in the bid documents for this contract. He has carefully reviewed the drawings, specifications and other bid documents, and has found them free of ambiguities and sufficient for bid purposes. Further, the Bidder has carefully examined the site of the work and, from his own observations, has satisfied himself as to the nature and location of the work; the character, quality and quantity of materials; the difficulties likely to be encountered; and any other items which may affect the performance of the Work. He has based his bid solely on these documents and observations, and has not relied in any way on any explanation or interpretation, oral or written, from any other source.

3. CONTRACTOR'S FEE FOR CHANGES IN WORK

Undersigned herein indicates a single percentage, not to exceed 12% for own forces and not to exceed 8% for subcontractors, for overhead and profit to be added to net extra job cost for changes in the work required to be performed by:

a) Own Forces ____% b) Subcontractors ____%

Undersigned herein indicates a single percentage, not less than 10% for own forces and not less than 5% for subcontractors, for overhead and profit to be added to net credit for job costs for changes in the work required to be performed by:

a) Own Forces ____% b) Subcontractors ____%

Percentages named above shall not include any items of insurance, bond or taxes since these are considered job cost items in contractor's quotations for changes in the work.

Any percentages indicated which are higher or lower than the maximum or minimum in the typewritten language herewith, shall be disregarded and typewritten figure used.

4. CONTRACT TIME

Undersigned agrees that, if awarded the Contract for Work bid upon herein, work will start on date designated in a written Notice to Proceed order issued by the Architect and will be completed in accordance with the contract documents, with all phases of work completed and operational and ready for acceptance by the Owner no later than as required by the Contract Agreement.

5. ADDENDA

The following Addenda have been received. The modifications to the Bid Documents noted below have been considered and all costs are included in the Bid Sum.

Addendum # _____ Dated _____; Addendum # _____ Dated _____
Addendum # _____ Dated _____; Addendum # _____ Dated _____

6. APPENDICES

The following documents are attached to and made a condition of the Bid:

Bid Bond in form of .....
Document 004300 - Procurement Form Supplements including:
Appendix A - List of Subcontractors.

7. EQUAL EMPLOYMENT OPPORTUNITY

During performance of this contract, Contractor agrees as follows:

a. The contractor will not discriminate against any employee or applicant for employment because of race, color, religion, sex, or national origin. The contractor will take affirmative action to ensure that applicants are employed, and that employees are treated during employment, without regard to their race, color, religion, sex or national origin. Such action shall include, but not be limited to, the following: Employment, upgrading, demotion, or transfer, recruitment or recruitment advertising; layoff or termination; rates of pay or other forms of compensation; and selection for training, including apprenticeship. The contractor agrees to post in conspicuous places, available to employees and applicants for employment, notices to be provided by the contracting officer setting forth the provisions of this nondiscrimination clause.

b. The contractor will in all solicitations or advertisements for employees placed by or on behalf of the contractor, state that all qualified applicants will receive consideration for employment without regard to race, color, religion, sex or national origin.

c. The contractor will send to each labor union or representative of workers with which he has a collective bargaining agreement or other contract of understanding, notice advising the labor union or worker's representative of the contractor's commitments under Section 202 of Executive Order 11246 of September 24, 1965, and shall post copies of the notice in conspicuous places available to employees and applicants for employment.

d. The contractor will comply with all provisions of Executive Order 11246 of September 24, 1965, and by the rules, regulations, and relevant orders of the Secretary of Labor.

e. The contractor will furnish all information and reports required by Executive Order 11246 of September 24, 1965, and by the rules, regulations, and order of the Secretary of Labor pursuant thereto, and will permit access to his books, records and accounts by the Department of the Secretary of Labor for purposes of investigation to ascertain compliance with such rules, regulations and orders.

f. In the event of the contractor's non-compliance with the nondiscrimination clauses of this contract or with any such rules, regulations or orders, this contract may be canceled, terminated or suspended in whole or in part and the contractor may be declared ineligible for further Government contracts in accordance with procedures authorized in Executive Order 11246 of September 24, 1965, and such other sanctions may be imposed and remedies involved as provided in Executive Order 11246 of September 24, 1965, or by rule, regulation or order of the Secretary of Labor, or as otherwise provided by law.

g. The contractor will include the provisions of paragraphs (1) through (7) in every subcontract or purchase order unless exempted by rules, regulations or orders of the Secretary of Labor issued pursuant to Section 204 of Executive Order 11246 of September 24, 1965, so that such provisions will be binding upon each subcontractor or vendor. The contractor will take such action with respect to any subcontract or purchase order as the Department may direct as a means of enforcing such provisions including

sanctions for noncompliance: Provided, however, that in the event the contractor becomes involved in, or is threatened with, litigation with the subcontractor or vendor as a result of such direction by the Department, the contractor may request the United States to enter into such litigation to protect the interest of the United States.

8. NOT BARRED

The contractor by submitting its bid certifies that the Contractor is not barred from bidding on the contract as a result of a conviction for either bid-rigging or bid-rotating. 720 ILCS 5/33/E-11.

9. DRUG FREE WORKPLACE

The Contractor by submitting its bid certifies that it will provide a drug free workplace and that it is in compliance with the requirements of the Drug Free Workplace Act 30 ILCS 580.1 et. seq., and the Substance Abuse Prevention on Public Works Projects Act PA095-0635.

10. SEXUAL HARASSMENT POLICY

The Contractor by submitting its bid certifies that it has a written sexual harassment, (ii) a description of sexual harassment, utilizing examples; (iv) an internal complaint process including penalties (v) the legal resource, investigative and compliant process through the Illinois Department of Human Rights: (vi) directions on how to contact the Department and Commission; and (vii) protection against retaliation for exercising rights under the policy in accordance with 775 ILCS 5/2-105(A)(4).

11. CRIMINAL RECORDS CHECKS

The Contractor by submitting its bid certifies that it will submit to background screening those employees, including subcontract employees, which will be working on any district project. This information is to be provided in accordance with the requirements of 105 ILCS 5/10-21.9. The Contractor by submitting its bid understands that employees found to be in violation of the Illinois School Code will not be permitted to work on school grounds.

12. BID FORM SIGNATURES

The Corporate Seal of

_____
(Bidder - print the full name of your firm)
was hereunto affixed in the presence of:

_____
(Authorized signing officer Title)

(Seal)

_____
(Authorized signing officer Title)

(Seal)

If the Bid is a joint venture or partnership, add additional forms of execution for each member of the joint venture in the appropriate form or forms as above.

END OF DOCUMENT

DOCUMENT 004300 - PROCUREMENT FORM SUPPLEMENTS

To: **HILLSBORO C.U.S.D. NO. 3**
1311 VANDALIA ROAD
HILLSBORO, ILLINOIS 62049

Project: **REBID: CORRIDOR ADDITION**
HILLSBORO JUNIOR HIGH SCHOOL
HILLSBORO C.U.S.D. NO. 3
HILLSBORO, MONTGOMERY COUNTY, ILLINOIS
HR # 150-0738

Date: _____

Submitted by: _____
(full name)

(full address) _____
_____
_____

Contact Name: _____

In accordance with Document 002114 - Instructions to Bidders - AIA and Document 004113 - Bid Form - Stipulated Sum, we include the Appendices to Bid Form Supplements listed below. The information provided shall be considered an integral part of the Bid Form.

The following Appendices are attached to this document:

Appendix A - List of Subcontractors: Include names of all Subcontractors and portions of the Work each Subcontractor will perform.

BID FORM SUPPLEMENTS SIGNATURES

The Corporate Seal of

_____
(Bidder - print the full name of your firm)

was hereunto affixed in the presence of:

_____
(Authorized signing officer Title)

(Seal)

_____
(Authorized signing officer Title)
(Seal)

APPENDIX A - LIST OF SUBCONTRACTORS

Herewith is the list of subcontractors referenced in the bid submitted by:

(Bidder) _____

To (Owner) HILLSBORO C.U.S.D. NO. 3

Dated _____ and which is an integral part of the Bid Form.

The following work will be performed (or provided) by subcontractors and coordinated by us:

WORK SUBJECT	NAME
SITE UTILITIES	
MECHANICAL	
ELECTRICAL	
FIRE ALARM	
DOORS FRAMES AND HARDWARE	
CONCRETE	
FLOORING	
GLAZING	
PAINTING	
MASONRY	
ROOFING	
CEILINGS	

END OF DOCUMENT

DOCUMENT 005214 - AGREEMENT FORM - AIA

1.1 SUMMARY

A. Document Includes:
1. Contract Agreement.

B. Related Documents:
1. Document 007214 - General Conditions – AIA Stipulated Sum.
2. Document 007313 - Supplementary Conditions - AIA.

1.2 CONTRACT AGREEMENT BETWEEN OWNER AND CONTRACTOR

A. THIS AGREEMENT, made and entered into as of the _____ day of _____ in the year of Two Thousand and _____by and between _____ hereinafter and in the Contract Documents called "Contractor" and the **HILLSBORO C.U.S.D. NO. 3**, hereinafter and in the Contract Documents called "Owner."

B. WITNESSETH: That for and in consideration of the mutual covenants and agreements, hereinafter stated, Contractor and Owner covenant and agree as follows:

C. THE CONTRACT WORK:

1. Contractor covenants and agrees to furnish all labor, materials, equipment, transportation, construction plant and facilities necessary to perform all Work required by the Contract Documents, for the Project entitled:

a. REBID: CORRIDOR ADDITION
HILLSBORO JUNIOR HIGH SCHOOL
HILLSBORO C.U.S.D. NO. 3
HILLSBORO, MONTGOMERY COUNTY, ILLINOIS

as shown on Drawings and described in Specifications prepared by Hurst-Rosche, Inc., Hillsboro, Illinois, acting as, and in these Contract Documents referred to as Architect/Engineer and covenants and agrees to do and perform all acts and things required of Contractor by this Contract and the Contract Documents.

D. TIME OF COMPLETION:

1. The Owner requires the Junior High School addition to be substantially complete by September 21, 2018.

E. CONTRACT SUM AND TERMS OF PAYMENT:

1. Contract Sum: The Owner, if Contractor shall faithfully fulfill and perform this Contract, covenants and agrees to pay Contractor in current funds, subject to additions and deductions by Change Order as provided in the Contract Documents, the sum of _____Dollars ($_____), which sum shall constitute the Contract Sum, said Contract Sum being derived from Contractor's Bid dated _____. It is understood and agreed that should there be any increase in wage rates, or in cost of materials or equipment, or in any other of Contractor's costs or should Contractor be compelled to pay premium wages, or for overtime work, during the life of this Contract and/or prior to completion of Contractor's work thereunder, Contractor shall absorb all such increased costs, without addition to the Contract Sum except when otherwise expressly provided in Contract Documents.

2. Payments: Owner shall make payments for work performed under the Contract as provided in Article Nine of the General Conditions and in accordance with other applicable articles of the Supplementary Conditions and Contract Documents.

3. Contractor's Fees for Changes in Work: In accordance with Contractor's bid, it is agreed that the following percentages for overhead and profit shall be applied on work added to or omitted from the Contract by written Change Order approved by Architect and Owner in advance of performance of the work.

   Additional Work performed by:

   1. Own Forces ____% 2. Subcontractors ___%

   Omitted Work originally required by:

   1. Own Forces ____% 2. Subcontractors ____%

   Note: Taxes (when applicable) are considered as incidentals, as well as bonds and insurance costs and are not included in the percentages listed above nor should they be added to change orders submitted.

F. CONTRACT DOCUMENTS:

1. Contract Documents include the Contract Agreement, Contractor's Bid as accepted by Owner, Conditions of the Contract (General, Supplementary and other Conditions), Drawings, Specifications, and all Addenda issued prior to and all Modifications issued after execution of the Contract Agreement.

2. Bidder’s attention is directed to the fact that all Federal and Illinois State Laws, municipal ordinances and regulations of any and all authority having jurisdiction over construction of the project shall apply to the contract throughout, and they will be deemed to be included in the contract the same as though herein written

out in full. Successful Bidders shall be required to comply with 777 ILCS 10 concerning equal employment opportunities; comply with 30 ILCS 570 concerning the employment of citizens of the State of Illinois; comply with 820 ILCS 265 concerning substance abuse prevention on public works projects; and comply with 820 ILCS 130 concerning prevailing wages.

G. ILLINOIS LABOR:

Contractor shall comply with all Illinois statutory requirements regarding labor, including, but not limited to, the following:

1. Illinois Public Act 77-1552 and Chapter 48, Sections 39S-1 through 39S-12 of the Illinois Revised Statutes regulating wages of laborers, mechanics and other workers employed in any public works and known as the "Prevailing Wage Act," which provides in part that all laborers, mechanics and workers performing work under the Contract shall be paid not less than the prevailing rate of wages as determined by the Illinois Department of Labor (820 ILCS 130).

2. Illinois Public Act 83-1472, Article 2 and Chapter 48, Sections 2201 through 2207, 1984 of the Illinois Revised Statutes pertaining to hiring of Illinois labor and known as the "Illinois Preference Act (30 ILCS 570)."

3. "Illinois Human Rights Act of 1980," Chapter 68, Illinois Revised Statutes, and the Rules and Regulations, Title 44, Section 750 of the Illinois Administrative Code, Illinois Department of Human Rights; pertaining to equal employment opportunity (777 ILCS 10).

H. PERFORMANCE BOND AND LABOR AND MATERIAL PAYMENT BOND:

1. Within ten (10) days immediately following date of his receipt of this contract, Contractor shall furnish Owner the signed Contract and Performance Bond and Labor and Material Payment Bond as required by and in accordance with the terms of Contract Documents in a penal sum of one hundred percent (100%) of the Contract sum.

2. In the event Contractor fails to furnish Owner such Contract and Bonds within said period, this Contract shall thereupon become null and void at Owner's option, exercised by written registered notice and mailed to Contractor by said Owner within five (5) days thereafter. Owner may then retain and enforce as liquidated damages, bid guarantee heretofore deposited with it in connection with Contractor's proposal for this Contract or the difference between his bid and a subsequent awarded bid, whichever is lesser.

I. IN WITNESS HEREOF, the parties hereto have executed this agreement as of the day and year first written above.

OWNER:

HILLSBORO C.U.S.D. NO. 3

BY_____

TITLE_____

CONTRACTOR:

_____

Attest:

BY_____
Secretary

BY_____

TITLE_____

(Corporate Seal)

END OF DOCUMENT

CONTRACTOR'S AFFIDAVIT FOR FINAL COMPLETION
(To be filed with final request for payment)

STATE OF_____)

COUNTY OF _____)

_____, being first duly sworn upon oath deposes and says:

That he/she is _____ of _____
_____

hereinafter termed "The Contractor" for all work upon the hereinafter termed "Said Project," work for the HILLSBORO C.U.S.D. NO. 3, under that certain contract between said Contractor and said Owner, bearing date of _____ pertaining to said work.

Affiant further states, of his/her own knowledge, that all bills incurred by the Contractor, for services, labor and material furnished, for work done by the Contractor under said Contract, or in connection with said project have been paid and all subcontractors who have furnished services, labor or materials have no claim or demand against Owner for any services, labor and/or materials furnished and/or work done by them upon said Project.

Affiant further states that this affidavit is made on behalf of the Contractor for the purpose of obtaining payment of the sum of _____($_____) dollars, which affiant states, upon his/her own knowledge, constitutes the full balance due the Contractor for all services, labor and materials furnished and work done to and upon Said Project by the Contractor whether under and pursuant to provisions of said Contract and all subsequent modifications thereof and changes therein or otherwise; and that payment of the sum to the Contractor will constitute payment in full on everything due for such services, labor, materials and work, and will fully satisfy any and all claims or demands which Contractor may have or assert against said Owner, arising out of anything done or furnished by the Contractor or occurring in connection with said Project and/or Contract.

_____
CONTRACTOR

By _____

Title _____

Subscribed and Sworn to before me the _____ day of_____, 20____.

_____
NOTARY PUBLIC

(PARTIAL) (FINAL)
WAIVER OF LIEN

STATE OF _____
}SS
COUNTY OF _____

TO WHOM IT MAY CONCERN:

WHEREAS the undersigned has been employed by HILLSBORO C.U.S.D. NO. 3, hereinafter known as the OWNER,

To Furnish: _____

For the project known as: REBID: CORRIDOR ADDITION

For the premises known as: HILLSBORO JUNIOR HIGH SCHOOL, HILLSBORO C.U.S.D. NO. 3

Address: HILLSBORO, ILLINOIS

THE undersigned, for and in consideration of the dollar amount shown below and other good and valuable considerations, do(es) hereby waive and release under the mechanics' lien statutes of the State where the project premises are located, to the extent of the payment recited below is received by the undersigned and is applicable to lienable labor, services, materials, fixtures, or apparatus, any and all lien or claim or right of lien on the above-described premises and the improvements, fixtures and appurtenances thereon, and on the monies or other considerations due or to become due from the Owner and on all other project-related monies from whatever source, on the account of the above-mentioned labor, services, materials, fixtures, or apparatus furnished by the undersigned for or in connection with the above-described premises.

_____
(Payment amount written in long form)

PAYMENT AMOUNT _____

_____
(Company Name)

_____
(Address)

_____
(City/State/Zip)

_____
(Signature of Officer)

Sworn to and subscribed before me this _____ day of _____.

(Notary Public)

My commission expires: _____

AFFIDAVIT OF PAYMENT TO MATERIAL SUPPLIERS AND SUBCONTRACTORS

STATE OF _____

COUNTY OF _____

_____, being first duly sworn upon oath deposes and says, that he/she entered into a Contract with the HILLSBORO C.U.S.D. NO. 3, known as the Owner, for furnishing of labor, work services, materials, fixtures, and supplies for construction of REBID: CORRIDOR ADDITION the following described real estate: HILLSBORO JUNIOR SCHOOL, HILLSBORO, ILLINOIS.

That for the purpose of said Contract, the following persons, firms or corporations have been contracted with to furnish, have furnished or prepared, or will furnish or prepare labor, services, materials, fixtures, apparatus, machinery or supplies, or are furnishing and preparing material for said construction; that there are due or to become due to them respectively, the amounts set opposite their names for said labor, services, materials, fixtures, apparatus, machinery and supplies as stated; that there are no other contractors outstanding and there is nothing due or to become due any person, firm, or corporation, for labor, services, materials, fixtures, machinery, apparatus, or supplies, other than as stated herewith.

MATERIAL SUPPLIER AND/OR SUBCONTRACTOR	CONTRACT ITEM	CONTRACT AMOUNT	AMOUNT PAID TO DATE	AMOUNT DUE OR TO BECOME DUE

_____
CONTRACTOR

Subscribed and sworn to before me, a Notary Public, this _____day of _____; A.D. 20____.

_____
NOTARY PUBLIC

CONSENT OF SURETY COMPANY TO FINAL PAYMENT
(To be filed with final request for payment)

PROJECT: REBID: CORRIDOR ADDITION
HILLSBORO JUNIOR HIGH SCHOOL
HILLSBORO C.U.S.D. NO. 3
HILLSBORO, MONTGOMERY COUNTY, ILLINOIS

TO (Owner): HILLSBORO C.U.S.D. NO. 3
1311 VANDALIA ROAD
HILLSBORO, ILLINOIS 62049

CONTRACTOR:
(Name, address)

CONTRACT DATE: BOND NO.:

In accordance with the provisions between Owner and Contractor indicated above, _____
_____
_____ SURETY COMPANY, hereby approves of final payment to Contractor, and agrees that final payment to Contractor shall not relieve Surety Company of any of its obligations to Owner, as set forth in Surety Company's bond.

IN WITNESS WHEREOF, Surety Company has hereunto set its hand this _____ day of _____, 20___.

_____ _____
Attest: Surety Company

(Seal): _____
Signature of Authorized Representative

_____
Title

DOCUMENT 007214 - GENERAL CONDITIONS – AIA STIPULATED SUM

1.1 SUMMARY

A. Document Includes:
   1. General Conditions.

B. Related Documents:
   1. Document 005214 – Agreement Form – AIA Stipulated Sum.
   2. Document 007313 – Supplementary Conditions - AIA.

1.2 GENERAL CONDITIONS

A. AIA Document A201-2007, General Conditions of the Contract for Construction, is the General Conditions of the Contract.

1.3 SUPPLEMENTARY CONDITIONS

A. Refer to Document 007313 for modifications to General Conditions.

END OF DOCUMENT

DOCUMENT 007313 - SUPPLEMENTARY CONDITIONS - AIA

1.1 SUMMARY

A. Document Includes:
   1. General Conditions.
   2. Supplementary Conditions.

B. Related Documents:

   1. Document 004113 – Bid Form – Stipulated Sum
   2. Document 005214 – Agreement Form - AIA

1.2 GENERAL CONDITIONS

A. The General Conditions of the Contract for Construction, AIA Document A201, Sixteenth Edition, 2007, Articles 1 through 15, is a part of this Contract and is incorporated herein as fully as if here set forth. Copies of the General Conditions are on file and may be reviewed at the offices of the Architect, or may be obtained from the American Institute of Architects, St. Louis Chapter, 911 Washington St., #225, St. Louis, Missouri 63101-1203.

1.3 SUPPLEMENTARY CONDITIONS

A. The following supplements modify, change, delete from or add to the "General Conditions of the Contract for Construction," AIA Document A201, Sixteenth Edition, 2007. Where any Article of the General Conditions is modified or changed or any Paragraph, Subparagraph or Clause thereof is modified, changed or deleted by these supplements, the unaltered provisions of that Article, Paragraph, Subparagraph or Clause shall remain in effect.

1.4 REFERENCE TO DIVISION 01

A. Where provisions of General Conditions relate to project administrative or work-related requirements of the Contract, and those provisions differ from those specified in Division 01, provisions outlined in Division 01 shall prevail.

1.5 ARTICLE 1: GENERAL PROVISIONS

A. 1.5.1 In the second line following the word "Specifications" insert the words "and Project Manual,".

B. 1.6 TRANSMISSION OF DATA IN DIGITAL FORM: Add new subparagraph 1.6.1:

   1.6.1 Electronic drawings provided by the Owner or Architect are for informational purposes only and are not intended for any other use. The paper copies provided are a true representation of the completed design and if discrepancies should exist

between the paper copy and the electronic copy, the paper copy shall govern.

C. Delete Subparagraph 1.1.8 its entirety and substitute the following:

1.1.8 INITIAL DECISION MAKER

The Initial Decision Maker is the person identified in the Agreement to render initial decisions on Claims in accordance with Section 15.2 and certify termination of the Agreement under Section 14.2.2. If the Initial Decision Maker is not specifically identified in the Agreement, the responsibilities of the Initial Decision Maker shall default to the Architect.

D. DEFINITIONS: Add Paragraph 1.1.9

1.1.9 PROJECT MANUAL

The Project Manual is the collection of documents which includes the bidding requirements, sample forms and, certain Contract Documents such as the Conditions of the Contract and the Specifications.

1.6 ARTICLE 2: OWNER

A. 2.2 INFORMATION AND SERVICES REQUIRED OF THE OWNER:

B. Delete Subparagraphs 2.2.3 and 2.2.5 in their entireties and substitute the following:

2.2.3 The Owner shall, at the request of the Contractor, furnish to Contractor any survey or other similar descriptive information of project site that Owner has in his possession. Upon demonstration of need by Contractor for specific additional survey information, Owner shall obtain and furnish such information to Contractor.

2.2.5 Contractor will be furnished, free of charge, 4 copies of Drawings, Specifications, and Project Manual as set forth in Division 1 of the Specifications. Additional copies will be furnished to Contractor at cost of reproduction, postage and handling.

1.7 ARTICLE 3: CONTRACTOR

3.2. REVIEW OF CONTRACT DOCUMENTS AND FIELD CONDITIONS BY CONTRACTOR: Add Subparagraphs 3.2.5 and 3.2.6:

3.2.5 The Contractor by executing the Contract represents that he has carefully examined the Site of the Work at each location and that he has full knowledge of and fully understands the facilities, site conditions, difficulties and restrictions attending performance of the Work. Contractor further represents that he has taken all required measurements and carefully inspected existing constructions, irregularities and interferences which may affect the Work. No additional compensation will be allowed for conditions increasing Contractor's cost which were not known to or appreciated by him prior to executing the Contract if they

could have been discovered by him following the foregoing procedures and thoroughly informing himself of all existing conditions affecting the Work.

3.2.6 Contractor will not, however, be required to excavate, penetrate or demolish any constructions or other work and conditions prior to executing the Contract in order to uncover and/or expose concealed conditions that affect the Work. If, during course of construction, Contractor uncovers conditions that affect the work that could not have been known and understood by the above described careful examination of conditions affecting the Work, he shall promptly notify the Architect, in writing, who will determine if claims for additional costs or extensions of time are justified. If such claims are found to be justified, Contract will be modified in accordance with Article 7 of the General Conditions.

1.8 ARTICLE 4: ARCHITECT

A. 4.1 GENERAL: Delete Subparagraph 4.1.1 in its entirety and substitute the following:

4.1.1 The Owner shall retain an architect or engineer lawfully licensed to practice architecture or engineering or an entity lawfully practicing architecture or engineering in the jurisdiction where the Project is located. That person or entity is identified as the Architect in the Agreement and is referred to throughout the Contract Documents as if singular in number.

1.9 ARTICLE 5: SUBCONTRACTORS

A. 5.2 AWARD OF SUBCONTRACTS AND OTHER CONTRACTS FOR PORTIONS OF THE WORK: Add new Subparagraph 5.2.1.1.:

5.2.1.1. Within ten (10) days of notification of acceptance of his proposal, Contractor shall submit the names of those to whom he intends to award a Subcontract.

1.10 ARTICLE 6: CONSTRUCTION BY OWNER OR BY SEPARATE CONTRACTORS

A. 6.1 OWNER'S RIGHT TO PERFORM CONSTRUCTION AND TO AWARD SEPARATE CONTRACTS: Delete Subparagraph 6.1.3 in its entirety and substitute the following:

6.1.3 General Contractor shall have responsibility of coordinating efforts of all contractors and to maintain overall direction of job progress. Each Contractor shall coordinate operational methods with other contractors and encourage communications among all trades. All Contractors shall make other contractors aware of any problems, delays in materials shipments or lack of work force, and assist other contractors in maintaining job momentum and direction of overall project.

1.11 ARTICLE 9: PAYMENTS AND COMPLETION

A. 9.3 APPLICATIONS FOR PAYMENT: Add new Subparagraph 9.3.1.3

9.3.1.3.: Until Substantial Completion, the Owner will pay 90 percent of the amount due Contractor on account of approved progress payments.

1.12 ARTICLE 11: INSURANCE AND BONDS

A. 11.1.1 In the first line following the word "maintain," insert the words "in a company or companies licensed to do business in the state in which the project is located and rated 'A' or better by A.M. Best Co.."

B. Add new Subparagraph 11.1.1.9:

11.1.1.9 General Liability Insurance shall be comprehensive, on occurrence, and shall include:

- Premises and Operations.
- Independent Contractors.
- Products and Completed Operations.
- Broad Form Property Damage.
- Personal Injury.
- Explosion, Collapse and Underground damage where the hazard exists.
- Contractual liability.

C. Add the following Sub-Subparagraphs to Subparagraph 11.1.2:

11.1.2.1 The insurance required by Subparagraph 11.1.1 shall be on a project specific basis and written for not less than the following, or greater if required by law:

1. Worker's Compensation:

   a. State: Statutory
   b. Applicable Federal: Statutory
   c. Employer's Liability: $500,000

2. Comprehensive General Liability:

   a. Bodily Injury:

      $1,000,000 Combined Single Limit

   b. Property Damage:

      $1,000,000 Combined Singled Limit

Limit Coverage for bodily injury and property damage per occurrence and in the same aggregate limit will be accepted in lieu of the separate limits specified above.

3. Personal Injury:

$ 1,000,000	Combined single limit including owned non-owned, and hired motor vehicle.

4. Comprehensive Automobile Liability:

a. Bodily Injury:

$1,000,000	Combined single limit including owned, non-owned, and hired motor vehicle.

b. Property Damage:

$1,000,000	Combined single limit including owned, non-owned, and hired motor vehicle

c.	$1,000,000	Combined Single

Limit coverage for bodily injury and property damage per occurrence and in the same aggregate limit will be accepted in lieu of the separate limits specified above.

11.1.2.2 Umbrella Form Liability Coverage:

An Umbrella Form Liability coverage to not less than $2,000,000 for any one occurrence and subject to the same aggregate over the Employer's Liability, Comprehensive General Liability, and Comprehensive Automobile Liability coverage is required.

D. Add the following Subparagraph 11.1.3.1:

11.1.3.1 Contractor shall furnish one copy each of Certificates of Insurance herein required for each copy of the Agreement which shall specifically set forth evidence of all coverage required by Paragraph 11.1. The Certificate of Insurance is to be accompanied by AIA Document G715TM-1997 (Supplemental Attachment for ACORD Certificate of Insurance 25-S). Contractor shall furnish to the Owner copies of any endorsements that are subsequently issued amending coverage or limits. The Contractor shall furnish to the Owner notice of any policy cancellation at least 30 days (10 days for non payment of premiums) prior to the effective date of cancellation. The Contractor shall submit copies of subcontractor's Certificates of Insurance prior to the beginning of work.

E. Add the following Subparagraph 11.1.4.1:

11.1.4.1 The Owner and Architect shall be named as additional insureds on ISO form 20331001 by endorsement for the purpose of coverage only with no liability for premium payments. All policies and coverages shall include a waiver of subrogation in favor of the Owner, Architect, and all subconsultants.

F. 11.3. PROPERTY INSURANCE: Delete Subparagraph 11.3.1 in its entirety and substitute the following:

11.3.1: The General Contractor shall be responsible to maintain property (builder's risk) insurance upon the completed value of all work at the site under this contract to the full insurable value thereof. This insurance shall include the interests of the Owner, the General Contractor, Subcontractors, and Sub-subcontractors in the work and as their interests may appear in the work, and shall be an all-risk type policy, including theft, subject to the exclusions generally accepted in the insurance industry. This coverage is not intended to, and shall not, provide coverage for tools, equipment, scaffolding, forms, or other devices used by the Contractors or Subcontractors in performing work under this contract.

11.3.1.2 Delete this Paragraph in its entirety.

G. Delete Subparagraphs 11.3.1.3 in its entirety and substitute the following:

11.3.1.3 If the property insurance requires deductibles, the Contractor shall pay costs not covered because of such deductibles.

1.13 ARTICLE 13: MISCELLANEOUS PROVISIONS

A. Add new paragraph 13.8 as follows:

13.8 REFERENCED STANDARDS

13.8.1 No provision of any referenced standard specification, manual or code; whether or not specifically incorporated by reference in the Contract Documents; shall be effective to change the duties and responsibilities of Owner, Contractor or Architect, or any of their consultants, agents or employees from those set forth in the Contract Documents, nor shall it be effective to assign to Architect, or any of Architect's consultants, agents or employees, any duty or authority to supervise or direct the furnishing or performance of the Work or any duty or authority to undertake responsibility contrary to the provisions of Articles 1 through 15.

END OF SECTION

ARTICLE 25: PREVAILING RATE OF WAGES

25.1 Pursuant to Illinois Compiled Statutes 820 ILCS 130/0.01 et seq., these specifications list on the following pages, the Illinois Department of Labor prevailing rate of wages for the county where the contract is being performed and for each craft or type of worker needed to execute the contract.

Prevailing Wage rates for Montgomery County effective Sept. 1, 2017												
Trade Title	**Region**	**Type**	**Class**	**Base Wage**	**Fore-man Wage**	**M-F OT**	**OSA**	**OSH**	**H/W**	**Pension**	**Vacation**	**Training**
ASBESTOS ABT-GEN	ALL	ALL		26.05	26.55	1.5	1.5	2	6.30	19.19	0.00	0.80
ASBESTOS ABT-MEC	ALL	BLD		31.56	32.56	1.5	1.5	2	8.25	3.00	0.00	0.00
BOILERMAKER	ALL	BLD		36.50	39.00	1.5	1.5	2	7.07	22.82	1.50	0.65
BRICK MASON	ALL	BLD		32.73	34.65	1.5	1.5	2	8.35	11.24	2.00	0.80
CARPENTER	ALL	BLD		31.39	33.64	1.5	1.5	2	8.45	17.00	0.00	0.54
CARPENTER	ALL	HWY		32.15	33.90	1.5	1.5	2	8.45	17.00	0.00	0.52
CEMENT MASON	ALL	ALL		33.25	34.25	1.5	1.5	1.5	9.90	13.50	0.00	0.30
CERAMIC TILE FNSHER	ALL	BLD		27.48	0.00	1.5	1.5	2	6.45	5.70	0.00	0.58
ELECTRIC PWR EQMT OP	NE	ALL		43.76	54.80	1.5	1.5	2	6.81	12.25	0.00	0.44
ELECTRIC PWR EQMT OP	SW	ALL		42.65	0.00	1.5	1.5	2	6.95	11.95	0.00	0.43
ELECTRIC PWR GRNDMAN	NE	ALL		29.96	54.80	1.5	1.5	2	6.40	8.39	0.00	0.30
ELECTRIC PWR GRNDMAN	SW	ALL		31.84	0.00	1.5	1.5	2	5.19	8.92	0.00	0.32
ELECTRIC PWR LINEMAN	NE	ALL		48.61	54.80	1.5	1.5	2	6.96	13.61	0.00	0.49
ELECTRIC PWR LINEMAN	SW	ALL		49.05	51.42	1.5	1.5	2	7.99	13.73	0.00	0.49
ELECTRIC PWR TRK DRV	NE	ALL		31.42	54.80	1.5	1.5	2	6.44	8.80	0.00	0.31
ELECTRIC PWR TRK DRV	SW	ALL		34.81	0.00	1.5	1.5	2	5.67	9.76	0.00	0.35
ELECTRICIAN	E	BLD		36.87	40.56	1.5	1.5	2	7.20	9.34	0.00	0.55
ELECTRICIAN	NW	BLD		35.44	37.44	1.5	1.5	2	7.48	9.96	0.00	0.40
ELECTRICIAN	SW	ALL		39.16	41.51	1.5	1.5	2	7.99	10.02	0.00	0.98
ELECTRONIC SYS TECH	E	BLD		32.73	34.73	1.5	1.5	2	6.95	6.87	0.00	0.40
ELECTRONIC SYS TECH	W	BLD		33.00	35.00	1.5	1.5	2	3.65	9.24	0.00	0.40
ELEVATOR CONSTRUCTOR	ALL	BLD		43.43	48.86	2	2	2	15.28	15.71	3.47	0.60
GLAZIER	ALL	BLD		35.91	37.91	1.5	1.5	2	6.25	9.16	0.00	0.68
HT/FROST INSULATOR	ALL	BLD		38.42	39.42	1.5	1.5	2	9.65	12.11	3.90	0.64
IRON WORKER	N	BLD		31.29	33.29	1.5	1.5	2	9.61	14.48	0.00	0.66

IRON WORKER	N	HWY		32.52	34.27	1.5	1.5	2	9.61	15.14	0.00	0.70
IRON WORKER	S	ALL		32.00	34.00	1.5	1.5	2	9.46	15.50	0.00	0.42
LABORER	ALL	ALL		25.55	26.05	1.5	1.5	2	6.30	19.19	0.00	0.80
LATHER	ALL	BLD		31.39	33.64	1.5	1.5	2	8.45	17.00	0.00	0.54
MACHINIST	ALL	BLD		45.35	47.85	1.5	1.5	2	7.26	8.95	1.85	0.00
MARBLE FINISHERS	ALL	BLD		27.48	0.00	1.5	1.5	2	6.45	5.70	0.00	0.58
MILLWRIGHT	ALL	BLD		31.74	33.99	1.5	1.5	2	8.45	17.11	0.00	0.54
MILLWRIGHT	ALL	HWY		33.58	35.33	1.5	1.5	2	8.20	16.67	0.00	0.52
OPERATING ENGINEER	ALL	BLD	1	37.70	40.70	1.5	1.5	2	12.35	18.00	0.00	1.00
OPERATING ENGINEER	ALL	BLD	2	36.57	40.70	1.5	1.5	2	12.35	18.00	0.00	1.00
OPERATING ENGINEER	ALL	BLD	3	32.09	40.70	1.5	1.5	2	12.35	18.00	0.00	1.00
OPERATING ENGINEER	ALL	BLD	4	32.15	40.70	1.5	1.5	2	12.35	18.00	0.00	1.00
OPERATING ENGINEER	ALL	BLD	5	31.82	40.70	1.5	1.5	2	12.35	18.00	0.00	1.00
OPERATING ENGINEER	ALL	BLD	6	40.25	40.70	1.5	1.5	2	12.35	18.00	0.00	1.00
OPERATING ENGINEER	ALL	BLD	7	40.55	40.70	1.5	1.5	2	12.35	18.00	0.00	1.00
OPERATING ENGINEER	ALL	BLD	8	40.83	40.70	1.5	1.5	2	12.35	18.00	0.00	1.00
OPERATING ENGINEER	ALL	BLD	9	38.70	40.70	1.5	1.5	2	12.35	18.00	0.00	1.00
OPERATING ENGINEER	ALL	HWY	1	36.20	39.20	1.5	1.5	2	12.35	18.00	0.00	1.00
OPERATING ENGINEER	ALL	HWY	2	35.07	39.20	1.5	1.5	2	12.35	18.00	0.00	1.00
OPERATING ENGINEER	ALL	HWY	3	30.59	39.20	1.5	1.5	2	12.35	18.00	0.00	1.00
OPERATING ENGINEER	ALL	HWY	4	30.65	39.20	1.5	1.5	2	12.35	18.00	0.00	1.00
OPERATING ENGINEER	ALL	HWY	5	30.32	39.20	1.5	1.5	2	12.35	18.00	0.00	1.00
OPERATING ENGINEER	ALL	HWY	6	38.75	39.20	1.5	1.5	2	12.35	18.00	0.00	1.00
OPERATING ENGINEER	ALL	HWY	7	39.05	39.20	1.5	1.5	2	12.35	18.00	0.00	1.00
OPERATING ENGINEER	ALL	HWY	8	39.33	39.20	1.5	1.5	2	12.35	18.00	0.00	1.00
OPERATING ENGINEER	ALL	HWY	9	37.20	39.20	1.5	1.5	2	12.35	18.00	0.00	1.00
PAINTER	ALL	BLD		31.25	32.75	1.5	1.5	2	5.90	10.52	0.00	0.70
PAINTER	ALL	HWY		32.45	33.95	1.5	1.5	2	5.90	10.52	0.00	0.70
PAINTER OVER 30FT	ALL	BLD		32.25	33.75	1.5	1.5	2	5.60	9.77	0.00	0.70
PAINTER PWR EQMT	ALL	BLD		32.25	33.75	1.5	1.5	2	5.90	10.52	0.00	0.70
PAINTER PWR EQMT	ALL	HWY		33.45	34.95	1.5	1.5	2	5.90	10.52	0.00	0.70

PILEDRIVER	ALL	BLD		32.29	34.64	1.5	1.5	2	8.45	17.00	0.00	0.54
PILEDRIVER	ALL	HWY		32.15	33.90	1.5	1.5	2	8.45	17.00	0.00	0.52
PIPEFITTER	NE	BLD		41.84	45.84	1.5	1.5	2	7.10	10.16	0.00	1.01
PIPEFITTER	SW	BLD		41.41	43.48	1.5	2	2	5.00	8.75	0.00	0.35
PLASTERER	ALL	BLD		31.75	32.75	1.5	1.5	2	9.90	9.40	0.00	0.30
PLUMBER	NE	BLD		41.84	45.84	1.5	1.5	2	7.10	10.16	0.00	1.01
PLUMBER	SW	BLD		41.41	43.48	1.5	2	2	5.00	8.75	0.00	0.35
ROOFER	ALL	BLD		30.00	32.50	1.5	1.5	2	10.40	8.70	0.00	0.53
SHEETMETAL WORKER	ALL	ALL		33.05	34.55	1.5	1.5	2	8.83	8.04	1.99	0.42
SPRINKLER FITTER	ALL	BLD		37.12	39.87	1.5	1.5	2	8.42	8.50	0.00	0.35
TERRAZZO FINISHER	ALL	BLD		31.24	0.00	1.5	1.5	2	6.45	4.37	0.00	0.42
TERRAZZO MASON	ALL	BLD		31.83	31.83	1.5	1.5	2	7.00	6.80	0.00	0.82
TRUCK DRIVER	ALL	ALL	1	36.26	40.15	1.5	1.5	2	12.16	6.10	0.00	0.25
TRUCK DRIVER	ALL	ALL	2	36.77	40.15	1.5	1.5	2	12.16	6.10	0.00	0.25
TRUCK DRIVER	ALL	ALL	3	37.05	40.15	1.5	1.5	2	12.16	6.10	0.00	0.25
TRUCK DRIVER	ALL	ALL	4	37.36	40.15	1.5	1.5	2	12.16	6.10	0.00	0.25
TRUCK DRIVER	ALL	ALL	5	38.35	40.15	1.5	1.5	2	12.16	6.10	0.00	0.25
TRUCK DRIVER	ALL	O&C	1	29.01	32.12	1.5	1.5	2	12.16	6.10	0.00	0.25
TRUCK DRIVER	ALL	O&C	2	29.42	32.12	1.5	1.5	2	12.16	6.10	0.00	0.25
TRUCK DRIVER	ALL	O&C	3	29.64	32.12	1.5	1.5	2	12.16	6.10	0.00	0.25
TRUCK DRIVER	ALL	O&C	4	29.89	32.12	1.5	1.5	2	12.16	6.10	0.00	0.25
TRUCK DRIVER	ALL	O&C	5	30.68	32.12	1.5	1.5	2	12.16	6.10	0.00	0.25

Explanations MONTGOMERY COUNTY

CARPENTERS AND PILEDRIVERS (NORTH) - The area north of Route 108, running east to Route 55, then north to Routes 48/127, east following Route 48 from Raymond to Harvel.

ELECTRICIANS (EAST) - Townships of Audubon, East Fork, Fillmore, Irving, Nikomis, Roundtree, South Fillmore and Witt.

ELECTRICIANS (NW) - Townships of Bois D'Arc, Pitman, and Harvel (Northern projection).

ELECTRICIANS (SW) - Townships of Zanesville, Raymond, North and South Litchfield, Butler Grove, Hillsboro, Walshville and Grishman.

ELECTRIC POWER LINEMAN, GROUNDMAN, EQUIPMENT OPERATOR, TRUCK DRIVER (NE) - Entire county except Butler Grove, Grisham, Hillsboro, North and South Litchfield, Raymond, Walshville, and Zanesville Townships.

IRONWORKERS (NORTH) - That part of the county north of a diagonal line through Taylor Springs and Chapman.

PLUMBERS & PIPEFITTERS (SW) - That part of the county South and West of Route 127.

ELECTRONIC SYSTEMS TECHNICIAN (WEST) - Townships of Zanesville, Raymond, North Litchfield, Butler Grove, South Litchfield, Hillsboro, Walshville and Grisham.

The following list is considered as those days for which holiday rates of wages for work performed apply: New Years Day, Memorial Day, Fourth of July, Labor Day, Thanksgiving Day, Christmas Day and Veterans Day in some classifications/counties. Generally, any of these holidays which fall on a Sunday is celebrated on the following Monday. This then makes work performed on that Monday payable at the appropriate overtime rate for holiday pay. Common practice in a given local may alter certain days of celebration. If in doubt, please check with IDOL.

Oil and chip resealing (O&C) means the application of road oils and liquid asphalt to coat an existing road surface, followed by application of aggregate chips or gravel to coated surface, and subsequent rolling of material to seal the surface.

EXPLANATION OF CLASSES

ASBESTOS - GENERAL - removal of asbestos material/mold and hazardous materials from any place in a building, including mechanical systems where those mechanical systems are to be removed. This includes the removal of asbestos materials/mold and hazardous materials from ductwork or pipes in a building when the building is to be demolished at the time or at some close future date.

ASBESTOS - MECHANICAL - removal of asbestos material from mechanical systems, such as pipes, ducts, and boilers, where the mechanical systems are to remain.

CERAMIC TILE FINISHER AND MARBLE FINISHER

The handling, at the building site, of all sand, cement, tile, marble or stone and all other materials that may be used and installed by [a] tile layer or marble mason. In addition, the grouting, cleaning, sealing, and mixing on the job site, and all other work as required in assisting the setter.

The term "Ceramic" is used for naming the classification only and is in no way a limitation of the product handled. Ceramic takes into consideration most hard tiles.

ELECTRONIC SYSTEMS ELECTRICIAN

Installation, service and maintenance of low-voltage systems which utilizes the transmission and/or transference of voice, sound, vision, or digital for commercial, education, security and entertainment purposes for the following: TV monitoring and surveillance, background/foreground music, intercom and telephone interconnect, field programming, inventory control systems, microwave transmission, multi-media, multiplex, radio page, school, intercom and sound burglar alarms and low voltage master clock systems.

Excluded from this classification are energy management systems, life safety systems, supervisory controls and data acquisition systems not intrinsic with the above listed systems, fire alarm systems, nurse call systems and raceways exceeding fifteen feet in length.

OPERATING ENGINEER - BUILDING

GROUP I. Cranes, Dragline, Shovels, Skimmer Scoops, Clamshells or Derrick Boats, Pile Drivers, Crane-Type Backhoes, Asphalt Plant Operators, Concrete Plant Operators, Dredges, Asphalt Spreading Machines, All Locomotives, Cable Ways or Tower Machines, Hoists, Hydraulic Backhoes, Ditching Machines or Backfiller, Cherrypickers, Overhead Cranes, Roller - Steam or Gas, Concrete Pavers, Excavators, Concrete Breakers, Concrete Pumps, Bulk Cement Plants, Cement Pumps, Derrick-Type Drills, Boat Operators, Motor Graders or Pushcats, Scoops or Tournapulls, Bulldozers, Endloaders or Fork Lifts, Power Blade or Elevating Graders, Winch Cats, Boom or Winch Trucks or Boom Tractors, Pipe Wrapping or Painting Machines, Asphalt Plant Engineer, Journeyman Lubricating Engineer, Drills (other than Derrick Type), Mud Jacks, or Well Drilling Machines, Boring Machines or Track Jacks, Mixers, Conveyors (Two), Air Compressors (Two), Water Pumps regardless of size (Two), Welding Machines (Two), Siphons or Jets (Two), Winch Heads or Apparatuses (Two), Light Plants (Two), All Tractors regardless of size (straight tractor only), Fireman on Stationary Boilers, Automatic Elevators, Form Grading Machines, Finishing Machines, Power Sub-Grader or Ribbon Machines, Longitudinal Floats, Distributor Operators on Trucks, Winch Heads or Apparatuses (One), Mobil Track air and heaters (two to five), Heavy Equipment Greaser, Relief Operator, Assistant Master Mechanic and Heavy Duty Mechanic, self-propelled concrete saws of all types and sizes with their attachments, gob-hoppers, excavators all sizes, the repair and greasing of all diesel hammers, the operation and set-up of bidwells, water blasters of all sizes and their clutches, hydraulic jacks where used for hoisting, operation of log skidders, iceolators used on and off of pipeline, condor cranes, bow boats, survey boats, bobcats and all their attachments, skid steer loaders and all their attachments, creter cranes, batch plants, operator (all sizes), self propelled roto mills, operation of conveyor systems of any size and any configuration, operation, repair and service of all vibratory hammers, all power pacs and their controls regardless of location, curtains or brush burning machines, stump cutter

machines, Nail launchers when mounted on a machine or self-propelled, operation of con-cover machines, and all Operators except those listed below).

GROUP II. Assistant Operators.

GROUP III. Air Compressors (One), Water Pumps, regardless of Size (One), Waterblasters (one), Welding Machine (One), Mixers (One Bag), Conveyor (One), Siphon or Jet (One), Light Plant (One), Heater (One), Immobile Track Air (One), and Self Propelled Walk-Behind Rollers.

GROUP IV. Asphalt Spreader Oilers, Fireman on Whirlies and Heavy Equipment Oilers, Truck Cranes, Dredges, Monigans, Large Cranes - (Over 65-ton rated capacity) Concrete Plant Oiler, Blacktop Plant Oiler, and Creter Crane Oiler (when required).

GROUP V. Oiler.

GROUP VI. Operators on equipment with Booms,including jibs, 100 feet and over, and less than 150 feet long.

GROUP VII. Operators on equipment with Booms, including jibs, 150 feet and over, and less than 200 feet long.

GROUP VIII. Operators on Equipment with Booms, including jibs, 200 feet and over; Tower Cranes; and Whirlie Cranes.

GROUP IX. Master Mechanic

OPERATING ENGINEERS - Highway

GROUP I. Cranes, Dragline, Shovels, Skimmer Scoops, Clamshells or Derrick Boats, Pile Drivers, Crane-Type Backhoes, Asphalt Plant Operators, Concrete Plant Operators, Dredges, Asphalt Spreading Machines, All Locomotives, Cable Ways or Tower Machines, Hoists, Hydraulic Backhoes, Ditching Machines or Backfiller, Cherrypickers, Overhead Cranes, Roller - Steam or Gas, Concrete Pavers, Excavators, Concrete Breakers, Concrete Pumps, Bulk Cement Plants, Cement Pumps, Derrick-Type Drills, Boat Operators, Motor Graders or Pushcats, Scoops or Tournapulls, Bulldozers, Endloaders or Fork Lifts, Power Blade or Elevating Graders, Winch Cats, Boom or Winch Trucks or Boom Tractors, Pipe Wrapping or Painting Machines, Asphalt Plant Engineer, Journeyman Lubricating Engineer, Drills (other than Derrick Type), Mud Jacks, Well Drilling Machines, Boring Machines, Track Jacks, Mixers, Conveyors (Two), Air Compressors (Two), Water Pumps regardless of size (Two), Welding Machines (Two), Siphons or Jets (Two), Winch Heads or Apparatuses (Two), Light Plants (Two), All Tractors regardless of size (straight tractor only), Fireman on Stationary Boilers, Automatic Elevators, Form Grading Machines, Finishing Machines, Power Sub-Grader or Ribbon Machines, Longitudinal Floats, Distributor Operators on Trucks, Winch Heads or Apparatuses (One), Mobil Track air and heaters (two to five), Heavy Equipment Greaser,

Relief Operator, Assistant Master Mechanic and Heavy Duty Mechanic, self-propelled concrete saws of all types and sizes with their attachments, gob-hoppers, excavators all sizes, the repair and greasing of all diesel hammers, the operation and set-up of bidwells, water blasters of all sizes and their clutches, hydraulic jacks where used for hoisting, operation of log skidders, iceolators used on and off of pipeline, condor cranes, bow boats, survey boats, bobcats and all their attachments, skid steer loaders and all their attachments, creter cranes, batch plants, operator (all sizes), self propelled roto mills, operation of conveyor systems of any size and any configuration, operation, repair and service of all vibratory hammers, all power pacs and their controls regardless of location, curtains or brush burning machines, stump cutter machines, Nail launchers when mounted on a machine or self-propelled, operation of con-cover machines, and all Operators (except those listed below).

GROUP II. Assistant Operators.

GROUP III. Air Compressors (One), Water Pumps, regardless of Size (One), Waterblasters (one), Welding Machine (One), Mixers (One Bag), Conveyor (One), Siphon or Jet (One), Light Plant (One), Heater (One), Immobile Track Air (One), and Self Propelled Walk-Behind Rollers.

GROUP IV. Asphalt Spreader Oilers, Fireman on Whirlies and Heavy Equipment Oilers, Truck Cranes, Dredges, Monigans, Large Cranes - (Over 65-ton rated capacity) Concrete Plant Oiler, Blacktop Plant Oiler, and Creter Crane Oiler (when required).

GROUP V. Oiler.

GROUP VI. Operators on equipment with Booms, including jibs, 100 feet and over, and less than 150 feet long.

GROUP VII. Operators on equipment with Booms, including jibs, 150 feet and over, and less than 200 feet long.

GROUP VIII. Operators on Equipment with Booms, including jibs, 200 feet and over; Tower Cranes; and Whirlie Cranes.

GROUP IX. Mechanic

TRUCK DRIVER - BUILDING, HEAVY AND HIGHWAY CONSTRUCTION Class 1. Drivers on 2 axle trucks hauling less than 9 ton. Air compressor and welding machines and brooms, including those pulled by separate units, truck driver helpers, warehouse employees, mechanic helpers, greasers and tiremen, pickup trucks when hauling materials, tools, or workers to and from and on-the-job site, and fork lifts up to 6,000 lb. capacity.

Class 2. Two or three axle trucks hauling more than 9 ton but hauling less than 16 ton. A-frame winch trucks, hydrolift trucks, vactor trucks or similar equipment when used for transportation purposes. Fork lifts over 6,000 lb. capacity, winch trucks, four axle combination units, and ticket writers.

Class 3. Two, three or four axle trucks hauling 16 ton or more. Drivers on water pulls, articulated dump trucks, mechanics and working forepersons, and dispatchers. Five axle or more combination units.

Class 4. Low Boy and Oil Distributors.

Class 5. Drivers who require special protective clothing while employed on hazardous waste work.

TRUCK DRIVER - OIL AND CHIP RESEALING ONLY.

This shall encompass laborers, workers and mechanics who drive contractor or subcontractor owned, leased, or hired pickup, dump, service, or oil distributor trucks. The work includes transporting materials and equipment (including but not limited to, oils, aggregate supplies, parts, machinery and tools) to or from the job site; distributing oil or liquid asphalt and aggregate; stock piling material when in connection with the actual oil and chip contract. The Truck Driver (Oil & Chip Resealing) wage classification does not include supplier delivered materials.

TERRAZZO FINISHER

The handling of all materials used for Mosaic and Terrazzo work including preparing, mixing by hand, by mixing machine or transporting of pre-mixed materials and distributing with shovel, rake, hoe, or pail, all kinds of concrete foundations necessary for Mosaic and Terrazzo work, all cement terrazzo, magnesite terrazzo, Do-O-Tex terrazzo, epoxy matrix ter-razzo, exposed aggregate, rustic or rough washed for exterior or interior of buildings placed either by machine or by hand, and any other kind of mixture of plastics composed of chips or granules when mixed with cement, rubber, neoprene, vinyl, magnesium chloride or any other resinous or chemical substances used for seamless flooring systems, and all other building materials, all similar materials and all precast terrazzo work on jobs, all scratch coat used for Mosaic and Terrazzo work and sub-bed, tar paper and wire mesh (2x2 etc.) or lath. The rubbing, grinding, cleaning and finishing of same either by hand or by machine or by terrazzo resurfacing equipment on new or existing floors. When necessary finishers shall be allowed to assist the mechanics to spread sand bed, lay tarpaper and wire mesh (2x2 etc.) or lath. The finishing of cement floors where additional aggregate of stone is added by spreading or sprinkling on top of the finished base, and troweled or rolled into the finish and then the surface is ground by grinding machines.

Other Classifications of Work:

For definitions of classifications not otherwise set out, the Department generally has on file such definitions which are available. If a task to be performed is not subject to one of the classifications of pay set out, the Department will upon being contacted state which neighboring county has such a classification and provide such rate, such rate being deemed to exist by reference in this document. If no neighboring county rate applies to the task, the Department shall undertake a special determination, such special determination being then deemed to have existed under this determination. If a project requires these, or any classification not listed, please contact IDOL at 217-782-1710 for wage rates or clarifications.

LANDSCAPING

Landscaping work falls under the existing classifications for laborer, operating engineer and truck driver. The work performed by landscape plantsman and landscape laborer is covered by the existing classification of laborer. The work performed by landscape operators (regardless of equipment used or its size) is covered by the classifications of operating engineer. The work performed by landscape truck drivers (regardless of size of truck driven) is covered by the classifications of truck driver.

	GENERAL
G-101	COVER SHEET
G-102	ABBREVIATIONS, LEGEND, GENERAL NOTES, AND SHEET INDEX
	CIVIL
C-101	JUNIOR HIGH STORM WATER DRAINAGE PLANS, NOTES & DETAILS
	STRUCTURAL
S-001	GENERAL NOTES
S-101	FOUNDATION PLAN
S-102	FOUNDATION DETAILS
S-201	FRAMING PLAN AND DETAILS
S-221	JR. HIGH LINTEL DETAILS
S-301	MASONRY DETAILS
	ARCHITECTURAL
A-101	JUNIOR HIGH OVERALL FLOOR PLAN
A-102	JUNIOR HIGH ADDITION AREA PLANS
A-103	JUNIOR HIGH ADDITION REFLECTED CEILING AND RELATED DETAILS
A-104	JUNIOR HIGH ADDITION ROOF PLAN AND RELATED DETAILS
A-201	JUNIOR HIGH ADDITION BUILDING ELEVATIONS AND SECTIONS
A-301	JUNIOR HIGH ADDITION BUILDING SECTIONS
A-401	JUNIOR HIGH ADDITION MISCELLANEOUS DETAILS
	ELECTRICAL
E-001	SYMBOLS AND GENERAL NOTES
E-101	JUNIOR HIGH ADDITION DEMOLITION, POWER, LIGHTING, AND FIRE ALARM PLANS

All drawings dated June 4, 2018.

END 008600.

SECTION 011000 - SUMMARY

PART 1 GENERAL

1.1 SECTION INCLUDES

A. Contract description.

B. Contractor's use of site and premises.

C. Future work.

D. Work sequence.

E. Owner occupancy.

F. Specification Conventions.

G. Contractor’s Duties.

H. Contract Documents.

1.2 CONTRACT DESCRIPTION

A. Work of the Project consists of approximate 400 square foot corridor addition to connect two existing buildings at Hillsboro Junior High School. Building consists of concrete foundations, masonry walls, integrally colored concrete slab forming ADA compliant ramp, light gage metal joist and metal deck roof structure and membrane roofing. Finishes include painted concrete masonry unit walls, rubber base, vinyl tile and painted gypsum board ceilings. Civil, electrical and fire alarm scopes are commensurate with the work.

B. Perform Work of Contract under stipulated sum contract with Owner in accordance with Conditions of Contract.

1.3 CONTRACTOR'S USE OF SITE AND PREMISES

A. Limit use of site and premises to allow:
   1. Owner occupancy.
   2. Work by Others and Work by Owner.
   3. Use of site and premises by the public.

B. Construction Operations: Limited to areas noted on Drawings.

C. Utility Outages and Shutdown: Coordinate with owner to avoid interruption of normal operations.

D. Allow for public use of all adjoining streets and sidewalks.

E. Light duty vehicle parking is permitted. All parking lots and sidewalks are to be restored to their original condition.

1.4 OWNER OCCUPANCY

A. The Owner will occupy the premises during the entire period of construction for the conduct of normal operations.

B. Cooperate with Owner to minimize conflict, and to facilitate Owner's operations.

C. Schedule the Work to accommodate Owner occupancy.

1.5 SPECIFICATION CONVENTIONS

A. These specifications are written in imperative mood and streamlined form. This imperative language is directed to the Contractor, unless specifically noted otherwise. The words “shall be” are included by inference where a colon (:) is used within sentences or phrases.

1.6 CONTRACTOR’S DUTIES

A. Except as specifically noted, Contractor shall provide and pay for:
1. All labor, materials, and equipment used for construction of and/or incorporated into the project.
2. All tools, construction equipment and machinery.
3. Required building permits, and all inspection fees by governmental authorities.
4. Other facilities and services necessary for proper execution and complete of work.

B. Owner is exempt from sales tax on product permanently incorporated in work.
1. Obtain sales tax exemption certificate number from Owner.
2. Place exemption certificate number on invoices for materials incorporated in work.
3. Upon completion of work, file with Owner a notarized statement that all purchases made under exemption certificate were entitled to be exempt and furnish copies of invoice to Owner.
4. Pay legally assessed penalties for improper use of exemption certificate number.

C. Comply with codes, ordinances, rules, regulations, orders, and other legal requirements of public authorities which bear on performance of work.

D. Promptly submit written notice to Architect/Engineer of observed variance of contract documents from legal requirements.
1. It is not the Contractor’s responsibility to make certain that drawings and specifications comply with codes and regulations.
a. Appropriate modifications to contract documents will account for/reflect necessary changes.

b. Assume responsibility for work known to be contrary to such requirements if written notice is not provided by the Contractor to the Architect.

E. Enforce strict discipline and good order among employees.

F. Do not unreasonably encumber site with materials or equipment.

G. Do not load structure with weight that will endanger structure.

H. Assume full responsibility for protection and safe-keeping of products stored on premises.

I. Move any stored products which interfere with operations of Owner or other Contractors.

J. Obtain and pay for use of additional storage or work areas needed for operations.

K. The School Board shall prohibit the use of tobacco on school property when the property is being used for any school purposes. Tobacco shall mean cigarette, cigar, pipe or tobacco in any other form including smokeless tobacco which is any loose, cut, shredded, ground, powdered, compressed or leaf tobacco that is intended to be placed in the mouth without being smoked. All members of work crews must remain fully clothed and refrain from using obscene or profane language during these same time parameters. School purposes include, but are not limited to, all interscholastic or extracurricular athletic, academic, or other events sponsored by the School Board or in which students of the District participate.

L. Contractor shall maintain building free from entrance of water at all times during construction.

M. Contractor shall furnish, erect and maintain temporary ladders, ramps, or hoists as may be required for performance of his work.
1. All such equipment shall be substantially designed, constructed, and maintained in accordance with applicable federal, state, and local laws, ordinances, and regulations, and shall be promptly removed when no longer needed.

N. Contractor shall design, furnish, erect, maintain, and move all ladders and scaffolding required for this work.
1. All ladders and scaffolding shall be designed, constructed, and maintained in accordance with applicable federal, state, and local law, ordinances, and regulations, and shall be promptly removed when no longer needed.

1.7 CONTRACT DOCUMENTS

A. Contractor will be furnished free of charge four (4) copies of drawings and specifications.

B. On request, additional copies will be furnished to Contractor at cost of reproduction, postage and handling.

PART 2 PRODUCTS

Not Used.

PART 3 EXECUTION

Not Used.

END OF SECTION

SECTION 012000 - PRICE AND PAYMENT PROCEDURES

PART 1 GENERAL

1.1 SECTION INCLUDES

A. Schedule of values.

B. Applications for payment.

C. Change procedures.

D. Defect assessment.

1.2 SCHEDULE OF VALUES

A. Submit printed schedule on AIA Form G703 - Continuation Sheet for G702. Contractor's standard form or electronic media printout will be considered.

B. Submit Schedule of Values in duplicate within 10 days after date established in Notice to Proceed.

C. Format: Utilize Table of Contents of this Project Manual. Identify each line item with number and title of major specification Section. Identify site mobilization, bonds and insurance.

D. Include separately from each line item, direct proportional amount of Contractor's overhead and profit.

E. Revise schedule to list approved Change Orders, with each Application For Payment.

1.3 APPLICATIONS FOR PAYMENT

A. Submit three copies of each application on AIA Form G702-Application and Certificate for Payment. Contractor’s standard form or electronic media printout will be considered.

B. Content and Format: Utilize Schedule of Values for listing items in Application for Payment.

C. Submit updated construction schedule with each Application for Payment.

D. Payment Period: Submit at intervals stipulated in the Agreement.

E. Submit lien waivers.

F. Application for Progress Payment No. 1 shall be accompanied by a notarized statement on Contractor's letterhead as follows:

1. I certify that the funds requested for the accompanying Pay Request No. 1 will be used to pay all just and lawful bills against the undersigned and his subcontractors for labor, material and equipment employed in the performance of the work. I further certify that such bills will be paid no later than ten (10) calendar days from date of receipt of the Owner's disbursement.
2. Execute statement with signature of a responsible officer of contracting firm.

G. Each subsequent application for progress payment shall be accompanied by the following supporting documents:

1. Partial or final waivers of lien in monetary amount from Contractor, each material supplier and/or subcontractor reflecting amounts incorporated into preceding request for progress payment.
2. A notarized Affidavit of Payment to Material Suppliers and Subcontractors.
   a. Affidavit shall be submitted in exact text as exhibit furnished by Architect/Engineers, signed by Contractor or Subcontractor.
   b. Include unit item, actual amount of contract without overhead or profit, amount paid to date, and amount to become due (balance of account).

H. Progress payments will be made for materials and equipment not incorporated in the work provided that:

1. Such materials and equipment have been delivered to and suitable stored at site or some other location approved in writing by Owner and Architect/Engineer. All such materials stored off-site shall be marked or tagged with identification of project to which they are assigned.
2. Contractor submits evidence of title to such materials and equipment.
3. Care and custody of such materials and equipment and all costs incurred for movement and storage shall be responsibility of Contractor.
4. Such materials and equipment are suitably insured by Contractor. Contractor shall submit a certificate of insurance showing the Owner as an additional insured and showing amount of insurance overage of suitable proof that material and equipment are stored in a bonded warehouse.

I. Refer to Section 017000 for additional and related closeout procedures and requirements.

1.4 CHANGE PROCEDURES

A. Submittals: Submit name of individual authorized to receive change documents, and be responsible for informing others in Contractor's employ or Subcontractors of changes to the Work.

B. The Architect/Engineer will advise of minor changes in the Work not involving adjustment to Contract Sum/Price or Contract Time by issuing supplemental instructions in writing.

C. The Architect/Engineer may issue a Proposal Request including a detailed description of proposed change with supplementary or revised Drawings and specifications, a change in Contract Time for executing the change with stipulation of overtime work required and the period of time during which the requested price will be considered valid. Contractor will prepare and submit estimate within four days.

D. Contractor may propose changes by submitting a request for change to Architect/Engineer, describing proposed change and its full effect on the Work. Include a statement describing reason for the change, and effect on Contract Sum/Price and Contract Time with full documentation.

E. Stipulated Sum/Price Change Order: Based on Proposal Request and Contractor's fixed price quotation or Contractor's request for Change Order as approved by Architect/Engineer.

F. Architect/Engineer may issue directive, on Hurst-Rosche, Inc. Change Order form signed by Owner, instructing Contractor to proceed with change in the Work, for subsequent inclusion in a Change Order. Document will describe changes in the Work, and designate method of determining any change in Contract Sum/Price or Contract Time. Promptly execute change.

G. Execution of Change Orders: Architect/Engineer will issue Change Orders for signatures of parties as provided in Conditions of the Contract.

H. Correlation Of Contractor Submittals:
1. Promptly revise Schedule of Values and Application for Payment forms to record each authorized Change Order as separate line item and adjust Contract Sum/Price.
2. Promptly revise progress schedules to reflect change in Contract Time, revise sub-schedules to adjust times for other items of work affected by the change, and resubmit.
3. Promptly enter changes in Project Record Documents.

1.5 DEFECT ASSESSMENT

A. Replace the Work, or portions of the Work, not conforming to specified requirements.

B. Authority of Architect/Engineer to assess defects and identify payment adjustments, is final.

C. Non-Payment For Rejected Products: Payment will not be made for rejected products for any of the following:
1. Products wasted or disposed of in a manner that is not acceptable.
2. Products determined as unacceptable before or after placement.
3. Products not completely unloaded from transporting vehicle.
4. Products placed beyond lines and levels of required Work.
5. Products remaining on hand after completion of the Work.
6. Loading, hauling, and disposing of rejected products.

PART 2 PRODUCTS

Not Used.

PART 3 EXECUTION

Not Used.

END OF SECTION

SECTION 013000 - ADMINISTRATIVE REQUIREMENTS

PART 1 GENERAL

1.1 SECTION INCLUDES

A. Coordination and project conditions.

B. Preconstruction meeting.

C. Progress meetings.

D. Pre-installation meetings.

E. Cutting and patching.

F. Special procedures.

1.2 COORDINATION AND PROJECT CONDITIONS

A. Coordinate scheduling, submittals, and Work of various sections of Project Manual to ensure efficient and orderly sequence of installation of interdependent construction elements, with provisions for accommodating items installed later.

B. Verify utility requirements and characteristics of operating equipment are compatible with building utilities. Coordinate work of various sections having interdependent responsibilities for installing, connecting to, and placing in service, operating equipment.

C. Coordinate space requirements, supports, and installation of mechanical and electrical Work indicated diagrammatically on Drawings. Follow routing shown for pipes, ducts, and conduit, as closely as practicable; place runs parallel with lines of building. Utilize spaces efficiently to maximize accessibility for other installations, for maintenance, and for repairs.

D. In finished areas except as otherwise indicated, conceal pipes, ducts, and wiring within construction. Coordinate locations of fixtures and outlets with finish elements.

E. Coordinate completion and clean-up of Work of separate sections in preparation for Substantial Completion.

F. After Owner occupancy of premises, coordinate access to site for correction of defective Work and Work not in accordance with Contract Documents, to minimize disruption of Owner's activities.

1.3 PRECONSTRUCTION MEETING

A. Architect/Engineer will schedule meeting after Notice of Award.

B. Attendance Required: Owner, Architect/Engineer, and Contractor.

C. Agenda:
1. Submission of executed bonds and insurance certificates.
2. Distribution of Contract Documents.
3. Submission of list of products, schedule of values, and progress schedule.
4. Designation of personnel representing parties in Contract, and Architect/Engineer.
5. Procedures and processing of field decisions, submittals, substitutions, applications for payments, proposal request, Change Orders, and Contract closeout procedures.
6. Scheduling.
7. Use of premises by Owner and Contractor.
8. Owner's requirements and occupancy.
9. Construction facilities and controls provided by Owner.
10. Temporary utilities provided by Owner.
11. Security and housekeeping procedures.
12. Schedules.
13. Application for payment procedures.
14. Procedures for testing.
15. Procedures for maintaining record documents.
16. Requirements for start-up of equipment.
17. Inspection and acceptance of equipment put into service during construction period.
18. Proposed product list.

D. Architect/Engineer will record minutes and distribute copies with reasonable promptness after meeting to participants, with copies to Owner, and those affected by decisions made.

1.4 PROGRESS MEETINGS

A. Schedule and administer meetings throughout progress of the Work at maximum monthly intervals.

B. Architect/Engineer will make arrangements for meetings, prepare agenda with copies for participants, and preside at meetings.

C. Attendance Required: Job superintendent, major subcontractors and suppliers, Owner, Architect/Engineer, as appropriate to agenda topics for each meeting.

D. Agenda:
1. Review minutes of previous meetings.
2. Review of Work progress.
3. Field observations, problems, and decisions.
4. Identification of problems impeding planned progress.

5. Review of submittals schedule and status of submittals.
6. Review of off-site fabrication and delivery schedules.
7. Maintenance of progress schedule.
8. Corrective measures to regain projected schedules.
9. Planned progress during succeeding work period.
10. Coordination of projected progress.
11. Maintenance of quality and work standards.
12. Effect of proposed changes on progress schedule and coordination.
13. Other business relating to Work.

E. Architect/Engineer will record minutes and distribute copies with reasonable promptness after meeting to participants, with two copies to Architect/Engineer, Owner, and those affected by decisions made.

1.5 PRE-INSTALLATION MEETINGS

A. When required in individual specification sections, convene pre-installation meetings at Project site prior to commencing work of specific section.

B. Require attendance of parties directly affecting, or affected by, Work of specific section.

C. Notify Architect/Engineer four days in advance of meeting date.

D. Prepare agenda and preside at meeting:
1. Review conditions of installation, preparation and installation procedures.
2. Review coordination with related work.

E. Architect/Engineer will record minutes and distribute copies with reasonable promptness after meeting to participants, with copies to Owner, and those affected by decisions made.

PART 2 PRODUCTS

Not Used.

PART 3 EXECUTION

3.1 CUTTING AND PATCHING

A. Employ skilled and experienced installer to perform cutting and patching.

B. Submit written request in advance of cutting or altering elements affecting:
1. Structural integrity of element.
2. Integrity of weather-exposed or moisture-resistant elements.
3. Efficiency, maintenance, or safety of element.
4. Visual qualities of sight exposed elements.
5. Work of Owner or separate contractor.

C. Execute cutting, fitting, and patching including excavation and fill, to complete Work, and to:
   1. Fit the several parts together, to integrate with other Work.
   2. Uncover Work to install or correct ill-timed Work.
   3. Remove and replace defective and non-conforming Work.
   4. Remove samples of installed Work for testing.
   5. Provide openings in elements of Work for penetrations of mechanical and electrical Work.

D. Execute work by methods to avoid damage to other Work, and to provide proper surfaces to receive patching and finishing.

E. Cut masonry and concrete materials using masonry saw or core drill.

F. Restore Work with new products in accordance with requirements of Contract Documents.

G. Fit Work tight to pipes, sleeves, ducts, conduit, and other penetrations through surfaces.

H. Maintain integrity of wall, ceiling, or floor construction; completely seal voids.

I. At penetrations of fire rated walls, partitions, ceiling, or floor construction, completely seal voids with fire rated material, to full thickness of penetrated element.

J. Refinish or restore surfaces and finished to match existing finishes. For continuous surfaces, refinish to nearest intersection; for assembly, refinish entire unit.

K. Identify hazardous substances or conditions exposed during the Work to Architect/Engineer for decision or remedy.

3.2 SPECIAL PROCEDURES

A. Materials: As specified in product sections; match existing with new products and salvaged products for patching and extending work.

B. Employ skilled and experienced installer to perform alteration work.

C. Cut, move, or remove items as necessary for access to alterations and renovation Work. Replace and restore at completion.

D. Remove unsuitable material not marked for salvage, including rotted wood, corroded metals, and deteriorated masonry and concrete. Replace materials as specified for finished Work.

E. Remove debris and abandoned items from area and from concealed spaces.

F. Prepare surface and remove surface finishes to permit installation of new work and finishes.

G. Close openings in exterior surfaces to protect existing work from weather and extremes of temperature and humidity.

H. Remove, cut, and patch Work in manner to minimize damage and to permit restoring products and finishes to original condition.

I. Refinish existing visible surfaces to remain in renovated rooms and spaces, to renewed condition for each material, with neat transition to adjacent finishes.

J. Where new Work abuts or aligns with existing, provide smooth and even transition. Patch Work to match existing adjacent Work in texture and appearance.

K. When finished surfaces are cut so that smooth transition with new Work is not possible, terminate existing surface along straight line at natural line of division and submit recommendation to Architect/Engineer for review.

L. Where change of plane of 1/4 inch or more occurs, submit recommendation for providing smooth transition; to Architect/Engineer for review.

M. Trim existing doors to clear new floor finish. Refinish trim to original condition.

N. Patch or replace portions of existing surfaces which are damaged, lifted, discolored, or showing other imperfections.

O. Finish surfaces as specified in individual product sections.

END OF SECTION

SECTION 013300 - SUBMITTAL PROCEDURES

PART 1 GENERAL

1.1 SECTION INCLUDES

A. Submittal procedures.

B. Construction progress schedules.

C. Proposed products list.

D. Product data.

E. Shop drawings.

F. Design data.

G. Test reports.

H. Certificates.

I. Manufacturer's instructions.

1.2 SUBMITTAL PROCEDURES

A. Transmit each submittal with shop drawing submittal form found at the end of this section. A copy of submittal form must be attached to each copy of the submittal; if not, the submittal will be rejected and returned to the Contractor.

B. Identify Project, Contractor, subcontractor and supplier; pertinent drawing and detail number, and specification section number, appropriate to submittal.

C. Apply Contractor's stamp, signed or initialed certifying that review, approval, verification of products required, field dimensions, adjacent construction Work, and coordination of information is in accordance with requirements of the Work and Contract Documents.

D. Schedule submittals to expedite Project, and deliver to Architect/Engineer. Coordinate submission of related items.

E. For each submittal for review, allow 15 days excluding delivery time to and from Contractor.

F. Identify variations from Contract Documents and product or system limitations which may be detrimental to successful performance of completed Work.

G. Allow space on submittals for Contractor and Architect/Engineer review stamps.

H. When revised for resubmission, identify changes made since previous submission.

I. Distribute copies of reviewed submittals as appropriate. Instruct parties to promptly report inability to comply with requirements.

J. Submittals not requested will not be recognized or processed.

1.3 CONSTRUCTION PROGRESS SCHEDULES

A. Submit initial schedules within 10 days after date established in Notice to Proceed. After review, resubmit required revised data within ten days.

B. Submit revised Progress Schedules with each Application for Payment.

C. Distribute copies of reviewed schedules to Project site file, subcontractors, suppliers, and other concerned parties.

D. Instruct recipients to promptly report, in writing, problems anticipated by projections indicated in schedules.

E. Submit computer generated horizontal bar chart with separate line for each major portion of Work or operation, identifying first work day of each week.

F. Show complete sequence of construction by activity, identifying Work of separate stages and other logically grouped activities. Indicate early and late start, early and late finish, float dates, and duration.

G. Indicate estimated percentage of completion for each item of Work at each submission.

H. Submit separate schedule of submittal dates for shop drawings, product data, and samples, and dates reviewed submittals will be required from Architect/Engineer. Indicate decision dates for selection of finishes.

I. Revisions To Schedules:
   1. Indicate progress of each activity to date of submittal, and projected completion date of each activity.
   2. Identify activities modified since previous submittal, major changes in scope, and other identifiable changes.
   3. Prepare narrative report to define problem areas, anticipated delays, and impact on Schedule. Report corrective action taken, or proposed, and its effect including effect of changes on schedules of separate contractors.

1.4 PROPOSED PRODUCTS LIST

A. Within 15 days after date of Notice to Proceed, submit list of major products proposed for use, with name of manufacturer, trade name, and model number of each product.

B. For products specified only by reference standards, give manufacturer, trade name, model or catalog designation, and reference standards.

1.5 PRODUCT DATA

A. Product Data: Submit to Architect/Engineer for review for limited purpose of checking for conformance with information given and design concept expressed in Contract Documents.

B. Submit number of copies Contractor requires, plus 3 copies Architect/Engineer will retain.

C. Mark each copy to identify applicable products, models, options, and other data. Supplement manufacturers' standard data to provide information specific to this Project.

D. Indicate product utility and electrical characteristics, utility connection requirements, and location of utility outlets for service for functional equipment and appliances.

E. After review, produce copies and distribute in accordance with SUBMITTAL PROCEDURES article and for record documents described in Section 017000.

1.6 SHOP DRAWINGS

A. Shop Drawings: Submit to Architect/Engineer for review for limited purpose of checking for conformance with information given and design concept expressed in Contract Documents.

B. Indicate special utility and electrical characteristics, utility connection requirements, and location of utility outlets for service for functional equipment and appliances.

C. When required by individual specification sections, provide shop drawings signed and sealed by professional engineer responsible for designing components shown on shop drawings.
   1. Include signed and sealed calculations to support design.
   2. Submit drawings and calculations in form suitable for submission to and approval by authorities having jurisdiction.
   3. Make revisions and provide additional information when required by authorities having jurisdiction.

D. Submit number of opaque reproductions Contractor requires, plus 3 copies Architect/Engineer will retain.

E. After review, produce copies and distribute in accordance with SUBMITTAL PROCEDURES article and for record documents described in Section 017000.

1.7 DESIGN DATA

A. Submit for Architect/Engineer's knowledge as contract administrator or for Owner.

B. Submit for information for limited purpose of assessing conformance with information given and design concept expressed in Contract Documents.

1.8 TEST REPORTS

A. Submit for Architect/Engineer's knowledge as contract administrator or for Owner.

B. Submit test reports for information for limited purpose of assessing conformance with information given and design concept expressed in Contract Documents.

1.9 CERTIFICATES

A. When specified in individual specification sections, submit certification by manufacturer, installation/application subcontractor, or Contractor to Architect/Engineer, in quantities specified for Product Data.

B. Indicate material or product conforms to or exceeds specified requirements. Submit supporting reference data, affidavits, and certifications as appropriate.

C. Certificates may be recent or previous test results on material or Product, but must be acceptable to Architect/Engineer.

1.10 MANUFACTURER'S INSTRUCTIONS

A. When specified in individual specification sections, submit printed instructions for delivery, storage, assembly, installation, start-up, adjusting, and finishing, to Architect/Engineer for delivery to Owner in quantities specified for Product Data.

B. Indicate special procedures, perimeter conditions requiring special attention, and special environmental criteria required for application or installation.

PART 2 PRODUCTS

Not Used.

PART 3 EXECUTION

Not Used.

END OF SECTION

HURST-ROSCHE, INC.

SHOP DRAWING SUBMITTAL

PROJECT: REBID: CORRIDOR ADDITION
HILLSBORO JUNIOR HIGH SCHOOL
HILLSBORO C.U.S.D. NO. 3
HILLSBORO, MONTGOMERY COUNTY, ILLINOIS

DATE:_____

A/E PROJECT NO: 150-0738 (Rebid)

CONTRACTOR: _____

PRESENTED BY:
(Subcontractor/Supplier)

_____
Company Name

_____
Address

_____
Phone/Fax

_____
Contact Person

ITEM: _____

SPEC SECTION: _____

By approving and submitting these shop drawings, product data and samples, we represent that we have determined and verified all materials, field measurements and field construction criteria related thereto, or will do so, and that we have checked and coordinated information contained within submittal with requirements of the work and contract documents.

_____
Contractor's Signature

_____
Date

SECTION 014000 - QUALITY REQUIREMENTS

PART 1 GENERAL

1.1 SECTION INCLUDES

A. Quality control and control of installation.

B. Tolerances.

C. References.

D. Testing and inspection services.

E. Manufacturers' field services.

F. Examination.

G. Preparation.

1.2 QUALITY CONTROL AND CONTROL OF INSTALLATION

A. Monitor quality control over suppliers, manufacturers, products, services, site conditions, and workmanship, to produce Work of specified quality.

B. Comply with manufacturers' instructions, including each step in sequence.

C. When manufacturers' instructions conflict with Contract Documents, request clarification from Architect/Engineer before proceeding.

D. Comply with specified standards as minimum quality for the Work except where more stringent tolerances, codes, or specified requirements indicate higher standards or more precise workmanship.

E. Perform Work by persons qualified to produce required and specified quality.

F. Verify field measurements are as indicated on Shop Drawings or as instructed by manufacturer.

G. Secure products in place with positive anchorage devices designed and sized to withstand stresses, vibration, physical distortion, or disfigurement.

1.3 TOLERANCES

A. Monitor fabrication and installation tolerance control of products to produce acceptable Work. Do not permit tolerances to accumulate.

B. Comply with manufacturers' tolerances. When manufacturers' tolerances conflict with Contract Documents, request clarification from Architect/Engineer before proceeding.

C. Adjust products to appropriate dimensions; position before securing products in place.

1.4 REFERENCES

A. For products or workmanship specified by association, trade, or other consensus standards, comply with requirements of standard, except when more rigid requirements are specified or are required by applicable codes.

B. Conform to reference standard by date of issue current on date of Contract Documents, date for receiving bids, date of Owner-Contractor Agreement when there are no Bids, except where specific date is established by code.

C. Obtain copies of standards where required by product specification sections.

D. When specified reference standards conflict with Contract Documents, request clarification from Architect/Engineer before proceeding.

E. Neither contractual relationships, duties, nor responsibilities of parties in Contract nor those of Architect/Engineer shall be altered from Contract Documents by mention or inference otherwise in reference documents.

1.5 TESTING AND INSPECTION SERVICES

A. Requirements include:
   1. Architect/Engineer will employ and pay for testing laboratory to perform specified services.
   2. Employment of testing laboratory will in no way relieve Contractor's obligations to perform work in accord with the Contract.

B. Laboratory Duties – Limits of Authority
   1. Cooperate with Architect/Engineer and Contractor; provide qualified personnel promptly on notice.
   2. Perform specified inspections, sampling and testing of materials and construction methods:
      a. Comply with specified standards; ASTM, and other recognized authorities.
      b. Ascertain compliance with contract requirements.
      c. Obtain written acknowledgement of each inspection, sampling and test made from Contractor whose work is being tested or from his superintendent.
   3. Promptly notify Architect/Engineer and Contractor of irregularities or deficiencies of work which are observed during performance of services.
   4. Promptly submit three copies of reports of inspections and tests to Architect/Engineer, including:
      a. Date issued.
      b. Project title and number.
      c. Testing laboratory name and address.

d. Name and signature of inspector.
e. Date of inspection and sampling.
f. Record of temperature and weather.
g. Date of test.
h. Identification of product and specification section.
i. Location of project.
j. Type of inspection or test.
k. Observations regarding compliance with contract documents.

5. Perform additional services ordered by Architect/Engineer.
6. Laboratory is not authorized to:
   a. Release, revoke, alter or enlarge on, contract requirements.
   b. Approve or accept any portion of work.

B. Contractor's Responsibilities:
1. Furnish product mix design to meet or exceed contract requirements.
2. Cooperate with laboratory personnel; provide access to work and to manufacturer's operations.
   a. Monitor or direct superintendent to monitor each inspection, sampling and test.
   b. Provide laboratory with written acknowledgement of each inspection, sampling or test.
   c. Within 24 hours, notify Architect/Engineer in writing of reasons for not accepting laboratory field procedures.
3. Provide to laboratory preliminary representative samples of materials to be tested, in specified quantities.
4. Furnish copies of mill test reports.
5. Furnish verification of compliance with contract requirements for materials and equipment.
6. Furnish labor and facilities:
   a. To provide access to work to be tested.
   b. To obtain and handle samples at site.
   c. To facilitate inspections and tests.
   d. For laboratory's exclusive use for storage and curing of test samples.
7. Notify laboratory sufficiently in advance of operations to allow for its assignment of personnel and scheduling of tests.
8. Correct work which is defective or which fails to conform to the contract documents in accordance with the General Conditions. Corrective work shall not delay the project schedule or the work of other contractors.
9. Pay all costs of retesting when test results indicate non-compliance with contract requirements.
10. Patch all surfaces and areas disturbed by testing operations.

1.6 MANUFACTURERS' FIELD SERVICES

A. When specified in individual specification sections, require material or product suppliers or manufacturers to provide qualified staff personnel to observe site conditions, conditions of surfaces and installation, quality of workmanship, start-up of equipment, test, adjust and balance of equipment as applicable, and to initiate instructions when necessary.

B. Report observations and site decisions or instructions given to applicators or installers that are supplemental or contrary to manufacturers' written instructions.

PART 2 PRODUCTS

Not Used.

PART 3 EXECUTION

3.1 EXAMINATION

A. Verify existing site conditions and substrate surfaces are acceptable for subsequent Work. Beginning new Work means acceptance of existing conditions.

B. Verify existing substrate is capable of structural support or attachment of new Work being applied or attached.

C. Examine and verify specific conditions described in individual specification sections.

D. Verify utility services are available, of correct characteristics, and in correct locations.

3.2 PREPARATION

A. Clean substrate surfaces prior to applying next material or substance.

B. Seal cracks or openings of substrate prior to applying next material or substance.

C. Apply manufacturer required or recommended substrate primer, sealer, or conditioner prior to applying new material or substance in contact or bond.

END OF SECTION

SECTION 015000 - TEMPORARY FACILITIES AND CONTROLS

PART 1 GENERAL

1.1 SECTION INCLUDES

A. Temporary Utilities.

B. Construction Facilities:
1. Vehicular access.
2. Parking.
3. Progress cleaning and waste removal.

C. Temporary Controls:
1. Barriers.
2. Enclosures and fencing.
3. Water control.
4. Dust control.
5. Noise control.
6. Rodent and pest control.
7. Pollution control.

D. Removal of utilities, facilities, and controls.

1.2 TEMPORARY ELECTRICITY

A. Owner will pay cost of energy used. Exercise measures to conserve energy.

B. Permanent convenience receptacles may be utilized during construction.

1.3 TEMPORARY LIGHTING FOR CONSTRUCTION PURPOSES

A. Permanent building lighting may be utilized during construction.

1.4 TEMPORARY HEATING

A. Existing facilities shall be used.

1.5 TEMPORARY COOLING

A. Existing facilities shall be used.

1.6 TEMPORARY SANITARY FACILITIES

A. Existing facilities shall be used while school is not in session over summer break.

B. Provide and maintain required facilities and enclosures after school resumes in August. Existing facility use is not permitted while school is in session.

C. At end of construction, return existing facilities used for construction operations to same or better condition as original condition.

1.7 VEHICULAR ACCESS

A. Provide and maintain access to fire hydrants and control valves free of obstructions.

B. Provide means of removing mud from vehicle wheels before entering streets.

C. Use existing on-site roads for construction traffic.

1.8 PARKING

A. Use of existing on-site streets and driveways used for construction traffic is permitted. Tracked vehicles not allowed on paved areas.

B. Use of designated areas of existing parking facilities used by construction personnel is permitted.

C. Do not allow heavy vehicles or construction equipment in parking areas.

D. Maintenance:
   1. Maintain traffic and parking areas in sound condition free of excavated material, construction equipment, products, mud, snow, and ice.
   2. Maintain existing and permanent paved areas used for construction; promptly repair breaks, potholes, low areas, standing water, and other deficiencies, to maintain paving and drainage in original, or specified, condition.

E. Removal, Repair:
   1. Remove temporary materials and construction before Substantial Completion.
   2. Repair existing facilities damaged by use, to original condition.

F. Mud From Site Vehicles: Provide means of removing mud from vehicle wheels before entering streets.

1.9 PROGRESS CLEANING AND WASTE REMOVAL

A. Maintain areas free of waste materials, debris, and rubbish. Maintain site in clean and orderly condition.

B. Remove debris and rubbish from pipe chases, plenums, attics, crawl spaces, and other closed or remote spaces, prior to enclosing spaces.

C. Broom and vacuum clean interior areas prior to start of surface finishing, and continue cleaning to eliminate dust.

D. Collect and remove waste materials, debris, and rubbish from site periodically and dispose off-site.

1.10 BARRIERS

A. Provide barriers to prevent unauthorized entry to construction areas to allow for Owner's use of site, and to protect existing facilities and adjacent properties from damage from construction operations and demolition.

B. Protect non-owned vehicular traffic, stored materials, site, and structures from damage.

1.11 ENCLOSURES AND FENCING

A. Construction: Contractor's option.

B. Provide 6 feet high fence around construction site; equip with vehicular and pedestrian gates with locks.

C. Exterior Enclosures:
1. Provide temporary weather tight closure of exterior openings to accommodate acceptable working conditions and protection for products, to allow for temporary heating and maintenance of required ambient temperatures identified in individual specification sections, and to prevent entry of unauthorized persons. Provide access doors with self-closing hardware and locks.

1.12 WATER CONTROL

A. Grade site to drain. Maintain excavations free of water. Provide, operate, and maintain pumping equipment.

B. Protect site from puddling or running water. Provide water barriers as required to protect site from soil erosion.

1.13 DUST CONTROL

A. Execute Work by methods to minimize raising dust from construction operations.

B. Provide positive means to prevent air-borne dust from dispersing into atmosphere.

1.14 EROSION AND SEDIMENT CONTROL

A. Plan and execute construction by methods to control surface drainage from cuts and fills, from borrow and waste disposal areas. Prevent erosion and sedimentation.

B. Minimize surface area of bare soil exposed at one time.

C. Provide temporary measures including berms, dikes, and drains, and other devices to prevent water flow.

D. Construct fill and waste areas by selective placement to avoid erosive surface silts or clays.

E. Periodically inspect earthwork to detect evidence of erosion and sedimentation; promptly apply corrective measures.

1.15 NOISE CONTROL

A. Provide methods, means, and facilities to minimize noise produced by construction operations.

1.16 RODENT AND PEST CONTROL

A. Provide methods, means, and facilities to prevent rodents, pests and insects from damaging the Work.

1.17 POLLUTION CONTROL

A. Provide methods, means, and facilities to prevent contamination of soil, water, and atmosphere from discharge of noxious, toxic substances, and pollutants produced by construction operations.

B. Comply with pollution and environmental control requirements of authorities having jurisdiction.

1.18 REMOVAL OF UTILITIES, FACILITIES, AND CONTROLS

A. Remove temporary utilities, equipment, facilities, materials, prior to Substantial Completion inspection.

B. Clean and repair damage caused by installation or use of temporary work.

C. Restore existing and permanent facilities used during construction to original condition. Restore permanent facilities used during construction to specified condition.

PART 2 PRODUCTS

Not Used.

PART 3 EXECUTION

Not Used.

END OF SECTION

SECTION 016000 - PRODUCT REQUIREMENTS

PART 1 GENERAL

1.1 SECTION INCLUDES

A. Products.

B. Product delivery requirements.

C. Product storage and handling requirements.

D. Product options.

E. Product substitution procedures.

F. Equipment electrical characteristics and components.

1.2 PRODUCTS

A. Furnish products of qualified manufacturers suitable for intended use. Furnish products of each type by single manufacturer unless specified otherwise.

B. Do not use materials and equipment removed from existing premises, except as specifically permitted by Contract Documents.

C. Furnish interchangeable components from same manufacturer for components being replaced.

1.3 PRODUCT DELIVERY REQUIREMENTS

A. Transport and handle products in accordance with manufacturer's instructions.

B. Promptly inspect shipments to ensure products comply with requirements, quantities are correct, and products are undamaged.

C. Provide equipment and personnel to handle products by methods to prevent soiling, disfigurement, or damage.

1.4 PRODUCT STORAGE AND HANDLING REQUIREMENTS

A. Store and protect products in accordance with manufacturers' instructions.

B. Store with seals and labels intact and legible.

C. Store sensitive products in weather tight, climate controlled, enclosures in an environment favorable to product.

D. For exterior storage of fabricated products, place on sloped supports above ground.

E. Provide bonded off-site storage and protection when site does not permit on-site storage or protection.

F. Cover products subject to deterioration with impervious sheet covering. Provide ventilation to prevent condensation and degradation of products.

G. Store loose granular materials on solid flat surfaces in well-drained area. Prevent mixing with foreign matter.

H. Provide equipment and personnel to store products by methods to prevent soiling, disfigurement, or damage.

I. Arrange storage of products to permit access for inspection. Periodically inspect to verify products are undamaged and are maintained in acceptable condition.

1.5 PRODUCT OPTIONS

A. Products Specified by Reference Standards or by Description Only: Any product meeting those standards or description.

B. Products Specified by Naming One or More Manufacturers: Products of one of manufacturers named and meeting specifications, no options or substitutions allowed.

C. Products Specified by Naming One or More Manufacturers with Provision for Substitutions: Submit request for substitution for any manufacturer not named in accordance with the following article.

1.6 PRODUCT SUBSTITUTION PROCEDURES

A. Instructions to Bidders specify time restrictions for submitting requests for Substitutions during bidding period to requirements specified in this section.

B. Substitutions may be considered when a product becomes unavailable through no fault of Contractor.

C. Document each request with complete data substantiating compliance of proposed Substitution with Contract Documents.

D. A request constitutes a representation that Bidder:
   1. Has investigated proposed product and determined that it meets or exceeds quality level of specified product.
   2. Will provide same warranty for Substitution as for specified product.
   3. Will coordinate installation and make changes to other Work which may be required for the Work to be complete with no additional cost to Owner.
   4. Waives claims for additional costs or time extension which may subsequently become apparent.
   5. Will reimburse Owner and Architect/Engineer for review or redesign services associated with re-approval by authorities having jurisdiction.

E. Substitutions will not be considered when they are indicated or implied on Shop Drawing or Product Data submittals, without separate written request, or when acceptance will require revision to Contract Documents.

F. Substitution Submittal Procedure:
   1. Submit three copies of request for Substitution for consideration. Limit each request to one proposed Substitution.
   2. Submit Shop Drawings, Product Data, and certified test results attesting to proposed product equivalence. Burden of proof is on proposer.
   3. Architect/Engineer will notify Contractor in writing of decision to accept or reject request.

PART 2 PRODUCTS

2.1 EQUIPMENT ELECTRICAL CHARACTERISTICS AND COMPONENTS

A. Wiring Terminations: Furnish terminal lugs to match branch circuit conductor quantities, sizes, and materials indicated. Include lugs for terminal box.

B. Cord and Plug: Furnish minimum 6 foot cord and plug including grounding connector for connection to electric wiring system. Cord of longer length is specified in individual specification sections.

PART 3 EXECUTION

Not Used.

END OF SECTION

SECTION 017000 - EXECUTION AND CLOSEOUT REQUIREMENTS

PART 1 GENERAL

1.1 SECTION INCLUDES

A. Closeout procedures.

B. Final cleaning.

C. Starting of systems.

D. Demonstration and instructions.

E. Protecting installed construction.

F. Project record documents.

G. Operation and maintenance data.

H. Manual for materials and finishes.

I. Manual for equipment and systems.

J. Spare parts and maintenance products.

K. Product warranties and product bonds.

1.2 CLOSEOUT PROCEDURES

A. Submit written certification that Contract Documents have been reviewed, Work has been inspected, and that Work is complete in accordance with Contract Documents and ready for Architect/Engineer's review.

B. Provide submittals to Architect/Engineer required by authorities having jurisdiction.

C. Submit final Application for Payment identifying total adjusted Contract Sum, previous payments, and sum remaining due.

D. Provide a notarized Affidavit for Final Completion in exact text as exhibit furnished by Architect/Engineer, signed by Contractor.

E. Owner will occupy all portions of building as specified in Section 011000.

1.3 FINAL CLEANING

A. Execute final cleaning prior to final project assessment.

B. Clean interior and exterior glass, surfaces exposed to view; remove temporary labels, stains and foreign substances, polish transparent and glossy surfaces, vacuum carpeted and soft surfaces.

C. Clean equipment and fixtures to sanitary condition with cleaning materials appropriate to surface and material being cleaned.

D. Replace filters of operating equipment.

E. Clean debris from roofs, gutters, downspouts, and drainage systems.

F. Clean site; sweep paved areas, rake clean landscaped surfaces.

G. Remove waste and surplus materials, rubbish, and construction facilities from site.

1.4 STARTING OF SYSTEMS

A. Coordinate schedule for start-up of various equipment and systems.

B. Notify Architect/Engineer and Owner seven days prior to start-up of each item.

C. Verify each piece of equipment or system has been checked for proper lubrication, drive rotation, belt tension, control sequence, and for conditions which may cause damage.

D. Verify tests, meter readings, and specified electrical characteristics agree with those required by equipment or system manufacturer.

E. Verify wiring and support components for equipment are complete and tested.

F. Execute start-up under supervision of applicable manufacturer's representative in accordance with manufacturers' instructions.

G. When specified in individual specification Sections, require manufacturer to provide authorized representative to be present at site to inspect, check, and approve equipment or system installation prior to start-up, and to supervise placing equipment or system in operation.

H. Submit a written report in accordance with Section 013300 that equipment or system has been properly installed and is functioning correctly.

1.5 DEMONSTRATION AND INSTRUCTIONS

A. Demonstrate operation and maintenance of products to Owner's personnel two weeks prior to date of Substantial Completion.

B. For equipment or systems requiring seasonal operation, perform demonstration for other season within six months.

C. Utilize operation and maintenance manuals as basis for instruction. Review contents of manual with Owner's personnel in detail to explain all aspects of operation and maintenance.

D. Demonstrate start-up, operation, control, adjustment, trouble-shooting, servicing, maintenance, and shutdown of each item of equipment.

E. Prepare and insert additional data in operations and maintenance manuals when need for additional data becomes apparent during instruction.

F. Required instruction time for each item of equipment and system is specified in individual sections.

1.6 PROTECTING INSTALLED CONSTRUCTION

A. Protect installed Work and provide special protection where specified in individual specification sections.

B. Provide temporary and removable protection for installed products. Control activity in immediate work area to prevent damage.

C. Provide protective coverings at walls, projections, jambs, sills, and soffits of openings.

D. Protect finished floors, stairs, and other surfaces from traffic, dirt, wear, damage, or movement of heavy objects, by protecting with durable sheet materials.

E. Prohibit traffic or storage upon waterproofed or roofed surfaces. When traffic or activity is necessary, obtain recommendations for protection from waterproofing or roofing material manufacturer.

F. Prohibit traffic from landscaped areas.

1.7 PROJECT RECORD DOCUMENTS

A. Maintain on site one set of the following record documents; record actual revisions to the Work:
   1. Drawings.
   2. Specifications.
   3. Addenda.
   4. Change Orders and other modifications to the Contract.
   5. Reviewed Shop Drawings, Product Data, and Samples.

6. Manufacturer's instruction for assembly, installation, and adjusting.

B. Ensure entries are complete and accurate, enabling future reference by Owner.

C. Store record documents separate from documents used for construction.

D. Record information concurrent with construction progress, not less than weekly.

E. Specifications: Legibly mark and record at each product section description of actual products installed, including the following:
1. Manufacturer's name and product model and number.
2. Product substitutions or alternates utilized.
3. Changes made by Addenda and modifications.

F. Record Drawings and Shop Drawings: Legibly mark each item to record actual construction including:
1. Measured depths of foundations in relation to finish floor datum.
2. Measured horizontal and vertical locations of underground utilities and appurtenances, referenced to permanent surface improvements.
3. Measured locations of internal utilities and appurtenances concealed in construction, referenced to visible and accessible features of the Work.
4. Field changes of dimension and detail.
5. Details not on original Contract drawings.

G. Submit documents to Architect/Engineer with claim for final Application for Payment.

1.8 OPERATION AND MAINTENANCE DATA

A. Submit data bound in 8-1/2 x 11 inch (A4) text pages, three D side ring capacity expansion binders with durable plastic covers.

B. Prepare binder cover with printed title "OPERATION AND MAINTENANCE INSTRUCTIONS", title of project, and subject matter of binder when multiple binders are required.

C. Internally subdivide binder contents with permanent page dividers, logically organized as described below; with tab titling clearly printed under reinforced laminated plastic tabs.

D. Drawings: Provide with reinforced punched binder tab. Bind in with text; fold larger drawings to size of text pages.

E. Contents: Prepare Table of Contents for each volume, with each product or system description identified, typed on white paper, in three parts as follows:
   1. Part 1: Directory, listing names, addresses, and telephone numbers of Architect/Engineer, Contractor, Subcontractors, and major equipment suppliers.
   2. Part 2: Operation and maintenance instructions, arranged by system and subdivided by specification section. For each category, identify names, addresses, and telephone numbers of Subcontractors and suppliers. Identify the following:
      a. Significant design criteria.
      b. List of equipment.
      c. Parts list for each component.
      d. Operating instructions.
      e. Maintenance instructions for equipment and systems.
      f. Maintenance instructions for finishes, including recommended cleaning methods and materials, and special precautions identifying detrimental agents.
   3. Part 3: Project documents and certificates, including the following:
      a. Shop drawings and product data.
      b. Air and water balance reports.
      c. Certificates.
      d. Originals of warranties and bonds.

1.9 MANUAL FOR MATERIALS AND FINISHES

A. Submit two copies of preliminary draft or proposed formats and outlines of contents before start of Work. Architect/Engineer will review draft and return one copy with comments.

B. For equipment, or component parts of equipment put into service during construction and operated by Owner, submit documents within ten days after acceptance.

C. Submit one copy of completed volumes 15 days prior to final inspection. Draft copy be reviewed and returned after final inspection, with Architect/Engineer comments. Revise content of document sets as required prior to final submission.

D. Submit two sets of revised final volumes in final form within 10 days after final inspection.

E. Building Products, Applied Materials, and Finishes: Include product data, with catalog number, size, composition, and color and texture designations. Include information for re-ordering custom manufactured products.

F. Instructions for Care and Maintenance: Include manufacturer's recommendations for cleaning agents and methods, precautions against detrimental agents and methods, and recommended schedule for cleaning and maintenance.

G. Moisture Protection and Weather Exposed Products: Include product data listing applicable reference standards, chemical composition, and details of installation. Include recommendations for inspections, maintenance, and repair.

H. Additional Requirements: As specified in individual product specification sections.

I. Include listing in Table of Contents for design data, with tabbed fly sheet and space for insertion of data.

1.10 MANUAL FOR EQUIPMENT AND SYSTEMS

A. Submit two copies of preliminary draft or proposed formats and outlines of contents before start of Work. Architect/Engineer will review draft and return one copy with comments.

B. For equipment, or component parts of equipment put into service during construction and operated by Owner, submit documents within ten days after acceptance.

C. Submit one copy of completed volumes 15 days prior to final inspection. Draft copy be reviewed and returned after final inspection, with Architect/Engineer comments. Revise content of document sets as required prior to final submission.

D. Submit two sets of revised final volumes in final form within 10 days after final inspection.

E. Each Item of Equipment and Each System: Include description of unit or system, and component parts. Identify function, normal operating characteristics, and limiting conditions. Include performance curves, with engineering data and tests, and complete nomenclature and model number of replaceable parts.

F. Panelboard Circuit Directories: Provide electrical service characteristics, controls, and communications; typed.

G. Include color coded wiring diagrams as installed.

H. Operating Procedures: Include start-up, break-in, and routine normal operating instructions and sequences. Include regulation, control, stopping, shut-down, and emergency instructions. Include summer, winter, and special operating instructions.

I. Maintenance Requirements: Include routine procedures and guide for preventative maintenance and trouble shooting; disassembly, repair, and reassembly instructions; and alignment, adjusting, balancing, and checking instructions.

J. Include servicing and lubrication schedule, and list of lubricants required.

K. Include manufacturer's printed operation and maintenance instructions.

L. Include sequence of operation by controls manufacturer.

M. Include original manufacturer's parts list, illustrations, assembly drawings, and diagrams required for maintenance.

N. Include control diagrams by controls manufacturer as installed.

O. Include Contractor's coordination drawings, with color coded piping diagrams as installed.

P. Include charts of valve tag numbers, with location and function of each valve, keyed to flow and control diagrams.

Q. Include list of original manufacturer's spare parts, current prices, and recommended quantities to be maintained in storage.

R. Include test and balancing reports as specified in Section 014000.

S. Additional Requirements: As specified in individual product specification sections.

T. Include listing in Table of Contents for design data, with tabbed dividers and space for insertion of data.

1.11 SPARE PARTS AND MAINTENANCE PRODUCTS

A. Furnish spare parts, maintenance, and extra products in quantities specified in individual specification sections.

B. Deliver to Project site; obtain receipt prior to final payment.

1.12 PRODUCT WARRANTIES AND PRODUCT BONDS

A. Obtain warranties and bonds executed in duplicate by responsible subcontractors, suppliers, and manufacturers, within ten days after completion of applicable item of work.

B. Execute and assemble transferable warranty documents and bonds from subcontractors, suppliers, and manufacturers.

C. Verify documents are in proper form, contain full information, and are notarized.

D. Co-execute submittals when required.

E. Include Table of Contents and assemble in three D side ring binder with durable plastic cover.

F. Submit prior to final Application for Payment.

G. Time Of Submittals:

1. For equipment or component parts of equipment put into service during construction with Owner's permission, submit documents within ten days after acceptance.
2. Make other submittals within ten days after Date of Substantial Completion, prior to final Application for Payment.
3. For items of Work for which acceptance is delayed beyond Date of Substantial Completion, submit within ten days after acceptance, listing date of acceptance as beginning of warranty or bond period.

PART 2 PRODUCTS

Not Used.

PART 3 EXECUTION

Not Used.

END OF SECTION

SECTION 02 41 19 - SELECTIVE DEMOLITION

PART 1 - GENERAL

1.1 RELATED DOCUMENTS

A. Drawings and general provisions of the Contract, including General and Supplementary Conditions and Division 01 Specification Sections, apply to this Section.

1.2 SUMMARY

A. Section Includes:

1. Demolition and removal of selected portions of building or structure.
2. Demolition and removal of selected site elements.
3. Salvage of existing items to be reused or recycled.
4. Protecting items designated to remain.

1.3 DEFINITIONS

A. Remove: Detach items from existing construction and dispose of them off-site unless indicated to be salvaged or reinstalled.

B. Remove and Salvage: Detach items from existing construction, in a manner to prevent damage, and deliver to Owner ready for reuse.

C. Remove and Reinstall: Detach items from existing construction, in a manner to prevent damage, prepare for reuse, and reinstall where indicated.

D. Existing to Remain: Leave existing items that are not to be removed and that are not otherwise indicated to be salvaged or reinstalled.

1.4 MATERIALS OWNERSHIP

A. Unless otherwise indicated, demolition waste becomes property of Contractor.

B. Historic items, relics, antiques, and similar objects including, but not limited to, cornerstones and their contents, commemorative plaques and tablets, and other items of interest or value to Owner that may be uncovered during demolition remain the property of Owner.

1. Carefully salvage in a manner to prevent damage and promptly return to Owner.

1.5 INFORMATIONAL SUBMITTALS

A. Proposed Protection Measures: Submit report, including Drawings, that indicates the measures proposed for protecting individuals and property, for dust control and, for noise control. Indicate proposed locations and construction of barriers.

1.6 CLOSEOUT SUBMITTALS

A. Inventory: Submit a list of items that have been removed and salvaged.

B. Project Record Documents: Accurately record actual locations of capped utilities, concealed utilities discovered during demolition, and subsurface obstructions.

1.7 QUALITY ASSURANCE

A. Conform to applicable code for demolition work, dust control, and products requiring electrical disconnection and reconnection.

B. Conform to applicable code for procedures when hazardous or contaminated materials are discovered.

C. Obtain required permits from authorities having jurisdiction.

1.8 FIELD CONDITIONS

A. Owner will occupy portions of building immediately adjacent to selective demolition area. Conduct selective demolition so Owner's operations will not be disrupted.

B. Notify Architect of discrepancies between existing conditions and Drawings before proceeding with selective demolition.

C. Hazardous Materials: It is not expected that hazardous materials will be encountered in the Work.

1. If suspected hazardous materials are encountered, do not disturb; immediately notify Architect and Owner. Hazardous materials will be removed by Owner under a separate contract.

D. Storage or sale of removed items or materials on-site is not permitted.

E. Utility Service: Maintain existing utilities indicated to remain in service and protect them against damage during selective demolition operations.

1. Maintain fire-protection facilities in service during selective demolition operations.

F. Cease operations immediately if structure appears to be in danger and notify Architect/Engineer. Do not resume operations until directed.

1.9 COORDINATION

A. Arrange selective demolition schedule so as not to interfere with Owner's operations.

PART 2 - PRODUCTS

2.1 PERFORMANCE REQUIREMENTS

A. Regulatory Requirements: Comply with governing EPA notification regulations before beginning selective demolition. Comply with hauling and disposal regulations of authorities having jurisdiction.

B. Standards: Comply with ASSE A10.6 and NFPA 241.

PART 3 - EXECUTION

3.1 PREPARATION

A. Notify affected utility companies before starting work and comply with their requirements.

B. Mark location and termination of utilities.

C. Erect, and maintain temporary barriers and security devices, including warning signs and lights, and similar measures, for protection of the public, Owner, and existing improvements indicated to remain.

D. Erect and maintain temporary partitions to prevent spread of dust, odors, and noise to permit continued Owner occupancy.

E. Provide appropriate temporary signage including signage for exit or building egress.

F. Do not close or obstruct building egress path.

G. Do not disable or disrupt building fire or life safety systems without 3 days prior written notice to Owner.

3.2 SALVAGE REQUIREMENTS

A. Coordinate with Owner to identify building components and equipment required to be removed and delivered to Owner.

B. Tag components and equipment Owner designates for salvage.

C. Protect designated salvage items from demolition operations until items can be removed.

D. Carefully remove building components and equipment indicated to be salvaged.

E. Disassemble as required to permit removal from building.

F. Package small and loose parts to avoid loss.

G. Mark equipment and packaged parts to permit identification and consolidation of components of each salvaged item.

H. Prepare assembly instructions consistent with disassembled parts. Package assembly instructions in protective envelope and securely attach to each disassembled salvaged item.

I. Deliver salvaged items to Owner. Obtain signed receipt from Owner.

3.3 UTILITY SERVICES AND MECHANICAL/ELECTRICAL SYSTEMS

A. Existing Services/Systems to Remain: Maintain services/systems indicated to remain and protect them against damage.

B. Existing Services/Systems to Be Removed, Relocated, or Abandoned: Locate, identify, disconnect, and seal or cap off utility services and mechanical/electrical systems serving areas to be selectively demolished.

1. Arrange to shut off utilities with utility companies.
2. If services/systems are required to be removed, relocated, or abandoned, provide temporary services/systems that bypass area of selective demolition and that maintain continuity of services/systems to other parts of building.
3. Disconnect, demolish, and remove fire-suppression systems, plumbing, and HVAC systems, equipment, and components indicated on Drawings to be removed.

    a. Piping to Be Removed: Remove portion of piping indicated to be removed and cap or plug remaining piping with same or compatible piping material.
    b. Piping to Be Abandoned in Place: Drain piping and cap or plug piping with same or compatible piping material and leave in place.
    c. Equipment to Be Removed: Disconnect and cap services and remove equipment.
    d. Equipment to Be Removed and Reinstalled: Disconnect and cap services and remove, clean, and store equipment; when appropriate, reinstall, reconnect, and make equipment operational.
    e. Equipment to Be Removed and Salvaged: Disconnect and cap services and remove equipment and deliver to Owner.
    f. Ducts to Be Removed: Remove portion of ducts indicated to be removed and plug remaining ducts with same or compatible ductwork material.
    g. Ducts to Be Abandoned in Place: Cap or plug ducts with same or compatible ductwork material and leave in place.

3.4 SELECTIVE DEMOLITION, GENERAL

A. General: Demolish and remove existing construction only to the extent required by new construction and as indicated. Use methods required to complete the Work within limitations of governing regulations and as follows:

1. Proceed with selective demolition systematically, from higher to lower level. Complete selective demolition operations above each floor or tier before disturbing supporting members on the next lower level.
2. Neatly cut openings and holes plumb, square, and true to dimensions required. Use cutting methods least likely to damage construction to remain or adjoining construction. Use hand tools or small power tools designed for sawing or grinding, not hammering and chopping. Temporarily cover openings to remain.
3. Cut or drill from the exposed or finished side into concealed surfaces to avoid marring existing finished surfaces.
4. Do not use cutting torches until work area is cleared of flammable materials. At concealed spaces, such as duct and pipe interiors, verify condition and contents of hidden space before starting flame-cutting operations. Maintain portable fire-suppression devices during flame-cutting operations.
5. Maintain fire watch during and for at least two hours after flame-cutting operations.
6. Maintain adequate ventilation when using cutting torches.
7. Remove decayed, vermin-infested, or otherwise dangerous or unsuitable materials and promptly dispose of off-site.
8. Remove structural framing members and lower to ground by method suitable to avoid free fall and to prevent ground impact or dust generation.
9. Locate selective demolition equipment and remove debris and materials so as not to impose excessive loads on supporting walls, floors, or framing.
10. Dispose of demolished items and materials promptly.

B. Site Access and Temporary Controls: Conduct selective demolition and debris-removal operations to ensure minimum interference with roads, streets, walks, walkways, and other adjacent occupied and used facilities.

C. Removed and Salvaged Items:

1. Clean salvaged items.
2. Pack or crate items after cleaning. Identify contents of containers.
3. Store items in a secure area until delivery to Owner.
4. Transport items to Owner's storage area designated by Owner.
5. Protect items from damage during transport and storage.

D. Removed and Reinstalled Items:

1. Clean and repair items to functional condition adequate for intended reuse.
2. Pack or crate items after cleaning and repairing. Identify contents of containers.
3. Protect items from damage during transport and storage.
4. Reinstall items in locations indicated. Comply with installation requirements for new materials and equipment. Provide connections, supports, and miscellaneous materials necessary to make item functional for use indicated.

E. Existing Items to Remain: Protect construction indicated to remain against damage and soiling during selective demolition. When permitted by Architect, items may be removed to a suitable, protected storage location during selective demolition and cleaned and reinstalled in their original locations after selective demolition operations are complete.

3.5 SELECTIVE DEMOLITION PROCEDURES FOR SPECIFIC MATERIALS

A. Concrete: Demolish in small sections. Using power-driven saw, cut concrete to a depth of at least 3/4 inch at junctures with construction to remain. Dislodge concrete from reinforcement at perimeter of areas being demolished, cut reinforcement, and then remove remainder of concrete. Neatly trim openings to dimensions indicated.

B. Concrete: Demolish in sections. Cut concrete full depth at junctures with construction to remain and at regular intervals using power-driven saw, and then remove concrete between saw cuts.

C. Masonry: Demolish in small sections. Cut masonry at junctures with construction to remain, using power-driven saw, and then remove masonry between saw cuts.

D. Concrete Slabs-on-Grade: Saw-cut perimeter of area to be demolished, and then break up and remove.

3.6 DISPOSAL OF DEMOLISHED MATERIALS

A. Remove demolition waste materials from Project site and dispose of them in an EPA-approved construction and demolition waste landfill acceptable to authorities having jurisdiction.

1. Do not allow demolished materials to accumulate on-site.
2. Remove and transport debris in a manner that will prevent spillage on adjacent surfaces and areas.

B. Burning: Do not burn demolished materials.

3.7 CLEANING

A. Clean adjacent structures and improvements of dust, dirt, and debris caused by selective demolition operations. Return adjacent areas to condition existing before selective demolition operations began.

END OF SECTION

SECTION 03 30 00 - CAST-IN-PLACE CONCRETE

PART 1 - GENERAL

1.1 SUMMARY

A. Section includes cast-in-place concrete, including formwork, reinforcement, concrete materials, mixture design, placement procedures, and finishes.

B. Related Requirements:

1. Section 32 11 23 – Aggregate Base Course - Drainage fill under slabs-on-grade.
2. Section 32 13 13 – Concrete Paving - Concrete pavement and walks.

1.2 DEFINITIONS

A. Cementitious Materials: Portland cement alone or in combination with one or more of the following: blended hydraulic cement, fly ash, slag cement, other pozzolans, and silica fume; materials subject to compliance with requirements.

B. W/C Ratio: The ratio by weight of water to cementitious materials.

1.3 PREINSTALLATION MEETINGS

A. Preinstallation Conference: Conduct conference at Project site.

1. Before submitting design mixtures, review concrete design mixture and examine procedures for ensuring quality of concrete materials. Require representatives of each entity directly concerned with cast-in-place concrete to attend, including the following:

   a. Contractor's superintendent.
   b. Independent testing agency responsible for concrete design mixtures.
   c. Ready-mix concrete manufacturer.
   d. Concrete Subcontractor.
   e. Architect/Engineer.

2. Review special inspection and testing and inspecting agency procedures for field quality control, concrete finishes and finishing, cold- and hot-weather concreting procedures, curing procedures, construction contraction and isolation joints, and joint-filler strips, semirigid joint fillers, forms and form removal limitations, shoring and reshoring procedures, vapor-retarder installation, anchor rod and anchorage device installation tolerances, steel reinforcement installation, methods for achieving specified floor and slab flatness and levelness floor and slab flatness and levelness measurement, concrete repair procedures, and concrete protection.

1.4 ACTION SUBMITTALS

A. Product Data: For each type of product.

B. Design Mixtures: For each concrete mixture. Submit alternate design mixtures when characteristics of materials, Project conditions, weather, test results, or other circumstances warrant adjustments.

1. Indicate amounts of mixing water to be withheld for later addition at Project site.

C. Steel Reinforcement Shop Drawings: Placing Drawings that detail fabrication, bending, and placement. Include bar sizes, lengths, material, grade, bar schedules, stirrup spacing, bent bar diagrams, bar arrangement, splices and laps, mechanical connections, tie spacing, hoop spacing, and supports for concrete reinforcement.

D. Construction Joint Layout: Indicate proposed construction joints required to construct the structure.

1. Location of construction joints is subject to approval of the Architect.

E. Samples: For vapor retarder.

1.5 INFORMATIONAL SUBMITTALS

A. Qualification Data: For Installer and manufacturer.

B. Welding certificates.

C. Material Certificates: For each of the following, signed by manufacturers:

1. Cementitious materials.
2. Admixtures.
3. Form materials and form-release agents.
4. Steel reinforcement and accessories.
5. Curing compounds.
6. Floor and slab treatments.
7. Bonding agents.
8. Adhesives.
9. Vapor retarders.
10. Semirigid joint filler.
11. Joint-filler strips.
12. Repair materials.

D. Material Test Reports: For the following, from a qualified testing agency:

1. Aggregates**:** Include service record data indicating absence of deleterious expansion of concrete due to alkali aggregate reactivity.

E. Minutes of preinstallation conference.

1.6 QUALITY ASSURANCE

A. Installer Qualifications: A qualified installer who employs on Project personnel qualified as ACI-certified Flatwork Technician and Finisher and a supervisor who is an ACI-certified Concrete Flatwork Technician.

B. Manufacturer Qualifications: A firm experienced in manufacturing ready-mixed concrete products and that complies with ASTM C 94/C 94M requirements for production facilities and equipment.

   1. Manufacturer certified according to NRMCA's "Certification of Ready Mixed Concrete Production Facilities."

C. Welding Qualifications: Qualify procedures and personnel according to AWS D1.4/D 1.4M.

1.7 PRECONSTRUCTION TESTING

A. Preconstruction Testing Service: Engage a qualified testing agency to perform preconstruction testing on concrete mixtures.

1.8 DELIVERY, STORAGE, AND HANDLING

A. Steel Reinforcement: Deliver, store, and handle steel reinforcement to prevent bending and damage.

1.9 FIELD CONDITIONS

A. Cold-Weather Placement: Comply with ACI 306.1 and as follows. Protect concrete work from physical damage or reduced strength that could be caused by frost, freezing actions, or low temperatures.

   1. When average high and low temperature is expected to fall below 40 deg F for three successive days, maintain delivered concrete mixture temperature within the temperature range required by ACI 301.
   2. Do not use frozen materials or materials containing ice or snow. Do not place concrete on frozen subgrade or on subgrade containing frozen materials.
   3. Do not use calcium chloride, salt, or other materials containing antifreeze agents or chemical accelerators unless otherwise specified and approved in mixture designs.

B. Hot-Weather Placement: Comply with ACI 301 and as follows:

   1. Maintain concrete temperature below 90 deg F (32 deg C) at time of placement. Chilled mixing water or chopped ice may be used to control temperature, provided water equivalent of ice is calculated to total amount of mixing water. Using liquid nitrogen to cool concrete is Contractor's option.
   2. Fog-spray forms, steel reinforcement, and subgrade just before placing concrete. Keep subgrade uniformly moist without standing water, soft spots, or dry areas.

PART 2 - PRODUCTS

2.1 CONCRETE, GENERAL

A. ACI Publications: Comply with the following unless modified by requirements in the Contract Documents:

1. ACI 301
2. ACI 117
3. ACI 318
4. ACI 305.1
5. ACI 306.1
6. ACI 308.1

2.2 STEEL REINFORCEMENT

A. Reinforcing Bars: ASTM A 615, Grade 60, deformed.

B. Plain-Steel Welded-Wire Reinforcement: ASTM A 1064, plain, fabricated from as-drawn steel wire into flat sheets.

2.3 REINFORCEMENT ACCESSORIES

A. Joint Dowel Bars: ASTM A 615, Grade 60 (Grade 420), plain-steel bars, cut true to length with ends square and free of burrs.

B. Bar Supports: Bolsters, chairs, spacers, and other devices for spacing, supporting, and fastening reinforcing bars and welded-wire reinforcement in place. Manufacture bar supports from steel wire, plastic, or precast concrete according to CRSI's "Manual of Standard Practice," of greater compressive strength than concrete and as follows:

1. For concrete surfaces exposed to view, where legs of wire bar supports contact forms, use CRSI Class 1 plastic-protected steel wire or CRSI Class 2 stainless-steel bar supports.

2.4 CONCRETE MATERIALS

A. Source Limitations: Obtain each type or class of cementitious material of the same brand from the same manufacturer's plant, obtain aggregate from single source, and obtain admixtures from single source from single manufacturer.

B. Cementitious Materials:

1. Portland Cement: ASTM C 150, Type I.
2. Fly Ash: ASTM C 618, Class F or C.
3. Slag Cement: ASTM C 989, Grade 100 or 120.
4. Blended Hydraulic Cement: ASTM C 595, Type IS, Portland blast-furnace slag cement.
5. Silica Fume: ASTM C 1240, amorphous silica.

C. Normal-Weight Aggregates: ASTM C 33, Class 3S coarse aggregate or better, graded. Provide aggregates from a single source.

1. Maximum Coarse-Aggregate Size: In accordance with ACI 318.
2. Fine Aggregate: Free of materials with deleterious reactivity to alkali in cement.

D. Air-Entraining Admixture: ASTM C 260.

E. Chemical Admixtures: Certified by manufacturer to be compatible with other admixtures and that do not contribute water-soluble chloride ions exceeding those permitted in hardened concrete. Do not use calcium chloride or admixtures containing calcium chloride.

1. Water-Reducing Admixture: ASTM C 494, Type A.
2. Retarding Admixture: ASTM C 494, Type B.
3. Water-Reducing and Retarding Admixture: ASTM C 494, Type D.

F. Color Pigment: ASTM C 979/C 979M, synthetic mineral-oxide pigments or colored water-reducing admixtures; color stable, free of carbon black, nonfading, and resistant to lime and other alkalis.

1. Integral Color Admixture (Liquid Coloring Agent):
   a. Chromix L by LM Scofield.
   b. Color Flo Liquid Color by Solomon Colors.
2. Color: As selected by Architect / Engineer from manufacturer's full range.

G. Water: ASTM C 94/C 94M and potable.

2.5 VAPOR RETARDERS

A. Sheet Vapor Retarder: ASTM E 1745, Class A, maximum water-vapor permeance of minimum thickness of 10 mil; type recommended for below grade application. Include manufacturer's recommended adhesive or pressure-sensitive tape.

2.6 NON-SHRINK GROUT

A. ASTM C 1107; premixed compound consisting of non-metallic aggregate, cement, water reducing and plasticizing agent; capable of developing minimum compressive strength of 2,400 psi in 48 hours and 7,000 psi in 28 days.

2.7 CURING MATERIALS

A. Evaporation Retarder: Waterborne, monomolecular film forming, manufactured for application to fresh concrete.

B. Absorptive Cover: AASHTO M 182, Class 2, burlap cloth made from jute or kenaf, weighing approximately 9 oz./sq. yd. when dry.

C. Moisture-Retaining Cover: ASTM C 171, polyethylene film or white burlap-polyethylene sheet.

D. Water: Potable.

2.8 RELATED MATERIALS

A. Expansion- and Isolation-Joint-Filler Strips: ASTM D 1751, asphalt-saturated cellulosic fiber.

B. Bonding Agent: ASTM C 1059, Type II, nonredispersible, acrylic emulsion or styrene butadiene.

C. Epoxy Bonding Adhesive: ASTM C 881, two-component epoxy resin, capable of humid curing and bonding to damp surfaces, of class suitable for application temperature and of grade to suit requirements, and as follows:

1. Types I and II, nonload bearing, Types IV and V, load bearing, for bonding hardened or freshly mixed concrete to hardened concrete.

2.9 REPAIR MATERIALS

A. Repair Underlayment: Cement-based, polymer-modified, self-leveling product that can be applied in thicknesses from 1/8 inch and that can be feathered at edges to match adjacent floor elevations.

1. Cement Binder: ASTM C 150, Portland cement or hydraulic or blended hydraulic cement as defined in ASTM C 219.
2. Primer: Product of underlayment manufacturer recommended for substrate, conditions, and application.
3. Aggregate: Well-graded, washed gravel, 1/8 to 1/4 inch or coarse sand as recommended by underlayment manufacturer.
4. Compressive Strength: Not less than 4000 psi at 28 days when tested according to ASTM C 109/C 109M.

2.10 CONCRETE MIXTURES, GENERAL

A. Prepare design mixtures for each type and strength of concrete, proportioned on the basis of laboratory trial mixture or field test data, or both, according to ACI 301.

B. Admixtures: Use admixtures according to manufacturer's written instructions.

1. Use water-reducing admixture in concrete, as required, for placement and workability.
2. Use water-reducing and -retarding admixture when required by high temperatures, low humidity, or other adverse placement conditions.
3. Use water-reducing admixture in pumped concrete, concrete for heavy-use industrial slabs and parking structure slabs, concrete required to be watertight, and concrete with a w/c ratio below 0.50.

C. Color Pigment: Add color pigment to concrete mixture according to manufacturer's written instructions and to result in hardened concrete color consistent with approved sample.

2.11 CONCRETE MIXTURES FOR BUILDING ELEMENTS

A. Footings: Normal-weight concrete.

1. Minimum Compressive Strength: 4000 psi at 28 days.
2. Slump Limit: 4 inches, plus or minus 1 inch.
3. Air Content: 5.5 percent, plus or minus 1.5 percent at point of delivery for 1-1/2-inch (maximum aggregate size.
4. Air Content: 6 percent, plus or minus 1.5 percent at point of delivery for 3/4-inch nominal maximum aggregate size.

B. Slabs-on-Grade: Normal-weight concrete.

1. Minimum Compressive Strength: 4000 psi at 28 days.
2. Slump Limit: 4 inches, plus or minus 1 inch.
3. Air Content: 5.5 percent, plus or minus 1.5 percent at point of delivery for 1-1/2-inch nominal maximum aggregate size.
4. Air Content: 6 percent, plus or minus 1.5 percent at point of delivery for 3/4-inch nominal maximum aggregate size.
5. Air Content: Do not allow air content of trowel-finished floors to exceed 3 percent.

2.12 FABRICATING REINFORCEMENT

A. Fabricate steel reinforcement according to CRSI's "Manual of Standard Practice."

2.13 CONCRETE MIXING

A. Ready-Mixed Concrete: Measure, batch, mix, and deliver concrete according to ASTM C 94, and furnish batch ticket information.

1. When air temperature is between 85 and 90 deg F, reduce mixing and delivery time from 1-1/2 hours to 75 minutes; when air temperature is above 90 deg F, reduce mixing and delivery time to 60 minutes.

B. Project-Site Mixing: Measure, batch, and mix concrete materials and concrete according to ASTM C 94. Mix concrete materials in appropriate drum-type batch machine mixer.

1. For mixer capacity of 1 cu. yd. or smaller, continue mixing at least 1-1/2 minutes, but not more than 5 minutes after ingredients are in mixer, before any part of batch is released.
2. For mixer capacity larger than 1 cu. yd., increase mixing time by 15 seconds for each additional 1 cu. yd.
3. Provide batch ticket for each batch discharged and used in the Work, indicating Project identification name and number, date, mixture type, mixture time, quantity, and amount of water added. Record approximate location of final deposit in structure.

PART 3 - EXECUTION

3.1 FORMWORK INSTALLATION

A. Design, erect, shore, brace, and maintain formwork, according to ACI 301, to support vertical, lateral, static, and dynamic loads, and construction loads that might be applied, until structure can support such loads.

B. Construct formwork so concrete members and structures are of size, shape, alignment, elevation, and position indicated, within tolerance limits of ACI 117.

C. Limit concrete surface irregularities, designated by ACI 347 as abrupt or gradual, as follows:

1. Class A, 1/8 inch for smooth-formed finished surfaces.
2. Class C, 1/2 inch for rough-formed finished surfaces.

D. Construct forms tight enough to prevent loss of concrete mortar.

E. Construct forms for easy removal without hammering or prying against concrete surfaces. Provide crush or wrecking plates where stripping may damage cast-concrete surfaces. Provide top forms for inclined surfaces steeper than 1.5 horizontal to 1 vertical.

1. Install keyways, reglets, recesses, and the like, for easy removal.
2. Do not use rust-stained steel form-facing material.

F. Set edge forms, bulkheads, and intermediate screed strips for slabs to achieve required elevations and slopes in finished concrete surfaces. Provide and secure units to support screed strips; use strike-off templates or compacting-type screeds.

G. Provide temporary openings for cleanouts and inspection ports where interior area of formwork is inaccessible. Close openings with panels tightly fitted to forms and securely braced to prevent loss of concrete mortar. Locate temporary openings in forms at inconspicuous locations.

H. Chamfer exterior corners and edges of permanently exposed concrete.

I. Form openings, chases, offsets, sinkages, keyways, reglets, blocking, screeds, and bulkheads required in the Work. Determine sizes and locations from trades providing such items.

J. Clean forms and adjacent surfaces to receive concrete. Remove chips, wood, sawdust, dirt, and other debris just before placing concrete.

K. Retighten forms and bracing before placing concrete, as required, to prevent mortar leaks and maintain proper alignment.

L. Coat contact surfaces of forms with form-release agent, according to manufacturer's written instructions, before placing reinforcement.

3.2 EMBEDDED ITEM INSTALLATION

A. Place and secure anchorage devices and other embedded items required for adjoining work that is attached to or supported by cast-in-place concrete. Use setting drawings, templates, diagrams, instructions, and directions furnished with items to be embedded.

1. Install anchor rods, accurately located, to elevations required and complying with tolerances in Section 7.5 of AISC 303.
2. Install dovetail anchor slots in concrete structures as indicated.

3.3 REMOVING AND REUSING FORMS

A. General: Formwork for sides of beams, walls, columns, and similar parts of the Work that does not support weight of concrete may be removed after cumulatively curing at not less than 50 deg F for 24 hours after placing concrete. Concrete has to be hard enough to not be damaged by form-removal operations, and curing and protection operations need to be maintained.

1. Leave formwork for beam soffits, joists, slabs, and other structural elements that support weight of concrete in place until concrete has achieved at least 70 percent of its 28-day design compressive strength.
2. Remove forms only if shores have been arranged to permit removal of forms without loosening or disturbing shores.

B. Clean and repair surfaces of forms to be reused in the Work. Split, frayed, delaminated, or otherwise damaged form-facing material are not acceptable for exposed surfaces. Apply new form-release agent.

C. When forms are reused, clean surfaces, remove fins and laitance, and tighten to close joints. Align and secure joints to avoid offsets. Do not use patched forms for exposed concrete surfaces unless approved by Architect.

3.4 SHORING AND RESHORING INSTALLATION

A. Comply with ACI 318 and ACI 301 for design, installation, and removal of shoring and reshoring.

1. Do not remove shoring or reshoring until measurement of slab tolerances is complete.

B. Plan sequence of removal of shores and reshore to avoid damage to concrete. Locate and provide adequate reshoring to support construction without excessive stress or deflection.

3.5 VAPOR-RETARDER INSTALLATION

A. Sheet Vapor Retarders: Place, protect, and repair sheet vapor retarder according to ASTM E 1643 and manufacturer's written instructions.

1. Lap joints 6 inches and seal with manufacturer's recommended tape.

3.6 STEEL REINFORCEMENT INSTALLATION

A. General: Comply with CRSI's "Manual of Standard Practice" for fabricating, placing, and supporting reinforcement.

1. Do not cut or puncture vapor retarder. Repair damage and reseal vapor retarder before placing concrete.

B. Clean reinforcement of loose rust and mill scale, earth, ice, and other foreign materials that reduce bond to concrete.

C. Accurately position, support, and secure reinforcement against displacement. Locate and support reinforcement with bar supports to maintain minimum concrete cover. Do not tack weld crossing reinforcing bars.

D. Set wire ties with ends directed into concrete, not toward exposed concrete surfaces.

E. Install welded-wire reinforcement in longest practicable lengths on bar supports spaced to minimize sagging. Lap edges and ends of adjoining sheets at least one mesh spacing. Offset laps of adjoining sheet widths to prevent continuous laps in either direction. Lace overlaps with wire.

3.7 JOINTS

A. General: Construct joints true to line with faces perpendicular to surface plane of concrete.

B. Construction Joints: Install so strength and appearance of concrete are not impaired, at locations indicated or as approved by Architect / Engineer.

1. Place joints perpendicular to main reinforcement. Continue reinforcement across construction joints unless otherwise indicated. Do not continue reinforcement through sides of strip placements of floors and slabs.
2. Use a bonding agent at locations where fresh concrete is placed against hardened or partially hardened concrete surfaces.

C. Contraction Joints in Slabs-on-Grade: Form weakened-plane contraction joints, sectioning concrete into areas as indicated. Construct contraction joints for a depth equal to at least one-fourth of concrete thickness as follows:

1. Sawed Joints: Form contraction joints with power saws equipped with shatterproof abrasive or diamond-rimmed blades. Cut 1/8-inch wide joints into concrete when cutting action does not tear, abrade, or otherwise damage surface and before concrete develops random contraction cracks.

a. For integral colored concrete, after saw cutting, immediately vacuum up and clean residues.

D. Isolation Joints in Slabs-on-Grade: After removing formwork, install joint-filler strips at slab junctions with vertical surfaces, such as column pedestals, foundation walls, grade beams, and other locations, as indicated.

1. Extend joint-filler strips full width and depth of joint, terminating flush with finished concrete surface unless otherwise indicated.
2. Terminate full-width joint-filler strips not less than 1/2 inch or more than 1 inch below finished concrete surface where joint sealants, specified in Section 079200 "Joint Sealants," are indicated.
3. Install joint-filler strips in lengths as long as practicable. Where more than one length is required, lace or clip sections together.

E. Doweled Joints: Install dowel bars and support assemblies at joints where indicated. Lubricate or asphalt coat one-half of dowel length to prevent concrete bonding to one side of joint.

3.8 CONCRETE PLACEMENT

A. Before placing concrete, verify that installation of formwork, reinforcement, and embedded items is complete and that required inspections are completed.

B. Do not add water to concrete during delivery, at Project site, or during placement unless approved by Architect.

C. Before test sampling and placing concrete, water may be added at Project site, subject to limitations of ACI 301.

1. Do not add water to concrete after adding high-range water-reducing admixtures to mixture.

D. Deposit concrete continuously in one layer or in horizontal layers of such thickness that no new concrete is placed on concrete that has hardened enough to cause seams or planes of weakness. If a section cannot be placed continuously, provide construction joints as indicated. Deposit concrete to avoid segregation.

1. Deposit concrete in horizontal layers of depth not to exceed formwork design pressures and in a manner to avoid inclined construction joints.
2. Consolidate placed concrete with mechanical vibrating equipment according to ACI 301.
3. Do not use vibrators to transport concrete inside forms. Insert and withdraw vibrators vertically at uniformly spaced locations to rapidly penetrate placed layer and at least 6 inches into preceding layer. Do not insert vibrators into lower layers of concrete that have begun to lose plasticity. At each insertion, limit duration of vibration to time necessary to consolidate concrete and complete embedment of reinforcement and other embedded items without causing mixture constituents to segregate.

E. Deposit and consolidate concrete for floors and slabs in a continuous operation, within limits of construction joints, until placement of a panel or section is complete.

1. Consolidate concrete during placement operations, so concrete is thoroughly worked around reinforcement and other embedded items and into corners.
2. Maintain reinforcement in position on chairs during concrete placement.
3. Screed slab surfaces with a straightedge and strike off to correct elevations.
4. Slope surfaces uniformly to drains where required.

5. Begin initial floating using bull floats or darbies to form a uniform and open-textured surface plane, before excess bleedwater appears on the surface. Do not further disturb slab surfaces before starting finishing operations.

3.9 FINISHING FORMED SURFACES

A. Rough-Formed Finish: As-cast concrete texture imparted by form-facing material with tie holes and defects repaired and patched. Remove fins and other projections that exceed specified limits on formed-surface irregularities.

1. Apply to concrete surfaces not exposed to public view.

B. Smooth-Formed Finish: As-cast concrete texture imparted by form-facing material, arranged in an orderly and symmetrical manner with a minimum of seams. Repair and patch tie holes and defects. Remove fins and other projections that exceed specified limits on formed-surface irregularities.

1. Apply to concrete surfaces exposed to public view, to receive a rubbed finish, or to be covered with a coating or covering material applied directly to concrete.
2. Use set retarding admixtures during hot weather.

C. Rubbed Finish: Apply the following to smooth-formed-finished as-cast concrete where indicated:

1. Smooth-Rubbed Finish: Not later than one day after form removal, moisten concrete surfaces and rub with carborundum brick or another abrasive until producing a uniform color and texture. Do not apply cement grout other than that created by the rubbing process.

D. Related Unformed Surfaces: At tops of walls, horizontal offsets, and similar unformed surfaces adjacent to formed surfaces, strike off smooth and finish with a texture matching adjacent formed surfaces. Continue final surface treatment of formed surfaces uniformly across adjacent unformed surfaces unless otherwise indicated.

3.10 FINISHING FLOORS AND SLABS

A. General: Comply with ACI 302.1R recommendations for screeding, restraightening, and finishing operations for concrete surfaces. Do not wet concrete surfaces.

B. Trowel Finish: After applying float finish, apply first troweling and consolidate concrete by hand or power-driven trowel. Continue troweling passes and restraighten until surface is free of trowel marks and uniform in texture and appearance. Grind smooth any surface defects that would telegraph through applied coatings or floor coverings.

1. Apply a trowel finish to surfaces exposed to view or to be covered with resilient flooring, carpet, ceramic or quarry tile set over a cleavage membrane, paint, or another thin-film-finish coating system.
2. Finish surfaces to the following tolerances, according to ASTM E 1155, for a randomly trafficked floor surface:

   a. Specified overall values of flatness, F(F) 35; and of levelness, F(L) 25; with minimum local values of flatness, F(F) 24; and of levelness, F(L) 17; for slabs-on-grade.

3. Finish and measure surface, so gap at any point between concrete surface and an unleveled, freestanding, 10-foot. long straightedge resting on two high spots and placed anywhere on the surface does not exceed 3/16 inch.

C. Additional Integral Colored Floor Troweling Requirements:
1. Final troweling shall be performed with finish blades.
2. Finish blades shall be new or used steel finish blades that are in good shape.
3. Trowel as many times as possible.

D. Slip-Resistive Finish for Integrally Colored Floor: Before final floating, apply slip-resistive aluminum granule finish where indicated and to concrete stair treads, platforms, and ramps. Apply according to manufacturer's written instructions and as follows:

1. Uniformly spread 25 pounds per 100 square feet of dampened slip-resistive aluminum granules over surface in one or two applications. Tamp aggregate flush with surface, but do not force below surface.
2. After broadcasting and tamping, apply float finish.
3. After curing, lightly work surface with a steel wire brush or an abrasive stone and water to expose slip-resistive aluminum granules.

E. In areas with floor drains, maintain floor elevation at walls; pitch surfaces uniformly to drains as indicated in drawings.

3.11 MISCELLANEOUS CONCRETE ITEM INSTALLATION

A. Filling In: Fill in holes and openings left in concrete structures after work of other trades is in place unless otherwise indicated. Mix, place, and cure concrete, as specified, to blend with in-place construction. Provide other miscellaneous concrete filling indicated or required to complete the Work.

3.12 CONCRETE PROTECTING AND CURING

A. General: Protect freshly placed concrete from premature drying and excessive cold or hot temperatures. Comply with ACI 306.1 for cold-weather protection and ACI 301 for hot-weather protection during curing.

B. Evaporation Retarder: Apply evaporation retarder to unformed concrete surfaces if hot, dry, or windy conditions cause moisture loss approaching 0.2 lb/sq. ft. x h before and during finishing operations. Apply according to manufacturer's written instructions after placing, screeding, and bull floating or darbying concrete, but before float finishing.

C. Formed Surfaces: Cure formed concrete surfaces, including underside of beams, supported slabs, and other similar surfaces. If forms remain during curing period, moist cure after loosening forms. If removing forms before end of curing period, continue curing for remainder of curing period.

D. Unformed Surfaces: Begin curing immediately after finishing concrete. Cure unformed surfaces, including floors and slabs, concrete floor toppings, and other surfaces.

E. Cure concrete according to ACI 308.1, by one or a combination of the following methods:

1. Moisture Curing: Keep surfaces continuously moist for not less than seven days with the following materials:

    a. Water.
    b. Continuous water-fog spray.
    c. Absorptive cover, water saturated, and kept continuously wet. Cover concrete surfaces and edges with 12-inch lap over adjacent absorptive covers.

2. Moisture-Retaining-Cover Curing: Cover concrete surfaces with moisture-retaining cover for curing concrete, placed in widest practicable width, with sides and ends lapped at least 12 inches, and sealed by waterproof tape or adhesive. Cure for not less than seven days. Immediately repair any holes or tears during curing period, using cover material and waterproof tape.

    a. Moisture cure or use moisture-retaining covers to cure concrete surfaces to receive floor coverings.
    b. Moisture cure or use moisture-retaining covers to cure concrete surfaces to receive penetrating liquid floor treatments.
    c. Cure concrete surfaces to receive floor coverings with either a moisture-retaining cover or a curing compound that the manufacturer certifies does not interfere with bonding of floor covering used on Project.

3. Curing Compound: Apply uniformly in continuous operation by power spray or roller according to manufacturer's written instructions. Recoat areas subjected to heavy rainfall within three hours after initial application. Maintain continuity of coating and repair damage during curing period.

   a. Removal: After curing period has elapsed, remove curing compound without damaging concrete surfaces by method recommended by curing compound manufacturer unless manufacturer certifies curing compound does not interfere with bonding of floor covering used on Project.

4. Curing and Sealing Compound: Apply uniformly to floors and slabs indicated in a continuous operation by power spray or roller according to manufacturer's written instructions. Recoat areas subjected to heavy rainfall within three hours after initial application. Repeat process 24 hours later and apply a second coat. Maintain continuity of coating and repair damage during curing period.

3.13 JOINT FILLING

A. Prepare, clean, and install joint filler according to manufacturer's written instructions.

   1. Defer joint filling until concrete has aged at least six months. Do not fill joints until construction traffic has permanently ceased.

B. Remove dirt, debris, saw cuttings, curing compounds, and sealers from joints; leave contact faces of joints clean and dry.

C. Install semirigid joint filler full depth in saw-cut joints and at least 2 inches deep in formed joints. Overfill joint and trim joint filler flush with top of joint after hardening.

3.14 CONCRETE SURFACE REPAIRS

A. Defective Concrete: Repair and patch defective areas when approved by Architect. Remove and replace concrete that cannot be repaired and patched to Architect's approval.

B. Patching Mortar: Mix dry-pack patching mortar, consisting of 1 part portland cement to 2-1/2 parts fine aggregate passing a No. 16 sieve, using only enough water for handling and placing.

C. Repairing Formed Surfaces: Surface defects include color and texture irregularities, cracks, spalls, air bubbles, honeycombs, rock pockets, fins and other projections on the surface, and stains and other discolorations that cannot be removed by cleaning.

   1. Immediately after form removal, cut out honeycombs, rock pockets, and voids more than 1/2 inch in any dimension to solid concrete. Limit cut depth to 3/4 inch. Make edges of cuts perpendicular to concrete surface. Clean, dampen with water, and brush-coat holes and voids with bonding agent. Fill and compact with patching mortar before bonding agent has dried. Fill form-tie voids with patching mortar or cone plugs secured in place with bonding agent.

2. Repair defects on surfaces exposed to view by blending white Portland cement and standard Portland cement so that, when dry, patching mortar matches surrounding color. Patch a test area at inconspicuous locations to verify mixture and color match before proceeding with patching. Compact mortar in place and strike off slightly higher than surrounding surface.
3. Repair defects on concealed formed surfaces that affect concrete's durability and structural performance as determined by Architect.

D. Repairing Unformed Surfaces: Test unformed surfaces, such as floors and slabs, for finish and verify surface tolerances specified for each surface. Correct low and high areas. Test surfaces sloped to drain for trueness of slope and smoothness; use a sloped template.

1. Repair finished surfaces containing defects. Surface defects include spalls, popouts, honeycombs, rock pockets, crazing and cracks in excess of 0.01 inch wide or that penetrate to reinforcement or completely through unreinforced sections regardless of width, and other objectionable conditions.
2. After concrete has cured at least 14 days, correct high areas by grinding.
3. Correct localized low areas during or immediately after completing surface finishing operations by cutting out low areas and replacing with patching mortar. Finish repaired areas to blend into adjacent concrete.
4. Correct other low areas scheduled to receive floor coverings with a repair underlayment. Prepare, mix, and apply repair underlayment and primer according to manufacturer's written instructions to produce a smooth, uniform, plane, and level surface. Feather edges to match adjacent floor elevations.
5. Correct other low areas scheduled to remain exposed with a repair topping. Cut out low areas to ensure a minimum repair topping depth of 1/4 inch to match adjacent floor elevations. Prepare, mix, and apply repair topping and primer according to manufacturer's written instructions to produce a smooth, uniform, plane, and level surface.
6. Repair defective areas, except random cracks and single holes 1 inch or less in diameter, by cutting out and replacing with fresh concrete. Remove defective areas with clean, square cuts and expose steel reinforcement with at least a 3/4-inch clearance all around. Dampen concrete surfaces in contact with patching concrete and apply bonding agent. Mix patching concrete of same materials and mixture as original concrete, except without coarse aggregate. Place, compact, and finish to blend with adjacent finished concrete. Cure in same manner as adjacent concrete.
7. Repair random cracks and single holes 1 inch or less in diameter with patching mortar. Groove top of cracks and cut out holes to sound concrete and clean off dust, dirt, and loose particles. Dampen cleaned concrete surfaces and apply bonding agent. Place patching mortar before bonding agent has dried. Compact patching mortar and finish to match adjacent concrete. Keep patched area continuously moist for at least 72 hours.

E. Perform structural repairs of concrete, subject to Architect's approval, using epoxy adhesive and patching mortar.

F. Repair materials and installation not specified above may be used, subject to Architect's approval.

3.15 FIELD QUALITY CONTROL

A. Special Inspections: Provide free access to work and cooperate with approved firm.

B. Inspections:

1. Steel reinforcement placement.
2. Verification of use of required design mixture.
3. Concrete placement, including conveying and depositing.
4. Curing procedures and maintenance of curing temperature.
5. Verification of concrete strength before removal of shores and forms from beams and slabs.

C. Concrete Tests: Testing of composite samples of fresh concrete obtained according to ASTM C 172/C 172M shall be performed according to the following requirements:

1. Testing Frequency: Obtain one composite sample for each day's pour of each concrete mixture exceeding 5 cu. yd., but less than 25 cu. yd., plus one set for each additional 50 cu. yd. or fraction thereof.
2. Slump: ASTM C 143; one test at point of placement for each composite sample, but not less than one test for each day's pour of each concrete mixture. Perform additional tests when concrete consistency appears to change.
3. Air Content: ASTM C 231, pressure method, for normal-weight concrete; one test for each composite sample, but not less than one test for each day's pour of each concrete mixture.
4. Concrete Temperature: ASTM C 1064; one test hourly when air temperature is 40 degrees F and below or 80 degrees F and above, and one test for each composite sample.

5. Compression Test Specimens: ASTM C 31/C 31M.

   a. Cast and laboratory cure two sets of two standard cylinder specimens for each composite sample.
   b. Cast and field cure two sets of two standard cylinder specimens for each composite sample.

6. Compressive-Strength Tests: ASTM C 39; test one set of two laboratory-cured specimens at 7 days and one set of two specimens at 28 days.

   a. Test one set of two field-cured specimens at 7 days and one set of two specimens at 28 days.
   b. A compressive-strength test shall be the average compressive strength from a set of two specimens obtained from same composite sample and tested at age indicated.

7. When strength of field-cured cylinders is less than 85 percent of companion laboratory-cured cylinders, Contractor shall evaluate operations and provide corrective procedures for protecting and curing in-place concrete.
8. Strength of each concrete mixture will be satisfactory if every average of any three consecutive compressive-strength tests equals or exceeds specified compressive strength and no compressive-strength test value falls below specified compressive strength by more than 500 psi.

9. Test results shall be reported in writing to Architect, concrete manufacturer, and Contractor within 48 hours of testing. Reports of compressive-strength tests shall contain Project identification name and number, date of concrete placement, name of concrete testing and inspecting agency, location of concrete batch in Work, design compressive strength at 28 days, concrete mixture proportions and materials, compressive breaking strength, and type of break for both 7- and 28-day tests.
10. Nondestructive Testing: Impact hammer, sonoscope, or other nondestructive device may be permitted by Architect but will not be used as sole basis for approval or rejection of concrete.
11. Additional Tests: Testing and inspecting agency shall make additional tests of concrete when test results indicate that slump, air entrainment, compressive strengths, or other requirements have not been met, as directed by Architect. Testing and inspecting agency may conduct tests to determine adequacy of concrete by cored cylinders complying with ASTM C 42 or by other methods as directed by Architect.
12. Additional testing and inspecting, at Contractor's expense, will be performed to determine compliance of replaced or additional work with specified requirements.
13. Correct deficiencies in the Work that test reports and inspections indicate do not comply with the Contract Documents.

D. Measure floor and slab flatness and levelness according to ASTM E 1155 within 24 hours of finishing.

E. Soil bearing surfaces beneath foundations shall be inspected by geotechnical engineer or authorized representative to verify the required minimum design bearing capacity has been met or exceeded. The inspection shall be completed prior to placement of reinforcement and concrete.

END OF SECTION

SECTION 04 20 00 - UNIT MASONRY

PART 1 - GENERAL

1.1 SUMMARY

A. Section Includes:
   1. Mortar and grout.
   2. Masonry-joint reinforcement.
   3. Ties and anchors.
   4. Embedded flashing.
   5. Miscellaneous masonry accessories.

B. Products Installed but not Furnished under This Section:
   1. Cavity wall insulation.

C. Related Requirements:
   1. Section 05 12 00 – Structural Steel Framing: Product requirements for steel anchors for placement by this section.
   2. Section 05 50 00 – Metal Fabrications: Product requirements for loose steel lintels, and fabricated steel items for placement by this section.
   3. Section 07 21 13 – Board Insulation: Insulation for cavity spaces.
   4. Section 07 90 00 – Joint Protection: Rod and sealant at control and expansion joints.

1.2 DEFINITIONS

A. CMU(s): Concrete masonry unit(s).

B. Reinforced Masonry: Masonry containing reinforcing steel in grouted cells.

1.3 ACTION SUBMITTALS

A. Product Data: For each type of product.

B. Shop Drawings: For the following:
   1. Masonry Units: Show sizes, profiles, coursing, and locations of special shapes.
   2. Fabricated Flashing: Detail corner units, through wall flashing, end-dam units, and other special applications.
   3. Accessories: Fabricated wire reinforcement, wall ties, anchors, weep hole material, expansion joint strips, cavity drain material, and stainless steel drip edge.

C. Samples: Submit four samples of face brick to illustrate color, texture, and extremes of color range.

1.4 INFORMATIONAL SUBMITTALS

A. Material Certificates: For each type and size of the following:
   1. Cementitious materials. Include name of manufacturer, brand name, and type.
   2. Mortar admixtures.
   3. Preblended, dry mortar mixes. Include description of type and proportions of ingredients.
   4. Grout mixes. Include description of type and proportions of ingredients.
   5. Joint reinforcement.
   6. Anchors, ties, and metal accessories.

B. Mix Designs: For each type of mortar and grout. Include description of type and proportions of ingredients.
   1. Include test reports for mortar mixes required to comply with property specification. Test according to ASTM C 109 for compressive strength, ASTM C 1506 for water retention, and ASTM C 91 for air content.
   2. Include test reports, according to ASTM C 1019, for grout mixes required to comply with compressive strength requirement.

C. Cold-Weather and Hot-Weather Procedures: Detailed description of methods, materials, and equipment to be used to comply with requirements.

1.5 DELIVERY, STORAGE, AND HANDLING

A. Store cementitious materials on elevated platforms, under cover, and in a dry location. Do not use cementitious materials that have become damp.

B. Store aggregates where grading and other required characteristics can be maintained and contamination avoided.

C. Deliver preblended, dry mortar mix in moisture-resistant containers. Store preblended, dry mortar mix in delivery containers on elevated platforms in a dry location or in covered weatherproof dispensing silos.

D. Store masonry accessories, including metal items, to prevent corrosion and accumulation of dirt and oil.

1.6 FIELD CONDITIONS

A. Protection of Masonry: During construction, cover tops of walls, projections, and sills with waterproof sheeting at end of each day's work. Cover partially completed masonry when construction is not in progress.
   1. Extend cover a minimum of 24 inches down both sides of walls, and hold cover securely in place.

B. Do not apply uniform floor or roof loads for at least 12 hours and concentrated loads for at least three days after building masonry walls or columns.

C. Stain Prevention: Prevent grout, mortar, and soil from staining the face of masonry to be left exposed or painted. Immediately remove grout, mortar, and soil that come in contact with such masonry.
   1. Protect base of walls from rain-splashed mud and from mortar splatter by spreading coverings on ground and over wall surface.
   2. Turn scaffold boards near the wall on edge at the end of each day to prevent rain from splashing mortar and dirt onto completed masonry.

D. Cold-Weather Requirements: Do not use frozen materials or materials mixed or coated with ice or frost. Do not build on frozen substrates. Remove and replace unit masonry damaged by frost or by freezing conditions. Comply with cold-weather construction requirements contained in TMS 602/ACI 530.1/ASCE 6.
   1. Cold-Weather Cleaning: Use liquid cleaning methods only when air temperature is 40 deg F and higher and will remain so until masonry has dried, but not less than seven days after completing cleaning.

E. Hot-Weather Requirements: Comply with hot-weather construction requirements contained in TMS 602/ACI 530.1/ASCE 6.

PART 2 - PRODUCTS

2.1 MANUFACTURERS

A. Source Limitations for Mortar Materials: Obtain mortar ingredients of a uniform quality, including color for exposed masonry, from single manufacturer for each cementitious component and from single source or producer for each aggregate.

2.2 UNIT MASONRY ASSEMBLIES

A. Manufacturers:
   1. Glen Gery Brick
      a. Brick A: R27-28 Golden Dawn modular.
      b. Brick B: R21-22 Burnt Almond modular.
   2. Substitutions: Not permitted.

2.3 COMPONENTS

A. Facing Brick: ASTM C216, Type FBS, Grade SW.

B. Brick Size and Shape:
   1. Face Brick: Nominal size of 3-5/8 inches x 2-1/4 inches x 7-5/8 inches.

C. Hollow and Solid Load Bearing Concrete Masonry Units (CMU): ASTM C90; normal weight.

D. Hollow Non-Load Bearing Concrete Masonry Units (CMU): ASTM C129; medium weight.

E. Concrete Masonry Unit Size and Shape: Nominal modular size of 7-5/8 inches tall by 3-5/8 inches thick by 15-5/8 inches long, 7-5/8 inches tall by 7-5/8 inches thick by 15-5/8 inches long and 7-5/8 inches tall by 11-5/8 inches thick by 15-5/8 inches long. Furnish special units for 90 degree corners, bond beams, lintels and any bullnose block specifically labelled on Drawings. Bullnose corners shall not be permitted at wall corners or door jambs.

2.4 MORTAR AND GROUT MATERIALS

A. Portland Cement: ASTM C 150, Type I or II, except Type III may be used for cold-weather construction. Provide natural color or white cement as required to produce mortar color indicated.
   1. Alkali content shall not be more than 0.1 percent when tested according to ASTM C 114.

B. Hydrated Lime: ASTM C 207, Type S.

C. Portland Cement-Lime Mix: Packaged blend of Portland cement and hydrated lime containing no other ingredients.

D. Masonry Cement: ASTM C 91.
   1. Manufacturers:
      a. Blue Circle Cement.
      b. CTS Cement Manufacturing Co.
      c. Lehigh Cement Co.
      d. Medusa Cement Co.
      e. The Quikrete Companies.
      f. Solomon Colors.
      g. Sothern Grouts and Mortars.
      h. Substitutions: Not Permitted.

E. Mortar Cement: ASTM C 1329.
   1. Manufacturers:
      a. Blue Circle Cement.
      b. CTS Cement Manufacturing Co.
      c. Lehigh Cement Co.
      d. Medusa Cement Co.
      e. The Quikrete Companies.
      f. Solomon Colors.
      g. Sothern Grouts and Mortars.
      h. Substitutions: Not Permitted.

F. Aggregate for Mortar: ASTM C 144.
   1. For mortar that is exposed to view, use washed aggregate consisting of natural sand or crushed stone.
   2. For joints less than 1/4 inch thick, use aggregate graded with 100 percent passing the No. 16 sieve.
   3. White-Mortar Aggregates: Natural white sand or crushed white stone.
   4. Colored-Mortar Aggregates: Natural sand or crushed stone of color necessary to produce required mortar color.

G. Aggregate for Grout: ASTM C 404.

H. Cold-Weather Admixture: Nonchloride, noncorrosive, accelerating admixture complying with ASTM C 494, Type C, and recommended by manufacturer for use in masonry mortar of composition indicated.

I. Water: Potable.

2.5 REINFORCEMENT

A. Masonry-Joint Reinforcement, General: ASTM A 951.
   1. Exterior Walls: Hot-dip galvanized carbon steel.
   2. Wire Size for Side Rods: As indicated on Drawings.

B. Uncoated-Steel Reinforcing Bars: ASTM A 615, Grade 60.

C. Reinforcing Bar Positioners: Wire units designed to fit into mortar bed joints spanning masonry unit cells and to hold reinforcing bars in center of cells Units are formed from 0.148-inch steel wire, hot-dip galvanized after fabrication. Provide units designed for number of bars indicated.

D. Masonry-Joint Reinforcement for Veneers Anchored with Seismic Masonry-Veneer Anchors: Single 0.187-inch-diameter, hot-dip galvanized carbon-steel continuous wire.

2.6 TIES AND ANCHORS

A. General: Ties and anchors shall extend at least 1-1/2 inches into veneer but with at least a 5/8-inch cover on outside face.

B. Materials: Provide ties and anchors specified in this article that are made from materials that comply with the following unless otherwise indicated:
   1. Hot-Dip Galvanized, Carbon-Steel Wire: ASTM A 82, with ASTM A 153, Class B-2 coating.
   2. Steel Sheet, Galvanized after Fabrication: ASTM A 1008, Commercial Steel, with ASTM A 153, Class B coating.

C. Adjustable Masonry-Veneer Anchors:
   1. General: Provide anchors that allow vertical adjustment but resist a 100-lbf load in both tension and compression perpendicular to plane of wall without deforming or developing play in excess of 1/16 inch.
   2. Fabricate sheet metal anchor sections and other sheet metal parts from 0.105-inch-thick steel sheet, galvanized after fabrication
   3. Fabricate wire ties from 0.187-inch diameter, hot-dip galvanized-steel wire unless otherwise indicated.
   4. Contractor's Option: Unless otherwise indicated, provide any of the adjustable masonry-veneer anchors specified.
   5. Screw-Attached, Masonry-Veneer Anchors: Wire tie and a rib-stiffened, sheet metal anchor section with screw holes top and bottom, with a projecting vertical tab having a slotted hole for inserting wire tie.
   6. Screw-Attached, Masonry-Veneer Anchors: Wire tie and a rib-stiffened, sheet metal anchor section with screw holes top and bottom, with projecting tabs having holes for inserting vertical legs of wire tie formed to fit anchor section.

7. Screw-Attached, Masonry-Veneer Anchors: Wire tie and a sheet metal anchor section, 1-1/4 inches wide by 9 inches long, with screw holes top and bottom and with raised rib-stiffened strap, 5/8 inch wide by 5-1/2 inches long, stamped into center to provide a slot between strap and base for inserting wire tie.
8. Screw-Attached, Masonry-Veneer Anchors: Wire tie and a sheet metal anchor section, 1-1/4 inches wide by 6 inches long, with screw holes top and bottom and with raised rib-stiffened strap, 5/8 inch wide by 3-5/8 inches long, stamped into center to provide a slot between strap and base for inserting wire tie.
9. Screw-Attached, Masonry-Veneer Anchors: Wire tie and a gasketed sheet metal anchor section, 1-1/4 inches wide by 6 inches long, with screw holes top and bottom; top and bottom ends bent to form pronged legs of length to match thickness of insulation or sheathing; and raised rib-stiffened strap, 5/8 inch wide by 6 inches long, stamped into center to provide a slot between strap and base for inserting wire tie. Self-adhering, modified bituminous gasket fits behind anchor plate and extends beyond pronged legs.
10. Screw-Attached, Masonry-Veneer Anchors: Wire tie and a corrosion-resistant, self-drilling, eye-screw designed to receive wire tie. Eye-screw has spacer that seats directly against framing and is same thickness as sheathing and has gasketed washer head that covers hole in sheathing.
11. Seismic Masonry-Veneer Anchors: Connector section and rib-stiffened, sheet metal anchor section with screw holes top and bottom, with projecting tabs having slotted holes for inserting vertical leg of connector section. Connector section consists of a rib-stiffened, sheet metal bent plate with down-turned leg designed to fit in anchor section slot and with integral tabs designed to engage continuous wire.
12. Seismic Masonry-Veneer Anchors: Wire tie and a rib-stiffened, sheet metal anchor section with screw holes top and bottom, with projecting tabs having holes for inserting vertical legs of wire tie formed to fit anchor section. Wire tie has sheet metal clip welded to it with integral tabs designed to engage continuous wire.

2.7 EMBEDDED FLASHING MATERIALS

A. Metal Flashing: Provide metal flashing complying with SMACNA's "Architectural Sheet Metal Manual" and as follows:
   1. Stainless Steel: ASTM A 240/A 240M or ASTM A 666, Type 304, 0.016 inch thick.
   2. Fabricate continuous flashings in sections 96 inches long minimum, but not exceeding 12 feet. Provide splice plates at joints of formed, smooth metal flashing.
   3. Fabricate through-wall metal flashing embedded in masonry from stainless steel, with ribs at 3-inch intervals along length of flashing to provide an integral mortar bond.
   4. Fabricate through-wall flashing with drip edge unless otherwise indicated. Fabricate by extending flashing 1/2 inch out from wall, with outer edge bent down 30 degree and hemmed.

B. Rubberized Asphalt Laminate Flashing: Flashing, end dams, boots and corners shall consist of 36-mil pliable and highly adhesive rubberized asphalt compound laminated to a 4-mil high-density cross-laminated polyethylene film to produce an overall thickness of 40 mils.
   1. Acceptable manufacturers and products:
      a. Illinois Products Corporation (IPCO), West Chicago, IL, Phone: 1.800.383.8183.
      b. Polyguard Products, Inc., Ennis, TX, Phone: 1.800.541.4994.
      c. Substitutions: Section 01 60 00 Product Requirements.

C. Solder and Sealants for Sheet Metal Flashings: As specified in Section 076200 "Sheet Metal Flashing and Trim."

D. Adhesives, Primers, and Seam Tapes for Flashings: Flashing manufacturer's standard products or products recommended by flashing manufacturer for bonding flashing sheets to each other and to substrates.

2.8 MISCELLANEOUS MASONRY ACCESSORIES

A. Expansion Joint Filler Strips:
   1. Strips shall be a factory molded product of rubber conforming to ASTM D375, Grade R-805, with compressible neoprene compound edge conforming to ASTM D375, Grade SC-310C, durometer hardness of 30. All strips shall be wide flange type with shear lugs, resistant to oil and solvents and shall meet requirements of ASTM D736 after being exposed to a temperature of -40 degrees F. Width of strips shall be as required by wall masonry thickness.

B. Preformed Control Joints:
   1. Strips sized for standard sash block and designed to allow movement while maintaining lateral stability, and as follows:
      a. Either styrene-butadiene rubber compound complying with ASTM D2000, 2AA-805; or polyvinyl chloride complying with ASTM D2287, Type PVC 654-4.

C. Bond-Breaker Strips: Asphalt-saturated felt complying with ASTM D 226/D 226M, Type I (No. 15 asphalt felt).

D. Weepvent material at veneer masonry shall be 0.016 inch thick aluminum alloy and shall be installed at 16 inches on center, maximum.
   1. A one-piece stamping incorporating a louvered front vented area and a mortar shield.
   2. Mortar shield shall be approximately 1 1/16 inch wide and 3 3/16 inch long, designed to be bent back and lay flat against top brick surfaces on each side of joint thus forming a shield to keep mortar out of head joint.
   3. Front vented area shall be at least 90 degrees to mortar shield and shall form the head joint between two bricks.
      a. Face of vented area shall be approximately 7/16 inch wide with a 3/16 inch wide (minimum) side shields turned back on each side, by 3 ¾ inches high.
      b. Vented area shall be vented by eight louvered openings which are punched out 1/8 inch and protrude 1/16 inch from the face and sloping downward.
      c. Punched louvered vents shall be separated by 1/8 inch flat metal surfaces.
      d. Vent finish shall be selected by the Architect/Engineer from the manufacturers full color selection.

E. Cavity Drain Material: Open polyethylene mesh, thickness required to fill cavity space and shaped to ensure moisture drainage to cavity weeps.

2.9 MASONRY CLEANERS

A. Proprietary Acidic Cleaner: Manufacturer's standard-strength cleaner designed for removing mortar/grout stains, efflorescence, and other new construction stains from new masonry without discoloring or damaging masonry surfaces. Use product expressly approved for intended use by cleaner manufacturer and manufacturer of masonry units being cleaned.

2.10 MORTAR AND GROUT MIXES

A. General: Do not use admixtures, including pigments, air-entraining agents, accelerators, retarders, water-repellent agents, antifreeze compounds, or other admixtures unless otherwise indicated.
   1. Do not use calcium chloride in mortar or grout.
   2. For exterior masonry, use portland cement-lime, masonry cement or mortar cement mortar.
   3. Add cold-weather admixture (if used) at same rate for all mortar that will be exposed to view, regardless of weather conditions, to ensure that mortar color is consistent.

B. Mortar for Unit Masonry: Comply with ASTM C 270, [Property Specification. Provide the following types of mortar for applications stated unless another type is indicated or needed to provide required compressive strength of masonry.
   1. For exterior, above-grade, load-bearing and nonload-bearing walls and parapet walls; for interior load-bearing walls; for interior nonload-bearing partitions; and for other applications where another type is not indicated, use Type N.

C. Grout for Unit Masonry: Comply with ASTM C 476.
   1. Use grout of type indicated or, if not otherwise indicated, of type (fine or coarse) that will comply with TMS 602/ACI 530.1/ASCE 6 for dimensions of grout spaces and pour height.
   2. Proportion grout in accordance with ASTM C 476, Table 1 or paragraph 4.2.2 for specified 28-day compressive strength indicated, but not less than 2000 psi.
   3. Provide grout with a slump of 8 to 11 inches as measured according to ASTM C 143/C 143M.

PART 3 - EXECUTION

3.1 EXAMINATION

A. Examine conditions, with Installer present, for compliance with requirements for installation tolerances and other conditions affecting performance of the Work.
   1. For the record, prepare written report, endorsed by Installer, listing conditions detrimental to performance of the Work.
   2. Verify that substrates are free of substances that impair mortar bond.

B. Before installation, examine rough-in and built-in construction for piping systems to verify actual locations of piping connections.

C. Proceed with installation only after unsatisfactory conditions have been corrected.

3.2 PREPARATION

A. Direct and coordinate placement of metal anchors supplied to other sections.

B. Furnish temporary bracing during installation of masonry work. Maintain in place until building structure provides permanent support.

C. Wet clay and shale brick before laying when initial rate of absorption is greater than 30 grams when tested in accordance with ASTM C67,

3.3 INSTALLATION, GENERAL

A. Thickness: Build cavity and composite walls and other masonry construction to full thickness shown. Build single-wythe walls to actual widths of masonry units, using units of widths indicated.

B. Cut and fit for chases, pipes, conduit, and sleeves. Coordinate with other sections of work to provide correct size, shape, and location. Obtain Architect/Engineer's approval prior to cutting or fitting masonry work not indicated or where appearance or strength of masonry work may be impaired.

C. Leave openings for equipment to be installed before completing masonry. After installing equipment, complete masonry to match construction immediately adjacent to opening.

D. Use full-size units without cutting if possible. If cutting is required to provide a continuous pattern or to fit adjoining construction, cut units with motor-driven saws; provide clean, sharp, unchipped edges. Allow units to dry before laying unless wetting of units is specified. Install cut units with cut surfaces and, where possible, cut edges concealed.

E. Matching Existing Masonry: Match coursing of existing masonry.

F. Coursing of Concrete Masonry Units:
   1. Bond: Running
   2. Coursing: One unit and one mortar joint to equal 8 inches.
   3. Mortar Joints: Concave.

G. Coursing of Brick Units:
   1. Facing Brick:
      a. Bond: Running Bond.
      b. Coursing: Three units and three mortar joints equal 8 inches.
      c. Mortar Joints: Concave to match existing.

H. Built-In Work:
   1. As work progresses, install built-in metal door and glazed frames, fabricated metal frames, window frames, wood nailing strips, anchor bolts, plates, and other items to be built-in the work and furnished by other sections.
   2. Install built-in items plumb and level.
   3. Bend anchors of metal door and glazed frames in adjacent mortar joints. Fill adjacent masonry cores with grout minimum 12 inches from framed openings.
   4. Do not build in materials subject to deterioration.

3.4 TOLERANCES

A. Maximum Variation of Elements:
   1. Maximum Variation from Unit to Adjacent Unit: 1/16 inch.
   2. Maximum Variation from Plane of Wall: 1/4 inch in 10 feet and 1/2 inch in 20 feet or more.
   3. Maximum Variation from Sectional Thickness of Walls: 1/4 inch.

B. Lines and Levels:
   1. For bed joints and top surfaces of bearing walls, do not vary from level by more than 1/4 inch in 10 feet, or 1/2-inch maximum.
   2. For conspicuous horizontal lines, such as lintels, sills, parapets, and reveals, do not vary from level by more than 1/8 inch in 10 feet, 1/4 inch in 20 feet, or 1/2-inch maximum.
   3. For vertical lines and surfaces, do not vary from plumb by more than 1/4 inch in 10 feet, 3/8 inch in 20 feet, or 1/2-inch maximum.
   4. For conspicuous vertical lines, such as external corners, door jambs, reveals, and expansion and control joints, do not vary from plumb by more than 1/8 inch in 10 feet, 1/4 inch in 20 feet, or 1/2-inch maximum.
   5. For lines and surfaces, do not vary from straight by more than 1/4 inch in 10 feet, 3/8 inch in 20 feet, or 1/2-inch maximum.
   6. For vertical alignment of exposed head joints, do not vary from plumb by more than 1/4 inch in 10 feet or 1/2-inch maximum.

C. Joints:
   1. For bed joints, do not vary from thickness indicated by more than plus or minus 1/8 inch, with a maximum thickness limited to 1/2 inch.
   2. For exposed bed joints, do not vary from bed-joint thickness of adjacent courses by more than 1/8 inch.
   3. For head and collar joints, do not vary from thickness indicated by more than plus 3/8 inch or minus 1/4 inch.
   4. For exposed head joints, do not vary from thickness indicated by more than plus or minus 1/8 inch. Do not vary from adjacent bed-joint and head-joint thicknesses by more than 1/8 inch.
   5. For exposed bed joints and head joints of stacked bond, do not vary from a straight line by more than 1/16 inch from one masonry unit to the next.

D. Steel Reinforcement:
   1. Install reinforcement with the tolerances specified in ACI 530.1 for foundation walls.
   2. Plus or minus 1/2 inch when distance from centerline of steel to opposite face of masonry is 8 inches or less.
   3. Plus or minus 1 inch when distance is between 8 and 24 inches.
   4. Plus or minus 1-1/4 inch when distance is greater than 24 inches.
   5. Plus or minus 2 inches from location along face of wall.

3.5 LAYING MASONRY WALLS

A. Lay concealed masonry with all units in a wythe in running bond or bonded by lapping not less than 4 inches. Bond and interlock each course of each wythe at corners. Do not use units with less than nominal 4 inch horizontal face dimensions at corners or jambs.

B. Stopping and Resuming Work: Stop work by stepping back units in each course from those in course below; do not tooth. When resuming work, clean masonry surfaces that are to receive mortar, remove loose masonry units and mortar, and wet brick if required before laying fresh masonry.

C. Fill space between steel frames and masonry solidly with mortar unless otherwise indicated.

D. Fill cores in hollow CMUs with grout 24 inches under bearing plates, beams, lintels, posts, and similar items unless otherwise indicated.

E. Build nonload-bearing interior partitions full height of story to underside of solid floor or roof structure above unless otherwise indicated.

F. Lay solid masonry units in full bed of mortar, with full head joints.

G. Lay hollow masonry units with face shell bedding on head and bed joints.

H. Buttering corners of joints or excessive furrowing of mortar joints are not permitted.

I. Remove excess mortar as work progresses.

J. Interlock intersections and external corners.

K. Do not shift or tap masonry units after mortar has achieved initial set. Where adjustment is required, remove mortar and replace.

L. Preform job site cutting of masonry units with proper tools to assure straight, clean, unchipped edges. Prevent broken masonry unit corners or edges.

M. Cut mortar joints flush where wall tile is scheduled, cement parging required, resilient base is scheduled, cavity insulation vapor retarder adhesive is applied, or bitumen dampproofing is applied.

N. Isolate top of masonry from horizontal structural framing members and slabs or decks with compressible joint filler.

3.6 MORTAR BEDDING AND JOINTING

A. Lay CMUs as follows:
   1. Bed face shells in mortar and make head joints of depth equal to bed joints.
   2. Bed webs in mortar in all courses of piers, columns, and pilasters.
   3. Bed webs in mortar in grouted masonry, including starting course on footings.
   4. Fully bed entire units, including areas under cells, at starting course on footings where cells are not grouted.
   5. Fully bed units and fill cells with mortar at anchors and ties as needed to fully embed anchors and ties in mortar.

B. Tool exposed joints slightly concave when thumbprint hard, using a jointer larger than joint thickness unless otherwise indicated.

3.7 ANCHORED MASONRY VENEERS

A. Anchor masonry veneers to wall framing with masonry-veneer anchors to comply with the following requirements:
   1. Embed tie sections, connector sections and continuous wire in masonry joints.
   2. Locate anchor sections to allow maximum vertical differential movement of ties up and down.
   3. Space anchors not more than 25 inches on center, vertically and 32 inches on center, horizontally, with not less than one anchor for each 2 sq. ft. of wall area. Install additional anchors within 12 inches of openings larger than 16 inches in either dimension and at intervals, not exceeding 8 inches, around perimeter.

B. Provide not less than 1-3/4 inch of airspace between back of masonry veneer and face of insulation.
   1. Keep airspace clean of mortar droppings and other materials during construction. Bevel beds away from airspace, to minimize mortar protrusions into airspace. Do not attempt to trowel or remove mortar fins protruding into airspace.

3.8 MASONRY-JOINT REINFORCEMENT

A. General: Install entire length of longitudinal side rods in mortar with a minimum cover of 5/8 inch on exterior side of walls, 1/2 inch elsewhere. Lap reinforcement a minimum of 6 inches.
   1. Space reinforcement not more than 16 inches on center.

B. Interrupt joint reinforcement at control and expansion joints unless otherwise indicated.

3.9 CONTROL AND EXPANSION JOINTS

A. General: Install control- and expansion-joint materials in unit masonry as masonry progresses. Do not allow materials to span control and expansion joints without provision to allow for in-plane wall or partition movement.

B. Form control joints in concrete masonry between existing masonry walls and newly laid masonry walls.

C. Install control and expansion joints at the following maximum spacings, unless otherwise indicated on Drawings.
   1. Exterior Brick Walls: 20 feet on center and within 24 inches on one side of each interior and exterior corner.
   2. Interior CMU Walls: 50 feet on center.
   3. At changes in wall height.
   4. At changes in wall thickness.

D. Do not continue horizontal joint reinforcement through control and expansion joints except as specified for masonry lintels.

E. Install preferred control joint device in continuous lengths. Seal butt and corner joints.

F. Size control joints in accordance with Section 07 90 00 for sealant performance.

G. Form expansion joint by omitting mortar and cutting unit to form open space.

3.10 FLASHING, WEEP HOLES, AND CAVITY VENTS

A. General: Install embedded flashing and weep holes in masonry at bottom of wall and other ledges, other obstructions to downward flow of water in wall.

B. Install flashing as follows unless otherwise indicated:
   1. Prepare masonry surfaces so they are smooth and free from projections that could puncture flashing. Where flashing is within mortar joint, place through-wall flashing on sloping bed of mortar and cover with mortar. Before covering with mortar, seal penetrations in flashing with adhesive, sealant, or tape as recommended by flashing manufacturer.
   2. At masonry-veneer walls, extend flashing through veneer, across airspace behind veneer, and up face of sheathing at least 8 inches; with upper edge tucked under water-resistive barrier, lapping at least 6 inches. Fasten upper edge of flexible flashing to sheathing through termination bar.
   3. Interlock end joints of ribbed sheet metal flashing by overlapping ribs not less than 1-1/2 inches or as recommended by flashing manufacturer, and seal lap with elastomeric sealant complying with requirements in Section 079200 "Joint Sealants" for application indicated.
   4. Install metal drip edges beneath flexible flashing at exterior face of wall. Stop flexible flashing 1/2 inch back from outside face of wall, and adhere flexible flashing to top of metal drip edge.
   5. Extend flashings horizontally through outer wythe at foundation walls, above ledge or shelf angels and lintels, at bottom of walls, and turn down on outside face to form drip.
   6. Turn flashing, fold, and seal at corners, bends, and interruptions.

C. Weeps and Vents: Furnish weeps and vents in outer wythe at 16 inches on center horizontally above through-wall flashing, above shelf angles and lintels, and at bottom of walls.

D. Cavity Wall: Do not permit mortar to drop or accumulate into cavity air space or to plug weeps. Build inner wythe ahead of outer wythe to receive cavity insulation and air/vapor retarder adhesive.
   1. Install cavity drain material continuously at bottom of each cavity above through wall flashing.

3.11 REPAIRING, POINTING, AND CLEANING

A. Remove and replace masonry units that are loose, chipped, broken, stained, or otherwise damaged or that do not match adjoining units. Install new units to match adjoining units; install in fresh mortar, pointed to eliminate evidence of replacement.

B. Pointing: During the tooling of joints, enlarge voids and holes, except weep holes, and completely fill with mortar. Point up joints, including corners, openings, and adjacent construction, to provide a neat, uniform appearance. Prepare joints for sealant application, where indicated.

C. In-Progress Cleaning: Clean unit masonry as work progresses by dry brushing to remove mortar fins and smears before tooling joints.

D. Final Cleaning: After mortar is thoroughly set and cured, clean exposed masonry as follows:
   1. Remove large mortar particles by hand with wooden paddles and nonmetallic scrape hoes or chisels.
   2. Test cleaning methods on sample wall panel; leave one-half of panel uncleaned for comparison purposes. Obtain Architect's approval of sample cleaning before proceeding with cleaning of masonry.
   3. Protect adjacent stone and nonmasonry surfaces from contact with cleaner by covering them with liquid strippable masking agent or polyethylene film and waterproof masking tape.
   4. Wet wall surfaces with water before applying cleaners; remove cleaners promptly by rinsing surfaces thoroughly with clear water.
   5. Clean brick by bucket-and-brush hand-cleaning method described in BIA Technical Notes 20.
   6. Clean concrete masonry by applicable cleaning methods indicated in NCMA TEK 8-4A.
   7. Clean masonry with a proprietary acidic cleaner applied according to manufacturer's written instructions.

3.12 FIELD QUALITY CONTROL

A. Section 01 40 00 – Quality Requirements: Field inspecting, testing, adjusting, and balancing.

B. Concrete Masonry Units: Test each type in accordance with ASTM C140.

3.13 PROTECTION OF FINISHED WORK

A. Section 01 70 00 – Execution and Closeout Requirements: Requirements for projecting finished Work.

B. Protect and exposed external corners subject to damage. Protect base of walls from mud and mortar splatter.

C. Protect masonry and other items built into masonry walls from mortar droppings and staining caused by mortar.

D. Protect tops of masonry work with waterproof coverings secured in place without damaging masonry. Provide coverings where masonry is exposed to weather when work is not in progress.

3.14 MASONRY WASTE DISPOSAL

A. Salvageable Materials: Unless otherwise indicated, excess masonry materials are Contractor's property. At completion of unit masonry work, remove from Project site.

END OF SECTION

SECTION 05 31 00 - STEEL DECKING

PART 1 - GENERAL

1.1 SUMMARY

A. Section Includes:

1. Roof deck.

B. Related Requirements:

1. Section 05 50 00 "Metal Fabrications" for framing deck openings with miscellaneous steel shapes.

1.2 ACTION SUBMITTALS

A. Product Data: For each type of deck, accessory, and product indicated.

B. Shop Drawings:

1. Include layout and types of deck panels, anchorage details, reinforcing channels, pans, cut deck openings, special jointing, accessories, and attachments to other construction.

1.3 INFORMATIONAL SUBMITTALS

A. Welding certificates.

B. Product Certificates: For each type of steel deck.

C. Product Test Reports: For tests performed by a qualified testing agency, indicating that each of the following complies with requirements:

1. Power-actuated mechanical fasteners.

D. Evaluation Reports: For steel deck, from ICC-ES.

E. Field quality-control reports.

1.4 QUALITY ASSURANCE

A. Testing Agency Qualifications: Qualified according to ASTM E 329 for testing indicated.

B. Welding Qualifications: Qualify procedures and personnel according to AWS D1.3, "Structural Welding Code - Sheet Steel."

1.5 DELIVERY, STORAGE, AND HANDLING

A. Protect steel deck from corrosion, deformation, and other damage during delivery, storage, and handling.

B. Stack steel deck on platforms or pallets and slope to provide drainage. Protect with a waterproof covering and ventilate to avoid condensation.

PART 2 - PRODUCTS

2.1 PERFORMANCE REQUIREMENTS

A. AISI Specifications: Comply with calculated structural characteristics of steel deck according to AISI's "North American Specification for the Design of Cold-Formed Steel Structural Members."

2.2 ROOF DECK

A. Manufacturers:

1. Canam Steel Corporations; Canam Group, Inc.
2. CMC Joist and Deck.
3. New Millennium Building Systems, LLC.
4. Vulcraft.
5. Substitutions: Section 016000 “Product Requirements”.

B. Roof Deck: Fabricate panels, without top-flange stiffening grooves, to comply with "SDI Specifications and Commentary for Steel Roof Deck," in SDI Publication No. 31, and with the following:

1. Galvanized-Steel Sheet: ASTM A 653, Structural Steel (SS), Grade 33, zinc coating.
2. Deck Profile: As indicated.
3. Profile Depth: As indicated.
4. Design Uncoated-Steel Thickness: As indicated.
5. Span Condition: Triple span or more.
6. Side Laps: Overlapped or interlocking seam at Contractor's option.

2.3 ACCESSORIES

A. General: Provide manufacturer's standard accessory materials for deck that comply with requirements indicated.

B. Mechanical Fasteners: Corrosion-resistant, low-velocity, power-actuated or pneumatically driven carbon-steel fasteners; or self-drilling, self-threading screws.

C. Side-Lap Fasteners: As indicated on Contract Documents.

D. Flexible Closure Strips: Vulcanized, closed-cell, synthetic rubber.

E. Miscellaneous Sheet Metal Deck Accessories: Steel sheet, minimum yield strength of 33,000 psi, not less than 0.0359-inch design uncoated thickness, of same material and finish as deck; of profile indicated or required for application.

F. Pour Stops and Girder Fillers: Steel sheet, minimum yield strength of 33,000 psi, of same material and finish as deck, and of thickness and profile recommended by SDI Publication No. 31 for overhang and slab depth.

G. Column Closures, End Closures, Z-Closures, and Cover Plates: Steel sheet, of same material, finish, and thickness as deck unless otherwise indicated.

H. Weld Washers: Uncoated steel sheet, shaped to fit deck rib, 0.0747 inch thick, with factory-punched hole of 3/8-inch minimum diameter.

I. Flat Sump Plates: Single-piece steel sheet, 0.0747 inch thick, of same material and finish as deck. For drains, cut holes in the field.

J. Galvanizing Repair Paint: ASTM A 780, SSPC-Paint 20, with dry film containing a minimum of 94 percent zinc dust by weight.

K. Repair Paint: Manufacturer's standard rust-inhibitive primer of same color as primer.

PART 3 - EXECUTION

3.1 EXAMINATION

A. Examine supporting frame and field conditions for compliance with requirements for installation tolerances and other conditions affecting performance of the Work.

B. Proceed with installation only after unsatisfactory conditions have been corrected.

3.2 INSTALLATION, GENERAL

A. Install deck panels and accessories according to applicable specifications and commentary in SDI Publication No. 31, manufacturer's written instructions, and requirements in this Section.

B. Install temporary shoring before placing deck panels if required to meet deflection limitations.

C. Locate deck bundles to prevent overloading of supporting members.

D. Place deck panels on supporting frame and adjust to final position with ends accurately aligned and bearing on supporting frame before being permanently fastened. Do not stretch or contract side-lap interlocks.

E. Place deck panels flat and square and fasten to supporting frame without warp or deflection.

F. Cut and neatly fit deck panels and accessories around openings and other work projecting through or adjacent to deck.

G. Provide additional reinforcement and closure pieces at openings as required for strength, continuity of deck, and support of other work.

H. Comply with AWS requirements and procedures for manual shielded metal arc welding, appearance and quality of welds, and methods used for correcting welding work.

I. Mechanical fasteners may be used in lieu of welding to fasten deck. Locate mechanical fasteners and install according to deck manufacturer's written instructions.

3.3 ROOF-DECK INSTALLATION

A. Fasten roof-deck panels to steel supporting members as indicated on Contract Documents.

B. Side-Lap and Perimeter Edge Fastening: Fasten side laps and perimeter edges of panels between supports, as indicated on Contract Documents.

C. End Bearing: Install deck ends over supporting frame with a minimum end bearing of 1-1/2 inches, with end joints as follows:

1. End Joints: Lapped 2 inches minimum or butted at Contractor's option.

D. Roof Sump Pans and Sump Plates: Install over openings provided in roof deck and weld flanges to top of deck. Space welds not more than 12 inches apart with at least one weld at each corner.

1. Install reinforcing channels or zees in ribs to span between supports and mechanically fasten.

E. Miscellaneous Roof-Deck Accessories: Install ridge and valley plates, finish strips, end closures, and reinforcing channels according to deck manufacturer's written instructions. Weld or mechanically fasten to substrate to provide a complete deck installation.

1. Weld cover plates at changes in direction of roof-deck panels unless otherwise indicated.

F. Flexible Closure Strips: Install flexible closure strips over partitions, walls, and where indicated. Install with adhesive according to manufacturer's written instructions to ensure complete closure.

3.4 FIELD QUALITY CONTROL

A. Testing Agency: Engage a qualified testing agency to perform tests and inspections.

B. Field welds will be subject to inspection.

C. Prepare test and inspection reports and submit to E.O.R.

3.5 PROTECTION

A. Galvanizing Repairs: Prepare and repair damaged galvanized coatings on both surfaces of deck with galvanized repair paint according to ASTM A 780 and manufacturer's written instructions.

END OF SECTION

SECTION 05 40 00 - COLD-FORMED METAL FRAMING

PART 1 - GENERAL

1.1 RELATED DOCUMENTS

A. Drawings and general provisions of the Contract, including General and Supplementary Conditions and Division 01 Specification Sections, apply to this Section.

1.2 SUMMARY

A. Section Includes:

1. Roof rafter framing.

B. Related Requirements:

1. Section 055000 "Metal Fabrications" for miscellaneous steel shapes, masonry shelf angles, and connections used with cold-formed metal framing.

1.3 ACTION SUBMITTALS

A. Product Data: For each type of product.

B. Shop Drawings:

1. Include layout, spacings, sizes, thicknesses, and types of cold-formed steel framing; fabrication; and fastening and anchorage details, including mechanical fasteners.
2. Indicate reinforcing channels, opening framing, supplemental framing, strapping, bracing, bridging, splices, accessories, connection details, and attachment to adjoining work.

1.4 QUALITY ASSURANCE

A. Comply with AISI S230 "Standard for Cold-Formed Steel Framing - Prescriptive Method for One and Two Family Dwellings."

PART 2 - PRODUCTS

2.1 MANUFACTURERS

A. Manufacturers: Subject to compliance with requirements, provide products by one of the following:

1. ClarkDietrich Building Systems.
2. Craco Manufacturing, Inc.
3. Jaimes Industries.
4. MarinoWARE.
5. SCAFCO Steel Stud Company.
6. Steeler, Inc.
7. Substitutions: Section 016000 “Product Requirements”.

2.2 PERFORMANCE REQUIREMENTS

A. Cold-Formed Steel Framing Standards: Unless more stringent requirements are indicated, framing shall comply with AISI S100, AISI S200, and the following:

1. Floor and Roof Systems: AISI S210.

B. Fire-Resistance Ratings: Comply with ASTM E 119; testing by a qualified testing agency. Identify products with appropriate markings of applicable testing agency.

1. Indicate design designations from UL's "Fire Resistance Directory" or from the listings of another qualified testing agency acceptable to authorities having jurisdiction.

2.3 COLD-FORMED STEEL FRAMING MATERIALS

A. Steel Sheet: ASTM A 1003, Structural Grade, Type H, metallic coated, of grade and coating designation as follows:

1. Grade: ST33H.
2. Coating: G60.

B. Steel Sheet for Vertical Deflection Clips: ASTM A 653, structural steel, zinc coated, of grade and coating as follows:

1. Grade: 33.
2. Coating: G60.

2.4 ROOF-RAFTER FRAMING

A. Steel Rafters: Manufacturer's standard C-shaped steel sections, of web depths indicated, with stiffened flanges, and as follows:

1. Minimum Base-Metal Thickness: 0.0677 inch.
2. Flange Width: 2-1/2 inches, minimum.

2.5 FRAMING ACCESSORIES

A. Fabricate steel-framing accessories from ASTM A 1003, Structural Grade, Type H, metallic coated steel sheet, of same grade and coating designation used for framing members.

B. Provide accessories of manufacturer's standard thickness and configuration, unless otherwise indicated, as follows:

1. Supplementary framing.
2. Bracing, bridging, and solid blocking.
3. Web stiffeners.
4. Anchor clips.
5. End clips.
6. Gusset plates.
7. Joist hangers and end closures.
8. Hole-reinforcing plates.
9. Backer plates.

2.6 ANCHORS, CLIPS, AND FASTENERS

A. Steel Shapes and Clips: ASTM A 36, zinc coated by hot-dip process according to ASTM A 123.

B. Power-Actuated Anchors: Fastener systems with working capacity greater than or equal to the design load, according to an evaluation report acceptable to authorities having jurisdiction, based on ICC-ES AC70.

C. Mechanical Fasteners: ASTM C 1513, corrosion-resistant-coated, self-drilling, self-tapping, steel drill screws.

1. Head Type: Low-profile head beneath sheathing; manufacturer's standard elsewhere.

D. Welding Electrodes: Comply with AWS standards.

2.7 MISCELLANEOUS MATERIALS

A. Galvanizing Repair Paint: SSPC-Paint 20.

B. Cement Grout: Portland cement, ASTM C 150, Type I; and clean, natural sand, ASTM C 404. Mix at ratio of 1 part cement to 2-1/2 parts sand, by volume, with minimum water required for placement and hydration.

C. Nonmetallic, Nonshrink Grout: Factory-packaged, nonmetallic, noncorrosive, nonstaining grout, complying with ASTM C 1107, and with a fluid consistency and 30-minute working time.

D. Shims: Load-bearing, high-density, multimonomer, nonleaching plastic; or cold-formed steel of same grade and metallic coating as framing members supported by shims.

E. Sealer Gaskets: Closed-cell neoprene foam, 1/4 inch thick, selected from manufacturer's standard widths to match width of bottom track or rim track members as required.

2.8 FABRICATION

A. Fabricate cold-formed steel framing and accessories plumb, square, and true to line, and with connections securely fastened, according to referenced AISI's specifications and standards, manufacturer's written instructions, and requirements in this Section.

1. Fabricate framing assemblies using jigs or templates.
2. Cut framing members by sawing or shearing; do not torch cut.
3. Fasten cold-formed steel framing members by welding, screw fastening, clinch fastening, pneumatic pin fastening, or riveting as standard with fabricator. Wire tying of framing members is not permitted.

    a. Comply with AWS D1.3 requirements and procedures for welding, appearance and quality of welds, and methods used in correcting welding work.
    b. Locate mechanical fasteners and install according to Shop Drawings, with screws penetrating joined members by no fewer than three exposed screw threads.

4. Fasten other materials to cold-formed steel framing by welding, bolting, pneumatic pin fastening, or screw fastening, according to Shop Drawings.

B. Reinforce, stiffen, and brace framing assemblies to withstand handling, delivery, and erection stresses. Lift fabricated assemblies by means that prevent damage or permanent distortion.

C. Tolerances: Fabricate assemblies level, plumb, and true to line to a maximum allowable variation of 1/8 inch in 10 feet and as follows:

1. Spacing: Space individual framing members no more than plus or minus 1/8 inch from plan location. Cumulative error shall not exceed minimum fastening requirements of sheathing or other finishing materials.
2. Squareness: Fabricate each cold-formed steel framing assembly to a maximum out-of-square tolerance of 1/8 inch.

PART 3 - EXECUTION

3.1 EXAMINATION

A. Examine substrates, areas, conditions, and abutting structural framing for compliance with requirements for installation tolerances and other conditions affecting performance of the Work.

B. Proceed with installation only after unsatisfactory conditions have been corrected.

3.2 PREPARATION

A. Before sprayed fire-resistive materials are applied, attach continuous angles, supplementary framing, or tracks to structural members indicated to receive sprayed fire-resistive materials.

B. After applying sprayed fire-resistive materials, remove only as much of these materials as needed to complete installation of cold-formed framing without reducing thickness of fire-

resistive materials below that required to obtain fire-resistance ratings indicated. Protect remaining fire-resistive materials from damage.

3.3 INSTALLATION, GENERAL

A. Cold-formed steel framing may be shop or field fabricated for installation, or it may be field assembled.

B. Install cold-formed steel framing according to AISI S200, AISI S202, and manufacturer's written instructions unless more stringent requirements are indicated.

C. Install shop- or field-fabricated, cold-formed framing and securely anchor to supporting structure.

D. Install cold-formed steel framing and accessories plumb, square, and true to line, and with connections securely fastened.

1. Cut framing members by sawing or shearing; do not torch cut.
2. Fasten cold-formed steel framing members by welding, screw fastening, clinch fastening, or riveting. Wire tying of framing members is not permitted.

    a. Comply with AWS D1.3 requirements and procedures for welding, appearance and quality of welds, and methods used in correcting welding work.
    b. Locate mechanical fasteners, install according to Shop Drawings, and comply with requirements for spacing, edge distances, and screw penetration.

E. Install framing members in one-piece lengths unless splice connections are indicated for track or tension members.

F. Install temporary bracing and supports to secure framing and support loads equal to those for which structure was designed. Maintain braces and supports in place, undisturbed, until entire integrated supporting structure has been completed and permanent connections to framing are secured.

G. Do not bridge building expansion joints with cold-formed steel framing. Independently frame both sides of joints.

H. Install insulation, specified in Section 072100 "Thermal Insulation," in framing-assembly members, such as headers, sills, boxed joists, and multiple studs at openings, that are inaccessible on completion of framing work.

I. Fasten hole-reinforcing plate over web penetrations that exceed size of manufacturer's approved or standard punched openings.

3.4 JOIST INSTALLATION

A. Install perimeter joist track sized to match joists. Align and securely anchor or fasten track to supporting structure at corners, ends, and spacings indicated on Shop Drawings.

B. Install joists bearing on supporting frame, level, straight, and plumb; adjust to final position, brace, and reinforce. Fasten joists to both flanges of joist track.

1. Install joists over supporting frame with a minimum end bearing of 1-1/2 inches.
2. Reinforce ends and bearing points of joists with web stiffeners, end clips, joist hangers, steel clip angles, or steel-stud sections.

C. Space joists as follows:

1. Joist Spacing: As indicated on Drawings.

D. Install joist reinforcement at interior supports with single, short length of joist section located directly over interior support, with lapped joists of equal length to joist reinforcement.

1. Install web stiffeners to transfer axial loads of walls above.

E. Secure joists to load-bearing interior walls to prevent lateral movement of bottom flange.

F. Install miscellaneous joist framing and connections, including web stiffeners, closure pieces, clip angles, continuous angles, hold-down angles, anchors, and fasteners, to provide a complete and stable joist-framing assembly.

3.5 ERECTION TOLERANCES

A. Install cold-formed steel framing level, plumb, and true to line to a maximum allowable tolerance variation of 1/8 inch in 10 feet and as follows:

1. Space individual framing members no more than plus or minus 1/8 inch from plan location. Cumulative error shall not exceed minimum fastening requirements of sheathing or other finishing materials.

3.6 FIELD QUALITY CONTROL

A. Testing: Owner will engage a qualified independent testing and inspecting agency to perform field tests and inspections and prepare test reports.

B. Field and shop welds will be subject to testing and inspecting.

C. Testing agency will report test results promptly and in writing to Contractor and Architect.

D. Cold-formed steel framing will be considered defective if it does not pass tests and inspections.

E. Additional testing and inspecting, at Contractor's expense, will be performed to determine compliance of replaced or additional work with specified requirements.

3.7 REPAIRS AND PROTECTION

A. Galvanizing Repairs: Prepare and repair damaged galvanized coatings on fabricated and installed cold-formed steel framing with galvanized repair paint according to ASTM A 780 and manufacturer's written instructions.

B. Provide final protection and maintain conditions, in a manner acceptable to manufacturer and Installer, that ensure that cold-formed steel framing is without damage or deterioration at time of Substantial Completion.

END OF SECTION

SECTION 05 50 00 - METAL FABRICATIONS

PART 1 GENERAL

1.1 SUMMARY

A. Section includes shop fabricated metal items.
   1. Lintels.
   2. Structural supports for miscellaneous attachments.

B. Related Sections:
   1. Section 03 30 00 - Cast-In-Place Concrete: Execution requirements for embedded anchors and attachments for metal fabrications specified by this section in concrete.
   2. Section 04 20 00 - Unit Masonry: Execution requirements for embedded anchors and attachments for metal fabrications specified by this section in masonry.
   3. Section 05 31 00 – Steel Decking: Bearing plates and angles for metal deck bearing, including anchorage.
   4. Section 09 90 00 - Painting and Coating: Field applied paint finish.

1.2 REFERENCES

A. Aluminum Association:
   1. AA DAF-45 - Designation System for Aluminum Finishes.

B. American National Standards Institute:
   1. ANSI A14.3 - Ladders - Fixed - Safety Requirements

C. ASTM International:
   1. ASTM A36/A36M - Standard Specification for Carbon Structural Steel.
   2. ASTM A53/A53M - Standard Specification for Pipe, Steel, Black and Hot-Dipped, Zinc-Coated, Welded and Seamless.
   3. ASTM A123/A123M - Standard Specification for Zinc (Hot-Dip Galvanized) Coatings on Iron and Steel Products.
   4. ASTM A153/A153M - Standard Specification for Zinc Coating (Hot-Dip) on Iron and Steel Hardware.
   5. ASTM A276 - Standard Specification for Stainless Steel Bars and Shapes.
   6. ASTM A297/A297M - Standard Specification for Steel Castings, Iron-Chromium and Iron-Chromium-Nickel, Heat Resistant, for General Application.
   7. ASTM A307 - Standard Specification for Carbon Steel Bolts and Studs, 60 000 PSI Tensile Strength.
   8. ASTM A325 - Standard Specification for Structural Bolts, Steel, Heat Treated, 120/105 ksi Minimum Tensile Strength.
   9. ASTM A354 - Standard Specification for Quenched and Tempered Alloy Steel Bolts, Studs, and Other Externally Threaded Fasteners.
   10. ASTM A500/A500M - Standard Specification for Cold-Formed Welded and Seamless Carbon Steel Structural Tubing in Rounds and Shapes.

11. ASTM A501 - Standard Specification for Hot-Formed Welded and Seamless Carbon Steel Structural Tubing.
12. ASTM A554 - Standard Specification for Welded Stainless Steel Mechanical Tubing.
13. ASTM A563 - Standard Specification for Carbon and Alloy Steel Nuts.
14. ASTM A653/A653M - Standard Specification for Steel Sheet, Zinc-Coated (Galvanized) or Zinc-Iron Alloy-Coated (Galvannealed) by the Hot-Dip Process
15. ASTM A992/A992M - Standard Specification for Structural Steel Shapes.
16. ASTM B26/B26M - Standard Specification for Aluminum-Alloy Sand Castings.
17. ASTM B209 - Standard Specification for Aluminum and Aluminum-Alloy Sheet and Plate.
18. ASTM B210 - Standard Specification for Aluminum and Aluminum-Alloy Drawn Seamless Tubes.
19. ASTM B211 - Standard Specification for Aluminum and Aluminum-Alloy Bar, Rod, and Wire.
20. ASTM B221 - Standard Specification for Aluminum and Aluminum-Alloy Extruded Bars, Rods, Wire, Profiles, and Tubes.
21. ASTM F436 - Standard Specification for Hardened Steel Washers.
22. ASTM F1554 - Standard Specification for Anchor Bolts, Steel, 36, 55, and 105-ksi Yield Strength.

D. American Welding Society:
1. AWS A2.4 - Standard Symbols for Welding, Brazing, and Nondestructive Examination.
2. AWS D1.1 - Structural Welding Code - Steel.
3. AWS D1.6 - Structural Welding Code - Stainless Steel.

E. National Ornamental & Miscellaneous Metals Association:
1. NOMMA Guideline 1 - Joint Finishes.

F. SSPC: The Society for Protective Coatings:
1. SSPC - Steel Structures Painting Manual.
2. SSPC SP 1 - Solvent Cleaning.
3. SSPC SP 10 - Near-White Blast Cleaning.
4. SSPC Paint 15 - Steel Joist Shop Paint.

1.3 SUBMITTALS

A. Section 01 33 00 - Submittal Procedures: Submittal requirements.

B. Shop Drawings: Indicate profiles, sizes, connection attachments, reinforcing, anchorage, size and type of fasteners, and accessories. Include erection drawings, elevations, and details where applicable. Indicate welded connections using standard AWS A2.0 welding symbols. Indicate net weld lengths.

C. Welders Certificates: Certify welders employed on the Work, verifying AWS qualification within previous 12 months.

1.4 QUALITY ASSURANCE

A. Finish joints in accordance with NOMMA Guideline 1.

1.5 DELIVERY, STORAGE, AND HANDLING

A. Section 01 60 00 - Product Requirements: Product storage and handling requirements.

B. Accept metal fabrications on site in labeled shipments. Inspect for damage.

C. Protect metal fabrications from damage by exposure to weather.

1.6 FIELD MEASUREMENTS

A. Verify field measurements are as indicated on shop drawings, and ad instructed by manufacturer.

PART 2 PRODUCTS

2.1 MATERIALS - STEEL

A. Ferrous Metals: For fabrication of miscellaneous metal work that will be exposed to view, use only materials that are smooth and free of surface blemishes including pitting, seam marks, roller marks, rolled trade names and roughness.
   1. Steel Plates, Shapes, and Bars: ASTM 36.
   2. Steel Bar Grating: ASTM A569 and ASTM A36.
   3. Structural Steel Sheet: Hot-rolled, ASTM A570, or cold-rolled ASTM A611, Class 1, of grade required for design loading.
   4. Galvanized Structural Steel Sheet: ASTM A446, of grade required for design loading. Coating designation as indicated, or if not indicated, G90.
   5. Steel Pipe: ASTM A53; type and grade (if applicable) as selected by fabricator and as required for design loading; black finish unless galvanized is indicated; standard weight (Schedule 40), unless otherwise indicated.
   6. W-Shapes: ASTM A992

B. Concrete Inserts: Threaded or wedge type; galvanized ferrous castings, either malleable iron, ASTM A47, or cast steel ASTM A27. Provide bolts, washers and shims as required, hot dip galvanized, ASTM A153.

C. Provide zinc-coated fasteners for exterior use or where built into exterior walls. Select fasteners for type, grade and class required.

D. Bolts and Nuts: Regular hexagon head type, ASTM A307, Grade A. Galvanized to ASTM A153 for galvanized components.

E. Machine Screws: Cadmium plated steel, FS FF-S-92.

F. Wood Screws: Flat head carbon steel, FS FF-S-111.

G. Plain Washers: Round, carbon steel, FS FF-W-92.

H. Masonry Anchorage Devices: Expansion shields, FS FF-S-325.

I. Toggle Bolts: Tumble-wing type, FS FF-B-588, type, class and style as required.

J. Lock Washers: Helical spring type carbon steel, FS FF-W-84.

K. Shop Primer for Ferrous Metal:
   1. Manufacturer's or Fabricator's standard, fast curing, lead-free, "universal" primer; selected for good resistance to normal atmospheric corrosion, for compatibility with finish paint systems indicated and for capability to provide a sound foundation for field-applied topcoats despite prolonged exposure; complying with performance requirements of FS TT-P-645. Apply at 2.0 dry mil minimum to interior steel surfaces (SSPC zone 1A).
   2. Tnemec 90-97 Tmeme Zinc metal primer applied at 2.5 to 3.0 dry mils. Apply to exterior steel surfaces (SSPC on 1B).

L. Welding Materials: AWS D1.1; type required for materials being welded.

M. Touch-Up Primer for Galvanized Surfaces: SSPC Paint 20 Type II Organic zinc rich.

2.2 LINTELS

A. Lintels: Steel sections, size and configuration as indicated on Drawings.
   1. Exterior Locations: Galvanized. Finish paint.
   2. Interior Locations: Prime paint. Finish paint.

2.3 STRUCTURAL SUPPORTS

A. Other Structural Supports: Steel sections, shape and size as indicated on Drawings, required to support applied loads with maximum deflection of 1/240 of the span; prime paint, one coat.

2.4 FABRICATION

A. Fit and shop assemble items in largest practical sections, for delivery to site.

B. Fabricate items with joints tightly fitted and secured.

C. Continuously seal joined members by continuous welds.

D. Grind exposed joints flush and smooth with adjacent finish surface. Make exposed joints butt tight, flush, and hairline. Ease exposed edges to small uniform radius.

E. Exposed Mechanical Fastenings: Flush countersunk screws or bolts; unobtrusively located; consistent with design of component, except where specifically noted otherwise.

F. Supply components required for anchorage of fabrications. Fabricate anchors and related components of same material and finish as fabrication, except where specifically noted otherwise.

2.5 FACTORY APPLIED FINISHES - STEEL

A. Clean surfaces of rust, scale, grease, and foreign matter prior to finishing.

B. Do not prime surfaces in direct contact with concrete or where field welding is required.

C. Prime paint items with one coat except where galvanizing is specified.

D. Galvanizing: ASTM A123; hot dip galvanize afeeter fabrication.

E. Galvanizing for Fasteners, Connectors, and Anchors:
   1. Hot-Dipped Galvanizing: ASTM A153/A153M.
   2. Mechanical Galvanizing: ASTM B695; Class 50 minimum.

2.6 FABRICATION TOLERANCES

A. Squareness: 1/8 inch maximum difference in diagonal measurements.

B. Maximum Offset Between Faces: 1/16 inch.

C. Maximum Misalignment of Adjacent Members: 1/16 inch.

D. Maximum Bow: 1/8 inch in 48 inches.

E. Maximum Deviation From Plane: 1/16 inch in 48 inches.

PART 3 EXECUTION

3.1 EXAMINATION

A. Section 01 30 00 - Administrative Requirements: Coordination and project conditions.

B. Verify field conditions are acceptable and are ready to receive Work.

3.2 PREPARATION

A. Clean and strip primed steel items to bare metal where site welding is required.

B. Supply steel items required to be cast into concrete or embedded in masonry with setting templates to appropriate sections.

3.3 INSTALLATION

A. Install items plumb and level, accurately fitted, free from distortion or defects.

B. Make provisions for erection stresses. Install temporary bracing to maintain alignment, until permanent bracing and attachments are installed.

C. Field weld components indicated on Drawings and shop drawings. Perform field welding in accordance with AWS D1.1.

D. Field connect members with threaded fasteners; torque to required resistance.

E. Obtain approval of Architect/Engineer prior to site cutting or making adjustments not scheduled.

F. After erection, touch up welds, abrasions, and damaged finishes with prime paint or galvanizing repair paint to match shop finishes.

G. Install steel lintels at all mechanical openings through walls.

3.4 ERECTION TOLERANCES

A. Section 01 40 00 - Quality Requirements: Tolerances.

B. Maximum Variation From Plumb: 1/4 inch per story or for every 12 feet in height whichever is greater, non-cumulative.

C. Maximum Offset From Alignment: 1/4 inch.

D. Maximum Out-of-Position: 1/4 inch.

3.5 FIELD QUALITY CONTROL

A. Welding: Inspect welds in accordance with AWS D1.1.

B. Contractor shall retain an independent third party for testing and inspection services. Services shall include bolted and welded connections.

END OF SECTION

SECTION 05 52 00

METAL RAILINGS

PART 1 GENERAL

1.1 SUMMARY

A. Section includes steel pipe handrails and guardrails.

B. Related Sections:
1. Section 03 30 00 - Cast-In-Place Concrete: Execution requirements for placement of anchors specified in this section in concrete.
2. Section 09 90 00 - Painting and Coating: Paint finish.

1.2 REFERENCES

A. ASTM International:
1. ASTM A53/A53M - Standard Specification for Pipe, Steel, Black and Hot-Dipped, Zinc-Coated, Welded and Seamless.
2. ASTM A123/A123M - Standard Specification for Zinc (Hot-Dip Galvanized) Coatings on Iron and Steel Products.
3. ASTM A500 - Standard Specification for Cold-Formed Welded and Seamless Carbon Steel Structural Tubing in Rounds and Shapes.
4. ASTM A501 - Standard Specification for Hot-Formed Welded and Seamless Carbon Steel Structural Tubing.
5. ASTM A513 - Standard Specification for Electric-Resistance-Welded Carbon and Alloy Steel Mechanical Tubing.
6. ASTM B177 - Standard Guide for Chromium Electroplating on Steel for Engineering Use.
7. ASTM E935 - Standard Test Methods for Performance of Permanent Metal Railing Systems and Rails for Buildings.

B. National Ornamental & Miscellaneous Metals Association:
1. NOMMA Guideline 1 - Joint Finishes.

C. SSPC: The Society for Protective Coatings:
1. SSPC - Steel Structures Painting Manual.
2. SSPC Paint 15 - Steel Joist Shop Paint.
3. SSPC Paint 20 - Zinc-Rich Primers (Type I - Inorganic and Type II - Organic).

1.3 DESIGN REQUIREMENTS

A. Design handrail, guardrail, and attachments to resist a concentrated load of 200 pounds in accordance with 4.5.1 of ASCE 7.

B. Design intermediate rails, balusters, panel fillers and attachments to resist a concentrated load of 50 pounds in accordance with 4.5.1 of ASCE 7.

1.4 SUBMITTALS

A. Section 01 33 00 - Submittal Procedures: Submittal requirements.

B. Shop Drawings: Indicate profiles, sizes, connection attachments, anchorage, size and type of fasteners, and accessories.

1.5 QUALITY ASSURANCE

A. Finish joints in accordance with NOMMA Guideline 1.

1.6 FIELD MEASUREMENTS

A. Verify field measurements prior to fabrication.

PART 2 PRODUCTS

2.1 STEEL RAILING SYSTEM COMPONENTS

A. Pipe: ASTM A53, Grade B, Schedule 40.

B. Rails and Posts: 1 ½ inch diameter steel pipe; welded joints.

C. Fittings: Elbows, T-shapes, wall brackets, escutcheons; cast or machined steel.

D. Mounting: Adjustable brackets and flanges, with steel inserts for casting in concrete.

E. Exposed Fasteners: Flush countersunk screws or bolts; consistent with design of railing.

F. Splice Connectors: Steel concealed spigots and welding collars.

G. Shop and Touch-Up Primer: SSPC Paint 15, Type 1, red oxide.

2.3 FABRICATION

A. Fit and shop assemble components in largest practical sizes for delivery to site.

B. Fabricate components with joints tightly fitted and secured. Furnish spigots and sleeves to accommodate site assembly and installation.

C. Exposed Mechanical Fastenings: Flush countersunk screws or bolts; unobtrusively located; consistent with design of component, except where specifically noted otherwise.

D. Supply components required for anchorage of fabrications. Fabricate anchors and related components of same material and finish as fabrication, except where specifically noted otherwise.

E. Grind exposed joints flush and smooth with adjacent finish surface. Make exposed joints butt tight, flush, and hairline. Ease exposed edges to small uniform radius.

F. Accurately form components to suit ramps and landings, to each other and to building structure.

G. Accommodate for expansion and contraction of members and building movement without damage to connections or members.

2.4 SHOP FINISHING

A. Preparation for Shop Priming: Prepare uncoated ferrous-metal surfaces to be primed in accordance with SSPC SP 2.

B. Apply shop primer to uncoated surfaces.
   1. Do not prime surfaces in direct contact with concrete or where field welding is required.
   2. Shop prime one coat, SSPC Paint 15, Type 1, red oxide.

C. Refer to section 09 90 00 for field painting.

PART 3 EXECUTION

3.1 EXAMINATION

A. Section 01 30 00 - Administrative Requirements: Coordination and project conditions.

B. Verify field conditions are acceptable and are ready to receive work.

C. Verify concealed blocking and reinforcement is installed and correctly located to receive wall mounted handrails.

3.2 PREPARATION

A. Clean and strip primed steel items to bare metal where site welding is required.

B. Supply items required to be cast into concrete, embedded in masonry or placed in partitions with setting templates, to appropriate sections.

3.3 INSTALLATION

A. Install components plumb and level, accurately fitted, free from distortion or defects.

B. Anchor railings to structure with anchors, plates or angles.

C. Field weld anchors as indicated on shop drawings. Touch-up welds with primer. Grind welds smooth.

D. Conceal bolts and screws whenever possible. Where not concealed, use flush countersunk fastenings.

E. Assemble with spigots and sleeves to accommodate tight joints and secure installation.

3.4 ERECTION TOLERANCES

A. Section 01 40 00 - Quality Requirements: Tolerances.

B. Maximum Variation From Plumb: 1/4 inch per story, non-cumulative.

C. Maximum Offset From Alignment: 1/4 inch.

D. Maximum Out-of-Position: 1/4 inch.

END OF SECTION

SECTION 06 10 00 - ROUGH CARPENTRY

PART 1 GENERAL

1.1 SUMMARY

A. Section includes blocking in wall and roof openings; wood furring and grounds; and preservative treatment of wood; and temporary wood blocking support.

B. Related Sections:
1. Section 04 20 00 - Unit Masonry: Masonry openings to receive wood blocking.
2. Division 8 – Openings: Window and door openings to receive wood blocking.

1.2 REFERENCES

A. American National Standards Institute:
1. ANSI A208.1 - Mat-Formed Wood Particleboard.

B. American Wood-Preservers' Association:
1. AWPA C1 - All Timber Products - Preservative Treatment by Pressure Process.
2. AWPA C20 - Structural Lumber - Fire-Retardant Treatment by Pressure Processes.

C. ASTM International:
1. ASTM E84 - Standard Test Method for Surface Burning Characteristics of Building Materials.

D. National Fire Protection Association:
1. NFPA 255 - Standard Method of Test of Surface Burning Characteristics of Building Materials.

E. The Redwood Inspection Service:
1. RIS - Standard Specifications for Grades of California Redwood Lumber.

F. Southern Pine Inspection Bureau:
1. SPIB - Standard Grading Rules for Southern Pine Lumber.

G. Underwriters Laboratories Inc.:
1. UL 723 - Tests for Surface Burning Characteristics of Building Materials.

H. U. S Department of Commerce National Institute of Standards and Technology:
1. DOC PS 1 - Construction and Industrial Plywood.
2. DOC PS 2 - Performance Standard for Wood-Based Structural-Use Panels.
3. DOC PS 20 - American Softwood Lumber Standard.

I. West Coast Lumber Inspection Bureau:
1. WCLIB - Standard Grading Rules for West Coast Lumber.

J. Western Wood Products Association:
   1. WWPA G-5 - Western Lumber Grading Rules.

1.3 SUBMITTALS

A. Section 01 33 00 - Submittal Procedures: Submittal procedures.

B. Product Data: Submit technical data on wood preservative and fire retardant treatment materials and application instructions.

1.4 QUALITY ASSURANCE

A. Perform Work in accordance with the following:
   1. Lumber Grading Agency: Certified by DOC PS 20.
   2. Wood Structural Panel Grading Agency: Certified by EWA - The Engineered Wood Association.
   3. Lumber: DOC PS 20.
   4. Wood Structural Panels: DOC PS 1 or DOC PS 2.

B. Surface Burning Characteristics:
   1. Fire Retardant Treated Materials: Maximum 25/450 flame spread/smoke developed index when tested in accordance with ASTM E84 NFPA 255 UL 723.

C. Apply label from agency approved by authority having jurisdiction to identify each preservative treated and fire retardant treated material.

PART 2 PRODUCTS

2.1 MATERIALS

A. Lumber Grading Rules: AP&PA. SPIB. WCLIB.

B. Miscellaneous Framing: Stress Group D, S/P/F, species, grade 19 percent maximum moisture content after treatment, pressure preservative treat.

C. Plywood: APA/EWA Rated Sheathing Structural I, Grade C-D; Exposure Durability 2; unsanded.

2.2 ACCESSORIES

A. Fasteners and Anchors:
   1. Fasteners: Hot dipped galvanized steel for high humidity and treated wood locations, unfinished steel elsewhere.
   2. Nails and Staples: ASTM F1667.
   3. Anchors: Toggle bolt type for anchorage to hollow masonry. Expansion shield and lag bolt type for anchorage to solid masonry or concrete. Bolt or ballistic fastener for anchorages to steel.

2.3 FACTORY WOOD TREATMENT

A. Wood Preservative (Pressure Treatment): AWPA C1 using water borne preservative with 0.25 percent retainage.

B. Fire Retardant Treatment: Pressure treatment, AWPA C20 for lumber and AWPA C27 for plywood, Interior Type, chemically treated and pressure impregnated; capable of providing a maximum flame spread/smoke development of 25/450.

C. Moisture Content After Treatment:
   1. Lumber: Maximum 19 percent.
   2. Structural Panels: Maximum 15 percent.

PART 3 EXECUTION

3.1 EXAMINATION

A. Section 01 30 00 - Administrative Requirements: Verification of existing conditions before starting work.

B. Verify substrate conditions are ready to receive blocking, curbing and framing.

3.2 PREPARATION

A. Coordinate placement of blocking, curbing and framing items.

3.3 INSTALLATION

A. Set members level and plumb, in correct position.

B. Place horizontal members, crown side up.

C. Construct curb members of solid wood sections.

D. Curb roof openings except where prefabricated curbs are provided. Form corners by alternating lapping side members.

3.4 SITE APPLIED WOOD TREATMENT

A. Apply preservative treatment.

B. Brush apply two coats of preservative treatment on wood in contact with cementitious materials, roofing and related metal flashings and treat site-sawn cuts.

C. Allow preservative to dry prior to erecting members.

3.5 SCHEDULES

A. Roof Blocking: S/P/F species, 19 percent maximum moisture content, pressure preservative treatment.

END OF SECTION

SECTION 07 17 00 - BENTONITE WATERPROOFING

PART 1 - GENERAL

1.1 SUMMARY

A. Section Includes:
   1. Bentonite clay waterproofing in panel form.

B. Related Requirements:
   1. Section 07 21 13 - Board Insulation: Rigid insulation protective cover.

1.2 REFERENCE STANDARDS

A. National Roofing Contractors Association:
   1. NRCA - The NRCA Waterproofing Manual.

1.3 SUBMITTALS

A. Section 01 33 00 - Submittal Procedures: Requirements for submittals.

B. Product Data: Submit product criteria, characteristics, accessories, jointing and seaming methods, and termination conditions.

C. Shop Drawings: Indicate details and locations of required flashings, control and expansion joints, sealing at openings and waterproofing of holes, slots, and sleeves.

D. Manufacturer's Certificate: Certify that products meet or exceed specified requirements.

E. Manufacturer's Instructions: Submit special preparation of substrate, panel attachment methods, and perimeter conditions requiring attention.

F. Field Quality-Control Submittals: Indicate results of Contractor-furnished tests and inspections.

G. Qualifications Statements:
   1. Submit qualifications for manufacturer and installer.
   2. Submit manufacturer's approval of installer.

1.4 QUALITY ASSURANCE

A. Perform Work according to NRCA Waterproofing Manual.

1.5 QUALIFICATIONS

A. Manufacturer: Company specializing in manufacturing products specified in this Section with minimum three years' documented experience.

B. Installer: Company specializing in performing Work of this Section with minimum three years' documented experience and approved by manufacturer.

1.6 DELIVERY, STORAGE, AND HANDLING

A. Section 01 60 00 - Product Requirements: Requirements for transporting, handling, storing, and protecting products.

B. Deliver materials in manufacturer's packaging, including application instructions.

C. Maintain bentonite products dry.

D. Protection: Protect with waterproof cover. Store on blocking to prevent ground moisture contact.

E. Maintain minimum ambient storage temperatures of 40 degrees F for bentonite gel products.

1.7 AMBIENT CONDITIONS

A. Section 01 50 00 - Temporary Facilities and Controls: Requirements for ambient condition control facilities for product storage and installation.

B. Maintain ambient temperatures above 40 degrees F for 24 hours before and during application.

1.8 EXISTING CONDITIONS

A. Field Measurements: Verify field measurements of surfaces scheduled for waterproofing prior to installation.

1.9 WARRANTY

A. Section 01 70 00 - Execution and Closeout Requirements: Requirements for warranties.

B. Furnish two-year installer's warranty for waterproofing failing to resist penetration of water.

C. Furnish 10-year manufacturer's warranty for waterproofing failing to resist penetration of water.

D. For warranty repair work, remove and replace materials concealing waterproofing.

PART 2 - PRODUCTS

2.1 MATERIALS

A. Bentonite: Granulated, pure, dry, self-expanding bentonite clay comprised of 90 percent minimum sodium montmorillonite; 90 percent minimum passing No. 20 mesh sieve and 10 percent maximum passing No. 200 mesh sieve.

B. Single Panels: Single corrugated core, smooth-faced kraft paper panels, core filled with self-expanding bentonite clay granules:
   1. Nominal Panel Size: 48 by 48 by 3/16 inches.
   2. Minimum Bentonite Fill: 1 pound per square foot.

C. Joint Packing: Water-soluble plastic tube filled with bentonite clay granules; 2-inch diameter by 24 inches long.

D. Joint and Detail Mastic: Moist and hydrated bentonite clay gel using water and glycol for below-freezing application and water for above-freezing application.

2.2 ACCESSORIES

A. Fasteners: Galvanized nails.

B. Adhesive: Manufacturer-recommended type.

C. Polyethylene Sheet: 4-mil thick.

D. Flexible Flashings:
   1. Self-adhered type.
   2. Furnished by bentonite panel manufacturer.

E. Protection Board: Rigid insulation as specified in Section 07 21 13 - Board Insulation.

PART 3 - EXECUTION

3.1 EXAMINATION

A. Section 01 70 00 - Execution and Closeout Requirements: Requirements for installation examination.

B. Verify that substrate surfaces are smooth and durable and are free of frozen matter, standing water, or foreign matter detrimental to application of waterproofing system.

C. Verify that items penetrating surfaces to receive waterproofing are securely installed.

3.2 PREPARATION

A. Section 01 70 00 - Execution and Closeout Requirements: Requirements for installation preparation.

B. Clean and prepare surfaces to receive waterproofing.

C. Remove concrete fins, projections, and form ties.

D. Fill holes, cracks, honeycombs, and voids with non-shrink cementitious grout; trowel level with monolithic wall surface.

E. Seal construction joints and grouted holes / voids with joint and detail mastic, minimum 1/8 inch thick and extending 3 inches beyond joints and filled holes / voids.

F. Seal all vertical inside corners with continuous 3/4-inch fillet of joint and detail mastic.

3.3 INSTALLATION

A. Vertical Surfaces:
   1. Apply single layer of bentonite panels with adhesive, starting at base of foundation.
   2. Fold and secure panels around corners with vertical corrugations; secure unfolded panels with horizontal corrugations.
   3. Cut panels at bottom to lap minimum 9 inches onto surface of footing.
   4. Lap adjoining panels 1-1/2 inches; lap horizontal joints shingle-style.
   5. Stagger vertical joints at mid-panel on succeeding courses.
   6. Cut panels parallel to corrugations to prevent bentonite loss.
   7. Place joint packing continuous at termination of panels and at protrusions or penetrations; secure to prevent movement.
   8. Termination:
      a. Terminate panels 4 inches below finish grade elevation.
      b. Apply continuous strip of manufacturer's self-adhered flashing membrane and detail mastic over top edge of bentonite panel, lapped 4 inches at end joints and over top of bentonite panels.

B. Accessories:
   1. Joint Packing:
      a. Install joint packing tubes in continuous line over bentonite panel joint at intersection of vertical and horizontal surfaces.
      b. Temporarily secure in place in preparation for backfill.
   2. Place protection board directly against membrane; butt joints.
   3. Attach protection board to substrate with mastic; scribe and cut boards around projections, penetrations, and interruptions.

3.4 PROTECTION

A. Section 01 70 00 - Execution and Closeout Requirements: Requirements for protecting finished Work.

B. Do not permit traffic over unprotected or uncovered waterproofing.

C. Temporary Sheeting:
   1. Protect installed waterproofing from precipitation or ground water with temporary polyethylene sheeting.
   2. When backfilling begins, remove sheeting.

END OF SECTION

SECTION 07 21 13 - BOARD INSULATION

PART 1 GENERAL

1.1 SUMMARY

A. Section Includes:
   1. Rigid board insulation.

1.2 REFERENCE STANDARDS

A. ASTM International:
   1. ASTM C240 - Standard Test Methods of Testing Cellular Glass Insulation Block.
   2. ASTM C552 - Standard Specification for Cellular Glass Thermal Insulation.
   3. ASTM C578 - Standard Specification for Rigid, Cellular Polystyrene Thermal Insulation.
   4. ASTM C612 - Standard Specification for Mineral Fiber Block and Board Thermal Insulation.
   5. ASTM C1289 - Standard Specification for Faced Rigid Cellular Polyisocyanurate Thermal Insulation Board.
   6. ASTM D2842 - Standard Test Method for Water Absorption of Rigid Cellular Plastics.
   7. ASTM E84 - Standard Test Method for Surface Burning Characteristics of Building Materials.
   8. ASTM E970 - Standard Test Method for Critical Radiant Flux of Exposed Attic Floor Insulation Using a Radiant Heat Energy Source.

B. South Coast Air Quality Management District:
   1. SCAQMD Rule 1168 - Adhesive and Sealant Applications.

1.3 SUBMITTALS

A. Section 01 33 00 - Submittal Procedures: Requirements for submittals.

B. Product Data: Submit manufacturer information on product characteristics, performance criteria, limitations, and adhesives.

C. Manufacturer's Certificate: Certify that products meet or exceed specified requirements.

D. Manufacturer Instructions: Submit detailed instructions on installation requirements, including storage and handling procedures.

E. Qualifications Statement:
   1. Submit qualifications for manufacturer.

1.4 QUALITY ASSURANCE

A. Surface Burning Characteristics of Insulation Installed in Concealed Locations:
   1. Foam Plastic Insulation: Maximum 75/450 flame-spread/smoke-developed index when tested according to ASTM E84.
   2. Other Insulation: Maximum 25/450 flame-spread/smoke-developed index when tested according to ASTM E84.

B. Surface Burning Characteristics of Insulation Installed in Exposed Locations:
   1. Maximum 25/450 flame-spread/smoke-developed index when tested according to ASTM E84.

C. Apply label from agency approved by authority having jurisdiction to identify each foam plastic insulation board.

1.5 QUALIFICATIONS

A. Manufacturer: Company specializing in manufacturing products specified in this Section with minimum five years documented experience.

1.6 DELIVERY, STORAGE, AND HANDLING

A. Section 01 60 00 - Product Requirements: Requirements for transporting, handling, storing, and protecting products.

B. Inspection: Accept materials on Site in manufacturer's original packaging and inspect for damage.

C. Store according to manufacturer instructions.

D. Protection:
   1. Protect materials from moisture and dust by storing in clean, dry location remote from construction operations areas.
   2. Remove insulation that becomes wet or damp.
   3. Provide additional protection according to manufacturer instructions.

1.7 AMBIENT CONDITIONS

A. Section 01 50 00 - Temporary Facilities and Controls: Requirements for ambient condition control facilities for product storage and installation.

B. Minimum Conditions: Do not install adhesives when temperature or weather conditions are detrimental to successful installation.

PART 2 PRODUCTS

2.1 BOARD INSULATION

A. Manufacturers:
1. DiversiFoam Products.
2. Dow Chemical Company.
3. Henry Company.
4. Johns Manville.
5. Owens Corning.
6. Rmax, Inc.
7. Tenneco Company.
8. Substitutions: None Permitted.

2.2 MATERIALS

A. Molded polystyrene insulation “Bead Board” shall not be acceptable.

B. Wall Insulation: ASTMC578, Type VI, extruded polystyrene insulation with the following characteristics:
1. Board Density: 2.0 pounds per cubic foot nominal.
2. Board Size: 24 by 96 inches.
3. Compressive Strength: 25 pounds per square inch minimum.
4. Board Thickness: 2 inches.
5. Thermal Resistance R-Value: 5 per inch of thickness minimum.
6. Water Absorption:
   a. Comply with ASTM D2842.
   b. Maximum: 0.3 percent by volume.
7. Board Edges: Square.

2.3 ACCESSORIES

A. Adhesive: Type as recommended by insulation manufacturer for application.

B. Tape: Mesh reinforced type as recommended by insulation manufacturer for application.

C. Insulation Fasteners:
1. Description: Impaling pins or clips of plastic or nylon with washer retainer and clips, to be adhered or mechanically fastened to surface to receive board insulation.
2. Length: To suit insulation thickness and substrate.
3. Capable of securely and rigidly fastening insulation in place.

PART 3 EXECUTION

3.1 EXAMINATION

A. Section 01 70 00 - Execution and Closeout Requirements: Requirements for application examination.

B. Verify that substrate, adjacent materials, and insulation boards are dry and ready to receive insulation and adhesive.

C. Verify that substrate surface is flat, free of honeycomb, fins, irregularities, and materials or substances affecting adhesive bond.

3.2 INSTALLATION

A. Foundation Perimeter:
   1. Polyethylene Sheeting:
      a. Adhere strip of polyethylene sheet over construction joints, with double beads of adhesive on each side of joint. Tape to seal joints.
      b. Extend sheet full height of joint.
   2. Apply adhesive in three continuous beads per board length and daub adhesive tight to protrusions.
   3. Foundation Wall:
      a. Install boards on foundation wall and grade beam perimeter.
      b. Place boards in method to maximize contact bedding.
      c. Stagger joints and butt edges and ends tight to protrusions and adjacent board.
   4. Cut and fit insulation tight to protrusions or interruptions to insulation plane.

B. Cavity Walls:
   1. Polyethylene Sheeting:
      a. Adhere strip of polyethylene sheet over construction joints, with double beads of adhesive on each side of joint. Tape to seal joints.
      b. Extend sheet full height of joint.
   2. Secure impale fasteners to substrate at frequency of six per insulation board.
   3. Apply adhesive in three continuous beads per board length, and daub adhesive tight to protrusions to ensure continuity of vapor retarder and air seal.
   4. Install boards horizontally between wall reinforcement.
   5. Place membrane surface facing out and tape-seal board joints.
   6. Place boards in method to maximize contact bedding.
   7. Stagger end joints.
   8. Butt edges and ends tight to adjacent board and protrusions.
   9. Place impaled-type fastener locking discs.
   10. Cut and fit insulation tight to protrusions or interruptions to insulation plane.
   11. Place 6-inch-wide polyethylene sheet at perimeter of wall openings, from adhesive vapor retarder bed to window or door frame, and tape-seal in place to ensure continuity of vapor retarder and air seal.

END OF SECTION

SECTION 07 54 16 - KEE PVC ROOFING - FULLY ADHERED

PART 1 GENERAL

1.1 SUMMARY

A. Section includes fully adhered KEE PVC roofing; field membrane, flashings, cover board, insulation, fasteners, adhesives, related components, and accessories.

B. Related Sections:
1. Section 02 41 19 – Selective Structure Demolition.
2. Section 06 10 00 - Rough Carpentry.
3. Section 07 62 00 - Sheet Metal Flashing and Trim.
4. Section 07 71 00 – Roof Specialties.

1.2 REFERENCES

A. ASTM International:
1. ASTM C1278 – Standard Specification for Fiber-Reinforced Gypsum Panel.
2. ASTM C1289 - Standard Specification for Faced Rigid Cellular Polyisocyanurate Thermal Insulation Board.
3. ASTM C1303 - Standard Test Method for Predicting Long-Term Thermal Resistance of Closed-Cell Foam Insulation.
4. ASTM C1549 - Standard Test Method for Determination of Solar Reflectance Near Ambient Temperature Using a Portable Solar Reflectometer.
5. ASTM D570 - Standard Test Method for Water Absorption of Plastics.
6. ASTM D638 – Standard Test Method for Tensile Properties of Plastics.
7. ASTM D746 - Standard Test Method for Brittleness Temperature of Plastics and Elastomers by Impact.
8. ASTM D751 – Standard Test Methods for Coated Fabrics.
9. ASTM D1149 - Standard Test Methods for Rubber Deterioration-Cracking in an Ozone Controlled Environment.
10. ASTM D1204 - Standard Test Method for Linear Dimensional Changes of Nonrigid Thermoplastic Sheeting or Film at Elevated Temperature.
11. ASTM D2136 – Standard Test Method for Coated Fabrics Low Temperature Bend Test.
12. ASTM D3045 – Standard Practice for Heat Aging of Plastics Without Load.
13. ASTM D4434 - Standard Specification for Poly (Vinyl Chloride) Sheet Roofing.
14. ASTM D4601 – Standard Specification for Asphalt Coated Glass Fiber Base Sheet Used in Roofing.
15. ASTM D6754 – Standard Specification for Ketone Ethylene Ester Based Sheet Roofing.
16. ASTM E84 - Standard Test Method for Surface Burning Characteristics of Building Materials.
17. ASTM E96/E96M - Standard Test Methods for Water Vapor Transmission of Materials.
18. ASTM E108 - Standard Test Methods for Fire Tests of Roof Coverings.
19. ASTM E119 - Standard Test Methods for Fire Tests of Building Construction and Materials.

B. National Roofing Contractors Association:
   1. NRCA - The NRCA Roofing and Waterproofing Manual.

C. Single Ply Roofing Institute:
   1. SPRI ES-1 - Wind Design Standard for Edge Systems Used with Low Slope Roofing Systems.

D. Underwriters Laboratories Inc.:
   1. UL - Fire Resistance Directory.
   2. UL 790 - Tests for Fire Resistance of Roof Covering Materials.
   3. UL 1256 - Fire Test of Roof Deck Construction.
   4. UL 1897 - Uplift Tests for Roof Covering Systems.

E. U.S. Environmental Protection Agency:
   1. ENERGY STAR - ENERGY STAR Voluntary Labeling Program.

1.3 SYSTEM DESCRIPTION

A. Roofing Membrane: white single-ply fleece-backed thermoplastic; KEE PVC membrane comprised of PolyVinyl Chloride (PVC) and Ketone Ethylene Ester (KEE) reinforced with a internal fabric and complete with a wick resistant non-woven polyester fleece backing; meeting ASTM D6754 or ASTM D4434 Type III; fully adhered with cold-adhesive.

1.4 DESIGN REQUIREMENTS

A. Low Slope Membrane Roof Edge Securement: Conform to SPRI ES-1 for wind speeds determined from applicable code.

1.5 PERFORMANCE REQUIREMENTS

A. Roof Assembly Classifications:
   1. Windstorm Classification: UL Class 90.
   2. Exterior Fire Test Exposure: ASTM E 108 or UL 790, Class A; for application and roof slopes indicated; testing by a qualified testing agency. Identify products with appropriate markings of applicable testing agency.

1.6 SUBMITTALS

A. Section 01 33 00 - Submittal Procedures: Submittal procedures.

B. Shop Drawings: Indicate technical acceptance / approval by the roof system manufacturer. Indicate joint, termination, and penetration detail conditions and flashings, and conditions of interface with other materials. Indicate membrane layout and seam locations.

C. Product Data: Submit product data for all roof system components and accessories.

D. Manufacturer's installation instructions including special precautions required for seaming membrane.

E. Manufacturer's Certificates
   1. Submit written certification that products meet or exceed specified requirements.
   2. Submit written certification that the roof system manufacturer has reviewed the Drawings and Specification for this project and that the specified roof system warranty shall be issued upon successful completion of the roof system installation by an authorized applicator in accordance with the drawing, specifications, Manufacturer's approved shop drawings and published installation instructions.
   3. Submit with bid written certification that the contractor is an authorized applicator of the specified roof system.

F. Sample Warranties:
   1. Submit a sample copy of the specified Manufacturer's roof system warranty.
   2. Submit a sample copy of the specified Installer's guarantee.

G. Product Test Reports: Based on the evaluation of comprehensive ASTM testing procedures conducted by an independent testing agency of the specified roofing Products.

H. Manufacturer's Field Reports: Indicate procedures followed, ambient temperatures, humidity, wind velocity during application.

1.7 QUALITY ASSURANCE

A. Perform Work in accordance with NRCA Roofing and Waterproofing Manual.

B. Provide periodic inspections and approval performed by roofing manufacturer's technical representative during the installation of roofing materials at intervals not exceeding each 30 percent of the total roof system installation. Written inspection report must be submitted to Architect/Engineer within 72 hours of inspection.

1.8 QUALIFICATIONS

A. Manufacturer: Company specializing in manufacturing the specified roof system with minimum five years documented experience.

B. Applicator: Company specializing in performing Work of this section with minimum five years documented experience, and approved by manufacturer.
   1. Be certified by the State of Illinois in accordance with the Illinois Roofing Industry Licensing Act, Senate Bill IL64, as amended.

1.9 PRE-INSTALLATION REQUIREMENTS

A. Section 01 30 00 - Administrative Requirements: Preinstallation meetings.

B. Convene minimum one week prior to commencing Work of this section.

C. Review preparation and installation procedures and coordinating and scheduling required with related Work.

D. Roofing contractor's job site foreman is required to attend a full day on-site training session conducted by an authorized technical representative of the roof system manufacturer. Manufacturer's representative shall review preparation, installation, and detailing procedures required to obtain the specified roof system warranty.

E. Mandatory startup technical service provided by manufacturer's representative must be completed prior to installation of new roof system.

1.10 DELIVERY, STORAGE, AND HANDLING

A. Section 01 60 00 - Product Requirements: Requirements for transporting, handling, storing, and protecting products.

B. Deliver products in manufacturer's original containers, dry, undamaged, with seals and labels intact.

C. Store products in weather protected environment, clear of ground and moisture.

D. Protect foam insulation from direct exposure to sunlight.

E. Store adhesives and solvent-based liquids away from excessive heat, sparks, and open flame.

F. Store adhesives and sealants at temperature above 40º F.

G. Store Products on roof in a manner to prevent deformation of deck and overloading the structure. Properly secure to prevent movement due to wind or other forces.

1.11 ENVIRONMENTAL REQUIREMENTS

A. Section 01 60 00 - Product Requirements: Environmental conditions affecting products on site.

B. Do not apply roofing membrane during inclement weather. Comply with manufacturer's recommendations for minimum and maximum temperatures and humidity during application.

C. Do not apply roofing membrane to damp or frozen deck surface or when precipitation is expected or occurring.

D. Do not expose materials vulnerable to water or sun damage in quantities greater than can be weatherproofed during same day.

1.12 COORDINATION

A. Section 01 30 00 - Administrative Requirements: Coordination and project conditions.

B. Coordinate Work with installation of associated roof penetrations and metal flashings, as Work of this section proceeds.

C. Schedule and execute work to prevent leaks and excessive traffic on completed roof sections. Care should be exercised to provide protection for the interior of the building and to ensure water does not flow beneath any completed sections of the membrane system.

D. Do not disrupt activities in occupied spaces.

E. Before beginning work, the roofing contractor must secure approval from the building owner's representative for the following:
   1. Areas permitted for personnel parking.
   2. Access to the site.
   3. Areas permitted for storage of materials and debris.
   4. Areas permitted for the location of cranes, hoists and chutes for loading and unloading materials to and from the roof.

F. Interior stairs or elevators may not be used for removing debris or delivering materials, except as authorized by the building owner's representative.

1.13 SAFETY

A. The contractor shall be solely responsible for all means and methods as they relate to safety and shall comply with all applicable local, state and federal requirements. All related personnel shall be instructed daily of the full time requirement to maintain a safe environment for the contractors personnel and facility's occupants.

1.14 WARRANTY

A. Section 01 70 00 - Execution and Closeout Requirements: Requirements for warranties.

B. Installer’s Guarantee: Submit roofing Installer's written warranty, signed by Installer/Applicator, covering all work of this section to be free of defect or otherwise not in accordance with the contract documents, including all components of roofing system, for the following warranty period:
   1. Warranty Period: Two (2) years from date of Substantial Completion.

PART 2 PRODUCTS

2.1 TRI-POLYMER ALLOY ROOFING (TPA) - FULLY ADHERED

A. Manufacturers:
   1. Tremco; TPA FB 60 mil.
   2. Versico; Versifleece KEE HP 60 mil (115).
   3. Johns Manville; PVC-60 FB.
   4. Carlisle; Sure-Flex KEE HP 60 mil (115).
   5. Substitutions: Section 01 60 00 – Product Requirements.

2.2 COMPONENTS

A. All components of the roof system shall be manufactured, supplied, or accepted in writing by the roof system manufacturer.

B. Membrane: ASTM D6754 or D4434 Type III; White single-ply fleece-backed thermoplastic membrane comprised of PVC that contains KEE (Elvaloy), with internal fabric reinforcement and a wick resistant non-woven polyester fleece backing; conforming to the following minimum physical properties:

Properties	Test	Results
Thickness over Fleece	ASTM D4637	.059 inch
Thickness over Scrim	ASTM D4434	.02 inch
Breaking Strength	ASTM D751, MD	320 pounds
Seam Strength	ASTM D638	90 percent
Low Temperature Bend	ASTM D2135	PASS (-40°)

C. Flexible Flashings: Same material, color and thickness as roof membrane for all curbs, walls, and penetrations. Provide prefabricated pipe boots, inside corners and outside corners as recommended by the roof system manufacturer.

D. Seaming Materials: All membrane laps shall be heat welded. Provide all materials and equipment as recommended by membrane manufacturer. All field seams exceeding 10 feet in length shall be welded with an approved automatic welder.

E. Adhesive Materials:
1. Field Membrane, Flashing, Cover Board, and Insulation Adhesive: Low-rise, two component urethane foam adhesive as recommended and approved by the roof system manufacturer.
2. Primer, Thinner and Cleaner: As recommended by adhesive manufacturer, compatible with sheet membrane.

F. Insulation: ASTM C1289, Type II, Class I, Grade 2, faced rigid cellular polyisocyanurate roof insulation, with the following characteristics:
1. Board Density: 2.0 pounds per cubic foot nominal.
2. Compressive Strength: 20 pounds per square inch minimum (Grade 2).
3. Board Thickness:
   a. Flat Structure: Tapered panels 1/4 inch per foot (1-1/2 inch starting thickness) adhered over a 2 inch thick flat mechanically attached base layer (total starting thickness of 3-1/2 inches).
   b. Tapered crickets: Tapered 1/2 inch per foot with 1/2 inch starting thickness.

G. Cover Board: ASTM C 1278/C 1278M, cellulosic-fiber-reinforced, water-resistant gypsum substrate, 1/2 inch thick.
1. Manufacturers/Products:
   a. United States Gypsum Co; Securock Gypsum-Fiber Roof Board.
   b. Substitutions: Section 01 60 00 – Product Requirements.

2.3 ACCESSORIES

A. Membrane Coated Metal Accessories:
   1. Fabricated from coated laminate metal by the roof system manufacturer: .020 inch thick membrane laminated to 24 gauge G-90 galvanized steel with acrylic backwash coating.

B. Mechanical Fasteners: Screw-type fasteners and plates, appropriate for purpose intended and approved by Factory Mutual and roof system manufacturer; length required for thickness of material with metal washers.

C. Sealants and water cut-off mastic: As recommended by membrane manufacturer.

D. Surface Mounted Termination: Extruded aluminum termination bar and related fasteners by roof system manufacturer.

E. Joint Filler: Extruded closed-cell polyethylene foam or polyethylene jacketed polyurethane foam, non-bleeding, non-staining, oversized 30 to 50 percent.

F. Miscellaneous Accessories: Provide preformed cone and vent sheet flashings, preformed inside and outside corner sheet flashings, T-joint covers, lap sealants, termination reglets, and other accessories as recommended and approved by the roof system manufacturer.

G. Roof Traffic Pads / Walk Pads: Prefabricated walk pad rolls by roof system manufacturer with textured surface. Walk pads shall be adhered to roof surface using bonding adhesive or heat welded as recommended by the roof system manufacturer.

PART 3 EXECUTION

3.1 EXAMINATION

A. Section 01 30 00 - Administrative Requirements: Coordination and project conditions.

B. Verify surfaces and site conditions are ready to receive Work.

C. Verify substrate is supported and secure. Verify substrate surfaces are dry and free of moisture.

D. Verify substrate is clean and smooth, free of depressions, waves, or projections, properly sloped to drains, valleys, or eaves, and suitable for installation of roof system.

E. Verify roof openings, curbs, pipes, sleeves, ducts, and vents through roof are solidly set, and reglets are in place.

3.2 PREPARATION

A. Remove all loose debris from the substrate surface.

B. Follow the roof system manufacturer’s published instructions for the preparation of an approved substrate.

3.3 INSTALLATION

A. Insulation Application:

1. Lay boards with edges in moderate contact without forcing. Cut to fit neatly to perimeter blocking and around penetrations through roof with no joints or gaps greater than 1/4 inch. Stagger joints horizontally and vertically where multiple layers are provided.
    a. Install 2 inch thick base layer of insulation and secure to deck using mechanical fasteners specifically designed and sized for fastening specified board-type roof insulation to deck type.
        1) Fasten insulation according to requirements in FM Global's "RoofNav" for specified Windstorm Resistance Classification.
        2) Fasten insulation to resist uplift pressure at corners, perimeter, and field of roof.
    b. Secure all subsequent layers of insulation with the specified adhesive in accordance with the manufacturer's published specifications.
    c. Install cover boards over insulation with long joints in continuous straight lines with end joints staggered between rows. Offset joints of insulation below a minimum of 6 inches in each direction. Loosely butt cover boards together.
        1) Set cover board in ribbons of bead-applied insulation adhesive, firmly pressing and maintaining insulation in place.

2. Apply no more than can be covered in the same day.

B. Membrane Application:

1. Membrane placement shall comply with the manufacturer’s published installation instructions.
    a. Begin installation of roofing membrane in the presence of roof system manufacturer’s technical personnel.
    b. Attach membrane with full coverage of low-rise foam adhesive to properly installed and prepared substrate in accordance with the roof manufacturer’s published installation instructions. The surface shall be clean, dry, smooth, and free from contamination.
    c. The membrane shall be cut to fit neatly around all penetrations and roof projections.
    d. The membrane shall be unrolled and positioned with a minimum overlap as specified by the manufacturer. Laps shall be shingled with, or run parallel to, the slope of the roof.
    e. Membrane Seaming: Clean seam areas, overlap membrane, and hot-air weld all membrane seams with approved welding equipment in accordance with the manufacturer’s published instructions to ensure a watertight seam installation.
        1) Probe test all membrane seams to verify weld continuity.
        2) All membrane splice intersections shall be overlaid with T Joint Covers as recommended by the manufacturer.

C. Flashings And Accessories:
   1. Provide all flashings and accessories as required to provide a complete and warranted roof system.
   2. Apply flexible flashings to seal membrane to vertical elements.
   3. Vertical flashings shall be fully-adhered to a dry, smooth solvent-resistant and compatible substrate using approved bonding adhesive.
   4. The top of installed flashings shall be fastened under metal counterflashing, metal roof edge, or metal reglet. The maximum distance between fasteners shall be 12-inches unless otherwise noted or required by roof system manufacturer.
   5. Flashings shall not be applied over thru-wall flashings or weep holes. All vertical flashings shall extend a minimum of 8-inches above roof level unless previously accepted by the Architect/Engineer and the roof manufacturer's technical department.
   6. Coordinate installation of all roof drainage components, roof edges and related flashings.
   7. Seal flashings and flanges of items penetrating membrane.
   8. Install walkway pads in accordance with the manufacturer's published instructions. Space pad joints to permit drainage.

D. Execute work by methods to avoid damage to other work, and which will provide appropriate surfaces to receive patching and finishing.

E. Fit work water-tight to all pipes, sleeves, ducts, conduit, and other penetrations through roof surfaces.

3.4 FIELD QUALITY CONTROL

A. Section 01 40 00 - Quality Requirements.

B. Require site attendance of roofing materials' manufacturers during installation of the Work.

3.5 CLEANING

A. Section 01 70 00 - Execution and Closeout Requirements: Final cleaning.

B. In areas where finished surfaces are soiled by Work of this section, consult manufacturer of surfaces for cleaning advice and conform to their documented instructions.

C. Repair or replace defaced or disfigured finishes caused by Work of this section prior to substantial completion.

3.6 PROTECTION OF INSTALLED CONSTRUCTION

A. Section 01 70 00 - Execution and Closeout Requirements: Protecting installed construction.

B. The contractor must take all precautions necessary to protect the finished roof surface and adjacent building surfaces from being soiled by work of this section.

C. Where traffic must continue over finished roof membrane, protect surfaces.

END OF SECTION

SECTION 07 62 00 - SHEET METAL FLASHING AND TRIM

PART 1 GENERAL

1.1 SUMMARY

A. Section includes gutters and downspouts, and fabricated sheet metal items.

B. Related Sections:
1. Section 07 54 16 - KEE PVC Roofing - Fully Adhered Membrane Roofing.
2. Section 07 71 00 – Roof Specialties.
3. Section 07 90 00 - Joint Protection.

1.2 REFERENCES

A. American Architectural Manufacturers Association:
1. AAMA 2604 - Voluntary specification, Performance Requirements and Test Procedures for High Performance Organic Coatings on Aluminum Extrusions and Panels.
2. AAMA 2605 - Voluntary Specification, Performance Requirements and Test Procedures for Superior Performing Organic Coatings on Aluminum Extrusions and Panels.

B. ASTM International:
1. ASTM A653/A653M - Standard Specification for Steel Sheet, Zinc-Coated (Galvanized) or Zinc-Iron Alloy-Coated (Galvannealed) by the Hot-Dip Process.
2. ASTM A924/A924M - Standard Specification for General Requirements for Steel Sheet, Metallic-Coated by the Hot-Dip Process.
3. ASTM B32 - Standard Specification for Solder Metal.
4. ASTM B209 - Standard Specification for Aluminum and Aluminum-Alloy Sheet and Plate.
5. ASTM D226 - Standard Specification for Asphalt-Saturated Organic Felt Used in Roofing and Waterproofing.
6. ASTM D4397 - Standard Specification for Polyethylene Sheeting for Construction, Industrial, and Agricultural Applications.
7. ASTM D4586 - Standard Specification for Asphalt Roof Cement, Asbestos-Free.

C. Federal Specification Unit:
1. FS TT-C-494 - Coating Compound, Bituminous, Solvent Type, Acid Resistant.

D. Sheet Metal and Air Conditioning Contractors:
1. SMACNA - Architectural Sheet Metal Manual.

1.3 DESIGN REQUIREMENTS

A. Gutter and Downspout Components: Conform to SMACNA Manual for sizing components for rainfall intensity determined by storm occurrence of 1 in 10 years.

1.4 SUBMITTALS

A. Section 01 33 00 - Submittal Procedures: Submittal procedures.

B. Shop Drawings: Indicate material profile, jointing pattern, jointing details, fastening methods, flashings, terminations, and installation details.

C. Product Data: Submit data on manufactured components metal types, finishes, and characteristics.

1.5 QUALIFICATIONS

A. Fabricator and Installer: Company specializing in sheet metal work with minimum five years experience.

1.6 PRE-INSTALLATION MEETINGS

A. Section 01 30 00 - Administrative Requirements: Pre-installation meeting.

B. Convene minimum one week prior to commencing work of this section.

1.7 DELIVERY, STORAGE, AND HANDLING

A. Section 01 60 00 - Product Requirements: Product storage and handling requirements.

B. Stack material to prevent twisting, bending, and abrasion, and to provide ventilation. Slope metal sheets to ensure drainage.

C. Prevent contact with materials causing discoloration or staining.

1.8 COORDINATION

A. Section 01 30 00 - Administrative Requirements: Coordination and project conditions.

PART 2 PRODUCTS

2.1 SHEET METAL FLASHING, TRIM, GUTTERS AND DOWNSPOUTS

A. Materials:
1. Galvalume:
a. Aluminized Steel: Type 2, base metal is steel tested in accordance with ASTM-A-446 to meet or exceed a minimum yield point of 48,000 pounds per square inch. Coated by the continuous hot-dip method uniformly on both sides with commercially pure aluminum. The coating shall be saturated with iron but contains no silicon. Minimum weight of coating, by triple-spot test is 0.60 ounce determined in accordance with Military Specification MIL-S-4174-A.
b. Downspouts, shall be 24 gauge. Gutters shall be shall be 22 gauge. Non-embossed steel with cold-formed configuration.

c. Finish: Factory applied 2 coat oven cured Fluropon coating with minimum 70 percent solids content for Kynar resin over a primer in accordance with the manufacturer's written procedures. Color shall be as selected by the Architect/Engineer from the manufacturer's full color selection.

2.2 ACCESSORIES

A. Fasteners: Same material and finish as flashing metal, with soft neoprene washers.

2.3 FABRICATION

A. Form sections shape indicated on Drawings, accurate in size, square, and free from distortion or defects.

B. Fabricate cleats of same material as sheet metal, interlocking with sheet.

C. Form pieces in longest possible lengths. in single length sheets.

D. Hem exposed edges on underside 1/2 inch; miter and seam corners.

E. Gutters shall be installed by using aprons and hangers or combination hangers of the same material as the gutter. (NOTE: Spikes and ferrules or brackets attached to outside periphery of the gutter will not be allowed.)

PART 3 EXECUTION

3.1 EXAMINATION

A. Section 01 30 00 - Administrative Requirements: Coordination and project conditions.

B. Verify roofing termination and base flashings are in place, sealed, and secure.

C. Before starting work, verify governing dimensions at building; examine, clean and repair, if necessary, any adjoining work on which this work is in any way dependent for its proper installation.

3.2 INSTALLATION

A. Install clear sealant at all locations shown on details and where required.

B. Secure flashings in place using concealed fasteners. Fit flashings tight in place. Make corners square, surfaces true and straight in planes, and lines accurate to profiles.

C. Slope gutters to drain to downspouts a minimum of 1/16 inch per foot.

D. Terminate downspouts with 45 degree discharge elbow and provide new concrete splashblocks.

E. Seal all metal joints watertight.

3.3 FIELD QUALITY CONTROL

A. Section 01 70 00 – Execution and Closeout Requirements.

B. Inspection will involve surveillance of Work during installation to ascertain compliance with specified requirements.

3.4 SCHEDULE

A. Gutters:
1. Material: Galvalume.
2. Thickness: 22 gauge.
3. Finish: Kynar 500, factory applied 2 coat oven cured Fluropon coating with minimum 70 percent solids content for Kynar resin over a primer in accordance with the manufacturer's written procedures. Color shall be as selected by the Architect/Engineer from the manufacturer's full color selection.

B. Downspouts:
1. Material: Galvalume.
2. Thickness: 24 gauge.
3. Finish: Kynar 500, factory applied 2 coat oven cured Fluropon coating with minimum 70 percent solids content for Kynar resin over a primer in accordance with the manufacturer's written procedures. Color shall be as selected by the Architect/Engineer from the manufacturer's full color selection.

END OF SECTION

SECTION 07 71 00 - ROOF SPECIALTIES

PART 1 GENERAL

1.1 SUMMARY

A. Section includes factory fabricated and pre-finished metal roof edge system, roof-to-roof expansion joint, pipe portal penetration and related accessories.

1.2 REFERENCES

A. National Roofing Contractors Association:
   1. NRCA - The NRCA Roofing and Waterproofing Manual.

B. Sheet Metal and Air Conditioning Contractors:
   1. SMACNA - Architectural Sheet Metal Manual.

C. Single Ply Roofing Institute:
   1. SPRI ES-1 - Wind Design Standard for Edge Systems Used with Low Slope Roofing Systems.

1.3 SUBMITTALS

A. Section 01 33 00 - Submittal Procedures: Submittal procedures.

B. Shop Drawings: Indicate configuration and dimension of components, adjacent construction, required clearances and tolerances, and other affected work.

C. Product Data: Submit data on shape of components, materials and finishes, anchor types and locations.

D. Manufacturer's Installation Instructions: Submit instructions for special procedures and perimeter conditions requiring special attention.

1.4 QUALITY ASSURANCE

A. Perform Work in accordance with SMACNA and NRCA details.

B. High performance roof edge shall be CERTIFIED by the manufacturer to comply with ANSI/SPRI Standard ES-1. Roof edge shall meet performance design criteria according to the following test standards:
   1. ANSI/SPRI ES-1 Test Method RE-1 Test for Roof Edge Termination of Single-ply Roofing Membranes: The fascia system shall be tested to secure the membrane to minimum 100 pounds per foot in accord with the ANSI/SPRI ES-1 Test Method RE-1. Use the current edition of ANSI/SPRI ES-1 Wind Design Standard for Edge Systems Used with Low Slope Roofing Systems.
   2. ANSI/SPRI ES-1 Test Method RE-2 Pull-Off Test for Fascia: The fascia system shall be tested in accord with the ANSI/SPRI ES-1 Test Method RE-2. Use the current edition of

ANSI/SPRI ES-1 Wind Design Standard for Edge Systems Used with Low Slope Roofing Systems.

3. The roof edge product shall be UL Classified by Underwriters Laboratories, Inc.® or other 3rd party verification of compliance with the ANSI/SPRI ES-1 Wind Design Standard.

1.5 WARRANTY

A. Section 01 70 00 - Execution and Closeout Requirements: Product warranties and product bonds.

B. Manufacturer's Standard Warranty: Warranted materials shall be free of defects in material and workmanship for five years after shipment.

C. Special 25-Year Warranty: Manufacturer shall guarantee that a standard size roof edge system, when installed per manufacturer's instructions, will not blow off, leak, or cause membrane failure, in wind conditions up to 155 miles per hour.

PART 2 PRODUCTS

2.1 MANUFACTURED ROOF SPECIALTIES

A. Manufacturers: When offered by the roof system manufacturer, specified components shall be privately labeled and included in the roof manufacturer's roof system warranty.
   1. Metal-Era.
   2. W.P. Hickman Company.
   3. Substitutions: Section 01 60 00 - Product Requirements.

2.2 COMPONENTS

A. Roof Edge System: A two-part assembly with rigid extruded aluminum termination base plate, and decorative snap-on fascia cover for single-ply roofs. The system shall have all concealed fasteners with no penetration on horizontal roof surface.
   1. Exterior Fascia Covers: 24 gauge galvanized steel in 12 foot lengths for all sizes; concealed, matching 4 inch wide joint splice plates.
      a. Standard color Kynar-500 as selected by the Architect from manufacturer's color chart.
   2. Extruded bar: Shall be continuous 6063-T6 alloy aluminum at 12 feet standard lengths with pre-punched slotted holes. All bar miters factory welded.
      a. Injection Molded EPDM Bar Splice to allow thermal movement expansion of extruded aluminum anchor bar.

B. Roof to Roof Expansion Joint:
   1. Cap Flashing: 24 gauge galvanized steel in 12 foot lengths for all sizes; concealed, matching 12 inch wide joint splice plates.
      a. Standard color Kynar-500 as selected by the Architect from manufacturer's color chart.
      b. Provide with articulatory galvanized cleats and rails that allow four-way movement for expansion and contraction.

2.3 ACCESSORIES

A. Miters, end caps, and other accessories shall be fabricated by the roof edging manufacturer to suit the conditions indicated on the Drawings.

B. Provide fasteners consistent with manufacturer's instructions for each product that is suitable for the substrate to which it is being installed.

C. Pipe Portal Penetration: Condensing Unit line set and conduit penetrations.
   1. Basis of design: Portals Plus Extra Tall Alumi-Flash as manufactured by Portals Plus, Inc., Bensenville, IL
      a. 13 inch tall .060 spun aluminum base unit with 8 inch collared opening.
      b. EPDM compression molded cap designed for up to four penetrations with stainless steel worm gear clamps.

PART 3 EXECUTION

3.1 EXAMINATION

A. Section 01 30 00 - Administrative Requirements: Coordination and project conditions.

B. Verify deck, curbs, roof membrane, base flashing, and other items affecting Work of this section are in place and positioned correctly.

C. Verify that sheet metal installation will not disrupt other trades. Verify that the substrate is dry, clean and free of foreign matter. Report and correct defects prior to installation.

3.2 INSTALLATION

A. Coordinate installation of components of this section with installation of roofing membrane and base flashings.

B. Coordinate installation of sealants and roofing cement with Work of this section to ensure water tightness.

C. Coordinate installation of flashing flanges into reglets where applicable.

3.3 PROTECTION

A. Protect installed products until completion of project.

B. Touch-up, repair or replace damaged products before Substantial Completion.

END OF SECTION

SECTION 07 90 00 - JOINT PROTECTION

PART 1 - GENERAL

1.1 SUMMARY

A. Section Includes:
   1. Preparing sealant substrate surfaces.
   2. Sealant and backing.

B. Related Requirements:
   1. Section 03 30 00 - Cast-In-Place Concrete: Sealants used in conjunction with concrete.
   2. Section 04 20 00 – Concrete Unit Masonry: Sealants used in conjunction with concrete masonry.
   3. Section 07 62 00 - Sheet Metal Flashing and Trim: Sealants used in conjunction with metal flashings.
   4. Section 08 80 00 - Glazing: Sealants used in conjunction with glazing methods.

1.2 REFERENCES

A. American Society for Testing and Materials (ASTM):
   1. ASTM C717 - Standard Terminology of Building Seals and Sealants.
   2. ASTM C834 - Specification for Latex Sealants.
   3. ASTM C920 - Specification for Elastomeric Joint Sealants.
   4. ASTM D1056 - Flexible Cellular Material- Sponge or Expanded Rubber.

B. Federal Specifications (FS):
   1. FS SS-S-200 - Sealing Compounds, Two Component, Elastomeric, Polymer Type, Jet-Fuel Resistant, Cold Applied.
   2. FS TT-S-1657 - Sealing Compound, Single Component Butyl Rubber Based Solvent Release Type (for Buildings and other Types of Construction).
   3. COORDINATION

1.3 COORDINATION

A. Section 01 30 00 - Administrative Requirements: Requirements for coordination.

B. Coordinate Work of this Section with Sections referencing this Section.

1.4 SUBMITTALS

A. Section 01 33 00 – Submittal Procedures: Procedures for submittals.
   1. Product Data: Product chemical characteristics, performance criteria, substrate preparation, limitations, and color availability.

1.5 QUALITY ASSURANCE

A. Installer Qualifications: Company specializing in performing Work of this Section with minimum 5 years documented experience.

1.6 DELIVERY, STORAGE AND HANDLING

A. Section 01 60 00 - Product Requirements: Transport, handle, store, and protect products.

B. Deliver Products in manufacturer's original unopened containers or packages with labels intact, identifying product and manufacturer, date of manufacture, lot number, shelf life, curing time, and mixing instructions, where applicable.

C. Store and handle materials to prevent deterioration or damage due to moisture, temperature changes, contaminants, or other causes.

D. Protection:
   1. Protect materials from moisture and dust by storing in clean, dry location remote from construction operations areas.
   2. Provide additional protection according to manufacturer instructions.

1.7 PROJECT CONDITIONS OR SITE CONDITIONS

A. Environmental Requirements: Install sealant during manufacturer's recommended temperature ranges and weather conditions for application and cure. Consult manufacturer when sealant cannot be applied during recommended conditions.

1.8 WARRANTY

A. Section 01 70 00 - Execution and Closeout Requirements: Requirements for warranties.

B. Warranty:
   1. Submit written warranty signed by sealant manufacturer agreeing to replace sealants and accessories which fail because of loss of cohesion or adhesion or which do not cure.
   2. Warranty Period: 5 years or longer per the manufacturers' standard warranties.

PART 2 - PRODUCTS

2.1 MANUFACTURERS

A. Subject to compliance with project requirements, manufacturers offering specified items which may be incorporated into the work include the following:
   1. Bostik, Inc, Huntingdon Valley, PA, (800) 523-2678, (125) 674-5600.
   2. Dow Corning, Midland, MI (517) 496-4000.
   3. GE Silicones, Waterford, NY (518) 233-3330.
   4. Mameco International, Cleveland, OH, (800) 321-6412, (216) 752-4400.
   5. W.R. Meadows, Inc, Elgin, IL (800) 342-5976, (847) 683-4500.
   6. Nomaco, Inc., Zebulon, NC, (919) 269-6500.
   7. Pecora Corporation, Harleysville, PA, (800) 523-6688, (215) 723-6051.
   8. Sika Corporation, Lyndhurst, NJ, (800) 933-7452, (201) 933-8800.
   9. Sonneborn Building Products Div. ChemRex, Inc., Shakopee, MN (800) 243-6739, (612) 496-6000.
   10. Tremco, Beachwood, OH, (800) 852-3821, (216) 292-5000.
   11. USG Corp., Chicago, IL (800) 874-4968, (312) 606-4000.

2.2 BUILDING SEALANTS (See Sealant Schedule at the end of this Section for specific use of sealants.)

A. Urethanes:
   1. Type 1: Two-Part Urethane: Self-Leveling, ASTM C920, Type M, Grade P, Class 25.
      a. Chem-Calk CC-550, by Bostik.
      b. Vulkem 245, by Mameco.
      c. Vulkem 255, Wide-Joint, by Mameco.
      d. NR-200 Urexpan, by Pecora Corporation.
   2. Type 2: Two-Part Urethane: Non-Sag, ASTM C920, Type M, Grade NS, Class 25.
      a. Chem-Calk 500, by Bostik.
      b. Vulkem 227, by Mameco.
      c. Sonolastic NP 2, by Sonneborn Building Products, ChemRex Inc.
   3. Type 3: One-Part Urethane: Self-Leveling, ASTM C920, Type S, Grade P, Class 25.
      a. Vulkem 45, by Mameco.
      b. Urexpan NR-201, by Pecora Corporation.
      c. Sonolastic SL1, by Sonneborn Building Products, ChemRex Inc.
      d. Sikaflex 1C-SL by Sika.
   4. Type 4: One-Part Urethane: Non-Sag, ASTM C920, Type S, Grade NS, Class 25.
      a. Chem-Calk 900, by Bostik.
      b. Vulkem 116, by Mameco.
      c. Sonolastic NP I, by Sonneborn Building Products, ChemRex Inc.

B. Silicones:
1. Type 1: One-Part Silicones: ASTM C920, Type S, Grade NS, Class 50.
   a. 795 Silicone Building Sealant, by Dow Corning.
   b. 864 Architectural Silicone Sealant, by Pecora Corporation.
2. Type 2: One-Part Silicones: ASTM C920, Type S, Grade NS, Class 25.
   a. 999-A Silicone Building & Glazing Sealant, Dow Corning.
   b. Construction 1200 Sealant, General Electric Company.
3. Type 3: One-Part Silicones: ASTM C920, Type S, Grade NS, Class 25. Vertical Surfaces Only.
   a. Construction 1200 Sealant, General Electric Company.
   b. 999-A, Dow Corning.
   c. 860 Glaziers and Contractors Silicone Sealant, by Pecora Corporation. (colors only)
4. Type 4: One-Part Silicones: ASTM C920, Type S, Grade NS, Class 25 or 50.
   a. 786 Mildew Resistant Silicone Sealant, Dow Corning.
   b. SCS 1700 Sanitary Sealant, General Electric.
   c. 898 Silicone Sanitary Sealant, Pecora Corporation.

C. Acrylics, Latex:
1. Type 1: One-Part Acrylic Latex, Non-Sag, ASTM-C-834-76.
   a. Chem-Calk 600, by Bostik.
   b. LC-130, by MACCO Adhesives, The Glidden Company.
   c. Easa-ply ALS, by W. R. Meadows, Inc.
   d. AC-20+Silicone Acrylic Latex, by Pecora Corporation.
   e. Sonolac, Sonneborn Building Products, ChemRex Inc.

D. Acoustical Sealants:
1. Type 1: AC-20 FTR Acoustical and Insulation Sealant, by Pecora Corporation.
2. Type 2: 60+ Unicrylic, by Pecora Corporation.
3. Type 3: Sheetrock Acoustical Sealant, by United States Gypsum.

E. Butyls:
1. Type 1: One-Part Butyl, Non-Sag, FS TT-S-1657.
   a. Chem-Calk 300, by Bostik.
   b. BC-158 Butyl Rubber, by Pecora Corporation. (ASTM C1085)

F. Preformed Compressible & Non-Compressible Fillers:
1. Type 1: Backer Rod - Closed cell polyethylene foam:
   a. HBR Backer Rod, by Nomaco.
   b. #92 Greenrod, by Nomaco.
   c. Sonofoam Closed-Cell Backer Rod, Sonneborn Building Products, ChemRex Inc.
2. Type 2: Backer Rod - Open cell polyurethane foam:
   a. Denver Foam, by Backer Rod Mfg Inc.
   b. Foam Pack II, by Nomaco.
3. Type 3: Neoprene compression seals:
   a. WE, WF, and WG Series, by Watson Bowman & Acme Corp.
   b. Will-Seal 150 Precompressed Expanding Foam Sealants, by Will-Seal, a Division of Illbruck.
4. Type 4: Butyl Rod: Kirkhill Rubber Co. (714)529-4901.

G. Bond Breaker Tape: Polyethylene tape of plastic as recommended by sealant manufacturer, to be applied to sealant-contact surfaces where bond to substrate of joint filler must be avoided for proper performance of sealant

2.3 COLORS

A. Generally use sealant colors matching color of material joint is located in.

B. Where a joint occurs between two materials of differing colors and Contractor cannot determine which material to match, contact Architect / Engineer for selection.

2.4 ACCESSORIES

A. Joint Cleaner: Provide type of non-corrosive and non-staining joint cleaning compound recommended by sealant manufacturer for joint surfaces to be cleaned.

B. Primer: Non-staining as recommended by sealant manufacturer.

C. Masking tape and similar accessories to protect surfaces from damage.

D. Joint Backing:
   1. Round foam rod, compatible with sealant.
   2. Size: Oversized 30 to 50 percent larger than joint width.

PART 3 - EXECUTION

3.1 EXAMINATION

A. Section 01 70 00 - Execution and Closeout Requirements: Requirements for application examination.

B. Verification of Conditions: Verify that field measurements, surfaces, substrates and conditions are as required, and ready to receive Work.
   1. Verify that joint widths are in conformance with sealant manufacturer allowable limits.
   2. Verify that contaminants capable of interfering with adhesion have been cleaned form joint and joint properly prepared.
   3. Verify that joint backing and release tapes are compatible with sealant.

C. Report in writing to Architect / Engineer prevailing conditions that will adversely affect satisfactory execution of the Work of this Section. Do not proceed with Work until unsatisfactory conditions have been corrected.

D. By beginning Work, Contractor accepts conditions and assumes responsibility for correcting unsuitable conditions encountered at no additional cost to the Owner.

3.2 PREPARATION

A. Section 01 70 00 – Execution and Closeout Requirements: Requirements for application preparation.

B. Comply with ASTM C1193.

C. Clean and prime joints.

D. Prepare and size joints in accordance with manufacturer's instructions. Clean substrates of dirt, laitance, dust, or mortar using solvent, abrasion, or sandblasting as recommended by manufacturer. Remove loose materials and foreign matter which might impair adhesion of sealant.

E. Verify that joint backing and release tapes are compatible with sealant. Verify sealant is suitable for substrate. Verify that sealant is paintable if painted finish is indicated.

F. Protect materials surrounding work of this Section from damage or disfiguration.

3.3 INSTALLATION

A. Comply with ASTM C1193.

B. Install sealant in accordance with manufacturer's published instructions.

C. Prime or seal joint surfaces where recommended by sealant manufacturer. Do not allow primer or sealer to spill or migrate onto adjoining surfaces.

D. Install backer rod and bond breaker tape where required by manufacturer.

E. Install preformed compressible and non-compressible fillers in accordance with manufacturer's published instructions.

F. Install sealants to depths recommended by sealant manufacturer in uniform, continuous ribbons free of air pockets, foreign embedded matter, ridges, and sags, "wetting" joint bond surfaces equally on both sides.

G. Tool joints concave unless shown otherwise. Where horizontal joints are between a horizontal surface and a vertical surface, fill joint to form slight cove so that joint will not trap moisture and foreign matter. Dry tool joints. Do not use soap, water, or solvent to tool joints.

3.4 CURING

A. Cure sealants in compliance with manufacturer's published instructions.

3.5 CLEANING

A. Section 01 70 00 – Execution and Closeout Requirements: Requirements for protecting finished Work.

B. Remove excess and spillage of sealants promptly as the work progresses, using materials and methods as recommended by sealant and substrate manufacturers. Clean adjoining surfaces to eliminate evidence of spillage without damage to adjoining surfaces or finishes.

3.6 SEALANT SCHEDULE

A. Exterior Joints:
   1. Perimeters of exterior openings where frames and other penetrations meet exterior facade of building: brick.
      a. Sealant Urethane Type 2
      b. Sealant Silicone Type 1 (for prefinished materials only)
   2. Expansion and control joints in exterior surfaces of unit masonry walls and polymer reinforced concrete, including at metal panels.
      a. Sealant Urethane Type 2
   3. Coping joints, coping-to-facade joints, cornice and wash, or horizontal surface joints not subject to foot or vehicular traffic.
      a. Sealant Urethane Type 2
      b. Sealant Urethane Type 4
      c. Sealant Silicone Type 1 (for prefinished materials only)
   4. Exterior joints in horizontal wearing and non-wearing surfaces.
      a. Sealant No. Urethane Type 1
      b. Sealant No. Urethane Type 3
      c. Preformed Compressible & Non-Compressible Filler Type 1
   5. Paving joints and curbs.
      a. Sealant Urethane Type 4
      b. Paving Sealant Type 2
   6. Setting bed for threshold and saddles.
      a. Sealant Acoustical Type 1
   7. Painted metal lap or flashing joints.
      a. Sealant Silicone Type 1

B. Interior Joints:
   1. Seal interior perimeters of exterior openings.
   2. Expansion and control joints on interior of exterior masonry walls.
   3. Perimeters of interior hollow metal and aluminum frames.
   4. Interior masonry vertical control joints and intersecting masonry walls; CMU-to-CMU, CMU-to-concrete.
   5. Joints at tops of non-load bearing masonry walls at underside of cast-in-place concrete.
      a. Sealant Urethane Type 2
      b. Sealant Urethane Type 4
   6. Perimeter of bath fixtures: sinks, tubs, urinals, waterclosets, basins, vanities, etc.
      a. Sealant Silicone Type 4
   7. Interior expansion and control joints in floor surfaces exposed to foot traffic.

a. Sealant Urethane Type 2
b. Sealant Urethane Type 4
c. Preformed Compressible & Non-Compressible Filler Type 1

8. Interior non-moving joints, including control, contraction, or construction joints, in interior floor slabs exposed to heavy duty traffic.
   a. Paving Sealant Type 1
9. Painted metal lap joints.
   a. Sealant Silicone Type 1

C. Glazing:
1. Structural Glazing.
   a. Sealant Silicone Type 2
   b. Sealant Silicone Type 3
2. General Purpose Glazing.
   a. Sealant Silicone Type 3
3. End Damming.
   a. Sealant Butyl Type 1

END OF SECTION

SECTION 08 41 13 - ALUMINUM-FRAMED ENTRANCES AND STOREFRONTS

PART 1 GENERAL

1.1 SUMMARY

A. Section includes aluminum-framed storefronts including aluminum and glass doors and frames including hardware and glass.

B. Related Sections:
1. Section 04 20 00 - Unit Masonry.
2. Section 07 90 00 - Joint Protection: System perimeter sealant and back-up materials.
3. Section 08 71 00 - Door Hardware: Hardware reinforcement requirements affecting framing members; hardware items other than specified in this section.
4. Section 08 80 00 - Glazing.

1.2 REFERENCES

A. Aluminum Association:
1. AA ADM 1 - Aluminum Design Manual.

B. American Architectural Manufacturers Association:
1. AAMA 501 - Methods of Test for Exterior Walls.
2. AAMA 502 - Voluntary Specification for Field Testing of Windows and Sliding Glass Doors.
3. AAMA 503 - Voluntary Specification for Field Testing of Metal Storefronts. Curtain Wall and Sloped Glazing Systems.
4. AAMA 611 - Voluntary Specification for Anodized Architectural Aluminum.
5. AAMA 1503 - Voluntary Test Method for Thermal Transmittance and Condensation Resistance of Windows, Doors and Glazed Wall Sections.
6. AAMA 2603 - Voluntary Specification, Performance Requirements and Test Procedures for Pigmented Organic Coatings on Aluminum Extrusions and Panels.
7. AAMA 2604 - Voluntary specification, Performance Requirements and Test Procedures for High Performance Organic Coatings on Aluminum Extrusions and Panels.
8. AAMA 2605 - Voluntary Specification, Performance Requirements and Test Procedures for Superior Performing Organic Coatings on Aluminum Extrusions and Panels.
9. AAMA CW-10 - Care and Handling of Architectural Aluminum from Shop to Site.
10. AAMA MCWM-1 - Metal Curtain Wall Manual.
11. AAMA SFM-1 - Aluminum Store Front and Entrance Manual.

C. American Society of Civil Engineers:
1. ASCE 7 - Minimum Design Loads for Buildings and Other Structures.

D. ASTM International:
1. ASTM A36/A36M - Standard Specification for Carbon Structural Steel.
2. ASTM A123/A123M - Standard Specification for Zinc (Hot-Dip Galvanized) Coatings on Iron and Steel Products.
3. ASTM A653/A653M - Standard Specification for Steel Sheet, Zinc-Coated (Galvanized) or Zinc-Iron Alloy-Coated (Galvannealed) by the Hot-Dip Process.
4. ASTM B209 - Standard Specification for Aluminum and Aluminum-Alloy Sheet and Plate.
5. ASTM B221 - Standard Specification for Aluminum and Aluminum-Alloy Extruded Bars, Rods, Wire, Profiles, and Tubes.
6. ASTM E84 - Standard Test Method for Surface Burning Characteristics of Building Materials.
7. ASTM E283 - Standard Test Method for Determining the Rate of Air Leakage Through Exterior Windows, Curtain Walls, and Doors Under Specified Pressure Differences Across the Specimen.
8. ASTM E330 - Standard Test Method for Structural Performance of Exterior Windows, Curtain Walls, and Doors By Uniform Static Air Pressure Difference.
9. ASTM E331 - Standard Test Method for Water Penetration of Exterior Windows, Curtain Walls, and Doors By Uniform Static Air Pressure Difference.
10. ASTM E547 - Standard Test Method for Water Penetration of Exterior Windows, Curtain Walls, and Doors by Cyclic Static Air Pressure Differential.
11. ASTM E1105 - Standard Test Method for Field Determination of Water Penetration of Installed Exterior Windows, Curtain Walls, and Doors by Uniform or Cyclic Static Air Pressure Difference.

E. National Fenestration Rating Council Incorporated:
1. NFRC 100 - Procedures for Determining Fenestration Product U-Factors.

F. National Fire Protection Association:
1. NFPA 255 - Standard Method of Test of Surface Burning Characteristics of Building Materials.

G. SSPC: The Society for Protective Coatings:
1. SSPC Paint 20 - Zinc-Rich Primers (Type I - Inorganic and Type II - Organic).
2. SSPC Paint 25 - Red Iron Oxide, Zinc Oxide, Raw Linseed Oil, and Alkyd Primer.

1.3 SYSTEM DESCRIPTION

A. Aluminum-framed storefront system includes tubular aluminum sections with supplementary internal support framing, aluminum and glass entrances, shop fabricated, factory finished, glass and glazing, related flashings, anchorage and attachment devices.

B. System Assembly: Site assembled.

1.4 PERFORMANCE REQUIREMENTS

A. System Design: Design and size components to withstand dead and live loads caused by positive and negative wind pressure acting normal to plane of wall, including building corners.
   1. As calculated in accordance with applicable code, as tested in accordance with ASTM E330.
   2. To design pressure of 20 pounds per square foot, as tested in accordance with ASTM E330.

B. Deflection: Limit mullion deflection to 1/175 for spans under 13’-6” and 1/240 plus 1/4 inch for spans over 13’-6”; with full recovery of glazing materials.

C. System Assembly: Accommodate without damage to components or deterioration of seals, movement within system, movement between system and peripheral construction, dynamic loading and release of loads, deflection of structural support framing.

D. Air Infiltration: Limit air leakage through assembly to 0.06 cfm/min/sq ft of wall area, measured at reference differential pressure across assembly of 1.57 pounds per square foot as measured in accordance with ASTM E283.

E. Air and Vapor Seal: Maintain continuous air barrier and vapor retarder throughout assembly, primarily in line with inside pane of glass and heel bead of glazing compound.

F. Water Leakage: None, when measured in accordance with ASTM E331 with test pressure difference of 20 percent of design pressure, with minimum differential of 2.86 pounds per square foot and maximum of 12.00 pounds per square foot.

G. Thermal Transmittance of Assembly (Excluding Entrances): Maximum U Value of 0.69 Btu/sq ft per hour per deg F when measured in accordance with AAMA 1503.

H. Expansion / Contraction: Provide for expansion and contraction within system components caused by cycling temperature range of 170 degrees F over 12 hour period without causing detrimental effect to system components and anchorage.

I. System Internal Drainage: Drain water entering joints, condensation occurring in glazing channels, or migrating moisture occurring within system, to exterior by weep drainage network.

1.5 SUBMITTALS

A. Section 01 33 00 - Submittal Procedures: Submittal procedures.

B. Shop Drawings: Indicate system dimensions, framed opening requirements and tolerances, affected related Work and expansion and contraction joint location and details.

C. Product Data: Submit component dimensions, describe components within assembly, anchorage and fasteners, glass and infill, door hardware, and internal drainage details.

D. Design Data: Indicate framing member structural and physical characteristics, calculations, and dimensional limitations.

E. Manufacturer's Certificate: Certify products meet or exceed specified requirements.

1.6 QUALITY ASSURANCE

A. Perform Work in accordance with AAMA SFM-1 and AAMA MCWM-1 - Metal Curtain Wall, Window, Store Front and Entrance - Guide Specifications Manual.

1.7 QUALIFICATIONS

A. Manufacturer and Installer: Company specializing in manufacturing aluminum glazing systems with minimum three years experience, and with service facilities within 100 miles of Project.

B. Design structural support framing components under direct supervision of Professional Engineer experienced in design of this Work and licensed in State of Illinois.

1.8 DELIVERY, STORAGE, AND PROTECTION

A. Section 01 60 00 - Product Requirements: Product storage and handling requirements.

B. Handle Products of this section in accordance with AAMA MCWM-1 - Curtain Wall Manual #10.

C. Protect finished aluminum surfaces with wrapping. Do not use adhesive papers or sprayed coatings which bond when exposed to sunlight or weather.

1.9 ENVIRONMENTAL REQUIREMENTS

A. Section 01 60 00 - Product Requirements.

B. Do not install sealants nor glazing materials when ambient temperature is less than 40 degrees F during and 48 hours after installation.

1.10 COORDINATION

A. Section 01 30 00 - Administrative Requirements: Coordination and project conditions.

1.11 WARRANTY

A. Section 01 70 00 - Execution and Closeout Requirements: Product warranties and product bonds.

B. Furnish five-year manufacturer warranty for glazed units.

PART 2 PRODUCTS

2.1 ALUMINUM-FRAMED STOREFRONTS

A. Manufacturers: Products:

1. EFCO Corp.
   Monett, MO
   (800)221-4169
   Doors: Series D518 Heavy Duty, Wide Stile Doors with System 403(T)

2. Kawneer Co., Inc.
   Doors: Heavy duty wide stile doors equal to others specified with Trifab VG451T Storefront System

3. YKK AP America, Inc.
   Dublin, GA
   (314) 304-5182
   Doors: Series 50D Wide Stile Doors with YES 45TU Thermal Storefront System

4. Oldcastle Building Envelope
   Terrell, TX
   (972) 551-6100
   Doors: Rugged WS 500 Series Wide Stile Doors with FG-3000 Thermal Storefront System

5. Tubelite, Inc.
   Walker, MI
   Doors: Wide Stile Doors with 14000 Series Storefront Framing

6. Substitutions: Not permitted.

B. Product Description:

1. Aluminum Frame: Thermally broken; flush glazing stops; drainage holes; internal weep drainage system. Frames for interior glazing need not to be thermally broken.
2. Mullions: Profile of extruded aluminum with internal reinforcement of aluminum or shaped steel structural section.
3. Doors: Aluminum framed glass doors; 1 3/4 inches thick, nominal 5 inch wide top rail and vertical stiles, nominal 10 inch wide bottom rail; square glazing stops.

2.2 COMPONENTS

A. Extruded Aluminum: ASTM B221; 6063 alloy, T5 temper typical, 6061 alloy, T6 temper for extruded structural members.

B. Sheet Aluminum: ASTM B209, 5005 alloy, H15 or H34 temper.

C. Sheet Steel: ASTM A653; galvanized to minimum G90.

D. Steel Sections: ASTM A36; shaped to suit mullion sections, galvanized to G90.

E. Glass: Specified in Section 08 80 00.

F. Glazing Materials: Storefront manufacturer's standard types to suit application and to achieve weather, moisture, and air infiltration requirements.

G. Hardware: Furnish manufacturer's standard door hardware for types of doors and applications indicated, and as specified below.
   1. Weatherstripping: Manufacturer's standard type to suit application, continuous and replaceable.
   2. Sill Sweep Strips: Resilient seal type, of neoprene compound.
   3. Threshold: Extruded aluminum, one piece for each door opening, ribbed as specified in Section 08 71 00.
   4. Hinges: Continuous, geared type as specified in Section 08 71 00.
   5. Panic Device: Surface mount rim type as specified in Section 08 71 00.
   6. Closer: Surface mount type as specified in Section 08 71 00.
   7. Finish: Exposed hardware to match hardware finishes specified in Section 08 71 00.
   8. Lock Cylinders: Specified in Section 08 71 00.

H. Flashings: Minimum 0.032-inch thick aluminum to match mullion sections where exposed.

I. Sealant and Backing Materials:
   1. Sealant Used Within System (Not Used for Glazing): Manufacturer's standard materials to achieve weather, moisture, and air infiltration requirements.
   2. Perimeter Sealant: Specified in Section 07 90 00.

J. Fasteners: Stainless steel.

2.3 FABRICATION

A. Fabricate components with minimum clearances and shim spacing around perimeter of assembly, yet enabling installation and dynamic movement of perimeter seal.

B. Accurately fit and secure joints and corners. Make joints flush, hairline, and weatherproof.

C. Prepare components to receive anchor devices. Fabricate anchors.

D. Arrange fasteners and attachments to conceal from view.

E. Prepare components with internal reinforcement for door hardware.

F. Reinforce framing members for imposed loads.

2.4 SHOP FINISHING

A. Clear Anodized Aluminum Surfaces: AAMA 611, AA-M12C22A41 non-specular as fabricated mechanical finish, medium matte chemical finish, and Architectural Class I 0.7 mils clear anodized coating.

B. Concealed Steel Items: Galvanized to ASTM A123; minimum 2.0 oz/sq ft coating thickness; Grade 85.

C. Apply bituminous paint to concealed aluminum and steel surfaces in contact with cementitious or dissimilar metals.

D. Touch-Up Primer for Galvanized Steel Surfaces: SSPC Paint 20 zinc rich.

E. Extent of Finish:
   1. Apply factory coating to surfaces exposed at completed assemblies.
   2. Apply finish to surfaces cut during fabrication so no natural aluminum is visible in completed assemblies, including joint edges.
   3. Apply touch-up materials recommended by coating manufacturer for field application to cut ends and minor damage to factory applied finish.

PART 3 EXECUTION

3.1 EXAMINATION

A. Section 01 30 00 - Administrative Requirements: Coordination and project conditions.

B. Verify dimensions, tolerances, and method of attachment with other Work.

C. Verify wall openings and adjoining air and vapor seal materials are ready to receive Work of this Section.

3.2 INSTALLATION

A. Install wall system in accordance with AAMA MCWM-1 - Metal Curtain Wall, Window, Store Front and Entrance - Guide Specifications Manual.

B. Attach to structure to permit sufficient adjustment to accommodate construction tolerances and other irregularities.

C. Provide alignment attachments and shims to permanently fasten system to building structure.

D. Align assembly plumb and level, free of warp or twist. Maintain assembly dimensional tolerances, aligning with adjacent Work.

E. Provide thermal isolation where components penetrate or disrupt building insulation.

F. Install sill flashings. Turn up ends and edges; seal to adjacent Work to form watertight dam.

G. Coordinate attachment and seal of perimeter air and vapor retarder materials.

H. Pack fibrous insulation in shim spaces at perimeter of assembly to maintain continuity of thermal barrier.

I. Install integral flashings and integral joint sealers.

J. Set thresholds in full bed of mastic and secure.

K. Install hardware using templates provided. Refer to Section 08 71 00 for installation requirements.

L. Coordinate installation of glass with Section 08 80 00; separate glass from metal surfaces.

M. Coordinate installation of perimeter sealants with Section 07 90 00.

3.3 ERECTION TOLERANCES

A. Section 01 40 00 - Quality Requirements: Tolerances.

B. Maximum Variation from Plumb: 0.06 inches every 3 feet non-cumulative or 1/16 inches per 10 feet, whichever is less.

C. Maximum Misalignment of Two Adjoining Members Abutting in Plane: 1/32 inch.

3.4 ADJUSTING

A. Section 01 70 00 - Execution and Closeout Requirements: Testing, adjusting and balancing.

B. Adjust operating hardware and sash for smooth operation.

3.5 CLEANING

A. Section 01 70 00 - Execution and Closeout Requirements: Final cleaning.

B. Remove protective material from pre-finished aluminum surfaces.

C. Wash down surfaces with solution of mild detergent in warm water, applied with soft, clean wiping cloths. Take care to remove dirt from corners. Wipe surfaces clean.

D. Remove excess sealant by method acceptable to sealant manufacturer.

3.6 PROTECTION OF INSTALLED CONSTRUCTION

A. Section 01 70 00 - Execution and Closeout Requirements: Protecting installed construction.

B. Protect finished Work from damage.

END OF SECTION

SECTION 08 71 00 - DOOR HARDWARE

PART 1 GENERAL

1.1 SUMMARY

A. Section includes hardware for steel and aluminum doors.
   1. Provide door gaskets, including weatherstripping and seals, and thresholds.

B. Related Sections:
   1. Section 08 12 14 - Standard Steel Frames: Silencers integral with steel frames.
   2. Section 08 13 14 - Standard Steel Doors.
   3. Section 08 14 16 - Flush Wood Doors.
   4. Section 08 41 13 - Aluminum-Framed Entrances and Storefronts.
   5. Division 26 - Electrical connections to electrified hardware.

1.2 REFERENCES

A. American National Standards Institute:
   1. ANSI A156.1 - Butts and Hinges.
   2. ANSI A156.2 - Bored and Preassembled Locks and Latches.
   3. ANSI A156.3 - Exit Devices.
   4. ANSI A156.4 - Door Controls - Closures.
   5. ANSI A156.5 - Auxiliary Locks and Associated Products.
   6. ANSI A156.6 - Architectural Door Trim.
   7. ANSI A156.7 - Template Hinge Dimensions.
   8. ANSI A156.12 - Interconnected Locks and Latches.
   9. ANSI A156.16 - Auxiliary Hardware.
   10. ANSI A156.18 - Materials and Finishes
   11. ANSI A156 - Complete Set of 24 BHMA Standards (A156 Series) with Binder.

B. Builders Hardware Manufacturers Association:
   1. BHMA Directory of Certified Products.

C. National Fire Protection Association:
   1. NFPA 80 - Standard for Fire Doors, Fire Windows.
   2. NFPA 252 - Standard Methods of Fire Tests of Door Assemblies.

D. Underwriters Laboratories Inc.:
   1. UL 10B - Fire Tests of Door Assemblies.
   2. UL 305 - Panic Hardware.
   3. UL - Building Materials Directory.

E. Intertek Testing Services (Warnock Hersey Listed):
   1. WH - Certification Listings.

1.3 SUBMITTALS

A. Section 01 33 00 - Submittal Procedures: Submittal procedures.

B. Shop Drawings:
   1. Indicate locations and mounting heights of each type of hardware, schedules, catalog cuts, electrical characteristics and connection requirements.
   2. Submit manufacturer's parts lists, and templates.

C. Manufacturer's Installation Instructions: Submit special procedures, and perimeter conditions requiring special attention.

D. Keys and Keying:
   1. All keying nomenclature shall be prepared using symbols, nomenclature and overall method as described in ASAHC NBHA Handbook – AIA File.
   2. Hardware supplier shall provide keying in accordance with instructions of Owner and Architect/Engineer, including three keys for each lock and six master keys.
   3. Before hardware is ordered, a complete keying schematic drawing shall be furnished to Architect/Engineer for approval.

1.4 CLOSEOUT SUBMITTALS

A. Section 01 70 00 - Execution and Closeout Requirements: Closeout procedures.

B. Project Record Documents: Record actual locations of installed cylinders and their master key code.

C. Operation and Maintenance Data: Submit data on operating hardware, lubrication requirements, and inspection procedures related to preventative maintenance.

D. Keys: Owner to provide keys, Owner to provide and contractor to install Schlage Primus cylinders.

1.5 QUALITY ASSURANCE

A. Perform Work in accordance with the following requirements:
   1. ANSI A156 series.
   2. NFPA 80.
   3. UL 305.

B. Furnish hardware marked and listed in BHMA Directory of Certified Products.

1.6 QUALIFICATIONS

A. Manufacturer: Company specializing in manufacturing products specified in this section with minimum ten years experience.

B. Hardware Supplier: Company specializing in supplying commercial and institutional door hardware with minimum ten years documented experience.

C. Hardware Supplier Personnel: Employ Architectural Hardware Consultant (AHC) to assist in work of this section.

D. Products Requiring Electrical Connection: Listed and classified by Underwriters' Laboratories, Inc., as suitable for purpose specified and indicated.

1.7 PRE-INSTALLATION MEETINGS

A. Section 01 30 00 - Administrative Requirements: Pre-installation meeting.

B. Convene minimum one week prior to commencing work of this section.

C. Include all persons involved with installation of doors, frames, and hardware.

1.8 DELIVERY, STORAGE, AND HANDLING

A. Section 01 60 00 - Product Requirements: Product storage and handling requirements.

B. Package hardware items individually with necessary fasteners, instructions, and installation templates, when necessary; label and identify each package with door opening code to match hardware schedule.

1.9 COORDINATION

A. Section 01 30 00 - Administrative Requirements: Coordination and project conditions.

B. Coordinate Work with other directly affected sections involving manufacture or fabrication of internal reinforcement for door hardware and recessed items.
   1. Provide templates or actual hardware as required to ensure proper preparation of doors and frames.

C. Sequence installation to accommodate required utility connections.

D. Coordinate Owner's keying requirements during course of Work.

1.10 WARRANTY

A. Section 01 70 00 - Execution and Closeout Requirements: Product warranties and product bonds.

B. Furnish five year manufacturer warranty for locksets and door closers.

1.11 MAINTENANCE MATERIALS

A. Section 01 70 00 - Execution and Closeout Requirements: Maintenance materials.

B. Furnish special wrenches, tools, and accessories applicable for each different and for each special hardware component supplied by hardware component manufacturer.

PART 2 PRODUCTS

2.1 DOOR HARDWARE

A. Manufacturers: Catalog numbers of manufacturers listed have been used to establish quality required. Only manufacturers listed in Paragraph B below are approved. Other manufacturers seeking approval shall do so in writing per General Requirements and shall list exact catalog numbers and description of items he proposes to furnish; include reference to this specification section for equal product reference; include cut sheets.

B. Designations: Following abbreviations identify listed manufacturers.
1. BAL Baldwin Hardware Mfg. Corp., Reading, PA.
2. BES Best Access Systems, Indianapolis, IN.
3. COR Corbin-Russwin Architectural Hardware, Berlin, CT.
4. GJ Glynn-Johnson, Div. of Dayton-Walter Corp, Chicago, IL.
5. HAG Hager Hinge Co., St. Louis, MO.
6. HES
7. HOR Horton Automatics, Corpus Christi, TX.
8. IVE Ives, Div. of Leigh Products, New Haven, CT.
9. LAW Lawrence Brothers, Inc., Sterling, IL.
10. LCN LCN Closer, Princeton, IL.
11. MCK McKinney Products Co., Scranton, PA.
12. NAT National Guard Products, Memphis, TN.
13. NOR Norton Door Controls, Charlotte, NC.
14. PEM Pemko, Ventura, CA.
15. RED Reed Exit Hardware, Charlotte, NC.
16. REE Reese Enterprises, Inc., Rosemount, MN.
17. RIX Rixson-Firemark, Franklin Park, IL.
18. ROC Rockwood Manufacturing Co., Rockwood, PA.
19. SAR Sargent, Div. of Kidde, New Haven, CT.
20. SCH Schlage Lock Co., Palatine, IL.
21. STA Stanley Hardware, New Britain, CT.
22. VON Von DuPrin, Indianapolis, IN.

2.2 COMPONENTS

A. General Hardware Requirements: Where not specifically indicated, comply with applicable ANSI A156 standard for type of hardware required. Furnish each type of hardware with accessories as required for applications indicated and for complete, finished, operational doors.
1. Templates: Furnish templates or physical hardware items to door and frame manufacturers sufficiently in advance to avoid delay in Work.
2. Reinforcing Units: Furnished by door and frame manufacturers; coordinated by hardware supplier or hardware manufacturer.
3. Fasteners: Furnish as recommended by hardware manufacturer and as required to secure hardware.
4. Finish: Match hardware item being fastened.
5. Electrical Devices: Make provisions and coordinate requirements for electrical devices and connections for hardware.

B. Hinges: Continuous hinge, manufactured of 6063-T6 aluminum.
   1. Components: Two interlocking geared leaves and a cover channel applied the full length of the door without mortising (concealed).
      a. Ensure separation of different metals to avoid galvanic corrosion.
      b. Provide 3 piece or electric power transfer continuous hinge as necessary at doors scheduled for wiring connections.

C. Locksets: Furnish locksets compatible with owner provided Schlage Primus cylinders. Typical 2-3/4 inch backset for interior doors and 3-3/4 inch backset for exterior doors. Furnish standard strikes with extended lips to protect trim from being marred by latch bolt.
   1. Bored (Cylindrical) Locksets: ANSI A156.2, Series 4000, Grade 1 unless otherwise indicated.
   2. Auxiliary Locksets: ANSI A156.5, Grade 1, mortise dead locks unless otherwise indicated.

D. Exit Devices: ANSI A156.3, Grade 1 surface mounted rim type and rim type, with push pad, unless otherwise indicated. Furnish standard strikes with extended lips to protect trim from being marred by latch bolt.
   1. Types: Suitable for doors requiring exit devices.
   2. Coordinators: Furnish overhead concealed in frame type at pairs of doors.
   3. All exit devices shall be UL listed for panic.
   4. Provide exit devices factory cut to door width. Locate exit devices at a height recommended by the exit device manufacturer, allowable by governing building codes, and approved by the Architect/Engineer.
   5. Provide removable mullions, as specified in the Hardware Groups.

E. Cylinders: Schlage Primus cylinders provided by Owner and installed by Contractor.
   1. Keying: Keyed by Owner.
   2. Include construction keying for contractor access prior to substantial completion.

F. Closers: ANSI A156.4 modern type with cover, surface mounted closers; full rack and pinion type with steel spring and non-freezing hydraulic fluid; closers required for fire rated doors unless otherwise indicated.
   1. Adjustability: Furnish controls for regulating closing, latching, speeds, and back checking.
   2. Arms: Type to suit individual condition; parallel-arm closers at reverse bevel doors and where doors swing full 180 degrees.
   3. Location: Mount closers on inside of exterior doors, room side of interior doors typical; mount on pull side of other doors.
   4. Operating Pressure: Maximum operating pressure as follows.
      a. Interior Doors: Maximum 5 pounds.
      b. Exterior Doors: Maximum 8.5 pound.

G. Thresholds, and Trim: Furnish as indicated in Schedule, with accessories as required for complete operational door installations.
   1. Weatherstripping: Furnish continuous weatherstripping at top and sides of exterior doors.
   2. Thresholds: Maximum 1/2 inch height.
   3. Wall Stops: ANSI A156.1, Grade 1, concave pad wall stop with no visible screws.

2.3 ACCESSORIES

A. Lock Trim: Furnish levers as indicated in Schedule.
   1. Do not permit through bolts on solid wood core doors.

B. Through Bolts: Do not permit through bolts and grommet nuts on door faces in occupied areas unless no alternative is possible.

2.4 FINISHING

A. Finishes: ANSI A156.18; furnish following finishes except where otherwise indicated in Schedule at end of section.
   1. Typical Exterior Exposed and High Use Interior Door Hardware:
      a. BHMA 630, satin finished stainless steel.
      b. BHMA 626, satin chromium plated brass or bronze.
   2. Typical Interior Door hardware:
      a. BHMA 626, satin chromium plated brass or bronze.
      b. BHMA 630, satin finished stainless steel.
   3. Closers: Finish appearance to match door hardware on same face of door.
      a. BHMA 628, satin aluminum, clear anodized.
   4. Thresholds: Finish appearance to match door hardware on exterior face of door.
      a. BHMA 628, satin aluminum, clear anodized.
      b. BHMA 630, satin finished stainless steel.
   5. Other Items: Furnish manufacturer's standard finishes to match similar hardware types on same door, and maintain acceptable finish considering anticipated use and BHMA category of finish.

2.5 PRODUCTS

A. Hinges:
   1. Hinges: Continuous, geared aluminum, heavy duty, concealed left 180 degree opening, clear anodized.
      a. Manufacturers:
         1) HAG – 780-112HD.
         2) MCK – 12 HD.
         3) PEM – CFM83 SLFHD.

B. Exit Devices: (Owner shall provide cylinders for exit devices contractor shall install).
   1. Fire rated, touch bar, surface mounted, rim type, lever handle, interchangeable core, US26D X US32D push bar; hex key dogging as allowed in the schedule.
      a. Manufacturer:
         1) VON – 99L-F.
         2) Substitutions: Not permitted.

C. Closers:
   1. Closer: Universal, non-handed, parallel arm with built-in cushioned stop.
      a. Manufacturer:
         1) LCN – 4041 Series with Spring Cush Arm.
         2) Substitutions: Not permitted.

D. Thresholds:
   1. Flat saddle, aluminum, 6 inches x ½ inch.
      a. Manufacturer:
         1) NAT – 426.
         2) PEM – 172A
         3) REE – S206A.
         4) Substitutions: Section 01 60 00: Product Requirements.
   2. Flat plate, aluminum ¼ inch thick by width indicated on Drawings by required length at door openings, with factory machined holes for recessed fasteners at 6 inches on center.
      a. NAT – 814.
      b. PEM – 14/1A.
      c. REE – BAP14.
      d. Substitutions: Section 01 60 00: Product Requirements.

E. Weatherstrip:
   1. Doorframe: Head and jamb, surface mount.
      a. Manufacturer:
         1) NAT – 130NA.
         2) PEM – 315CR
         3) REE – DS 78A.
         4) Substitutions: Section 01 60 00: Product Requirements.

   2. Door Bottom: Sill protection.
      a. Manufacturer:
         1) NAT – 200NA.
         2) PEM – 315CN
         3) REE – 323A.
         4) Substitutions: Section 01 60 00: Product Requirements.

   3. Door Top: Drip strip, frame mount.
      a. Manufacturer:
         1) NAT – 16AD.
         2) PEM – 346C
         3) REE – R201A.
         4) Substitutions: Section 01 60 00: Product Requirements.

F. Removable Mullions:
   1. Removable mullion, aluminum, with strikes and weatherstripping.
      a. Manufacturer:
         1) VON – 5654.
         2) Substitutions: Section 01 60 00: Product Requirements.
   2. Removable mullion, steel, with strikes and weatherstripping.
      a. Manufacturer:
         1) VON – KR 9954.
         2) Substitutions: Section 01 60 00: Product Requirements.

PART 3 EXECUTION

3.1 EXAMINATION

A. Section 01 30 00 - Administrative Requirements: Coordination and project conditions.

B. Verify doors and frames are ready to receive door hardware and dimensions are as indicated on shop drawings.

C. Verify electric power is available to power operated devices and is of correct characteristics.

3.2 INSTALLATION

A. Coordinate mounting heights with door and frame manufacturers. Use templates provided by hardware item manufacturer.

B. Mounting Heights From Finished Floor to Center Line of Hardware Item: Comply with manufacturer recommendations and applicable codes where not otherwise indicated.
   1. Locksets: 38 inch.
   2. Dead Bolt: 48 inch.
   3. Push Pad Type Exit Devices: 42 inch.

3.3 FIELD QUALITY CONTROL

A. Section 01 70 00 - Execution Requirements: Testing, adjusting, and balancing.

B. Architectural Hardware Consultant inspect installation and certify hardware and installation has been furnished and installed in accordance with manufacturer's instructions and as specified.

3.4 ADJUSTING

A. Section 01 70 00 - Execution Requirements: Testing, adjusting, and balancing.

B. Adjust hardware for smooth operation.

3.5 PROTECTION OF INSTALLED CONSTRUCTION

A. Section 01 70 00 - Execution Requirements: Protecting installed construction.

B. Do not permit adjacent work to damage hardware or hardware finish.

3.6 SCHEDULES

A. The following hardware sets are intended to establish type and standard of quality when used together with these section requirements. Examine Drawings and Specifications **and furnish proper hardware** for door openings.

B. Where a pair of doors is installed, items listed are per leaf, except locks where inactive door is listed.

1. HJHS Door 201.
   a. Continuous hinge.
   b. Closer with cushion stop.
   c. Exit device with exterior trim and key override with night latch function; dogging.
   d. Threshold.
   e. Weatherstripping.

2. HJHS Door 401.
   a. Continuous hinge.
   b. Closer with cushion stop.
   c. Exit device with exterior trim and key override with night latch function; dogging.
   d. Exit device with exterior trim; dogging.
   e. Threshold.
   f. Flat plate threshold.
   g. Weatherstripping.
   h. Removable mullion.

END OF SECTION

SECTION 08 80 00 - GLAZING

PART 1 GENERAL

1.1 SUMMARY

A. Section includes glass glazing, non-rated for hollow metal doors, flush wood doors and aluminum storefronts.

B. Related Sections:
1. Section 07 90 00 - Joint Protection: Sealant and back-up material other than glazing sealants.
2. Section 08 13 14 - Standard Steel Doors: Glazed doors.
3. Section 08 14 16 - Flush Wood Doors: Glazed doors.
4. Section 08 41 13 - Aluminum-Framed Entrances and Storefronts.

1.2 REFERENCES

A. American National Standards Institute:
1. ANSI Z97.1 - Safety Glazing Materials Used in Buildings Safety.

B. American Society of Civil Engineers:
1. ASCE 7 - Minimum Design Loads for Buildings and Other Structures.

C. ASTM International:
1. ASTM C864 - Standard Specification for Dense Elastomeric Compression Seal Gaskets, Setting Blocks, and Spacers.
2. ASTM C920 - Standard Specification for Elastomeric Joint Sealants.
3. ASTM C1036 - Standard Specification for Flat Glass.
4. ASTM C1048 - Standard Specification for Heat-Treated Flat Glass-Kind HS, Kind FT Coated and Uncoated Glass.
5. ASTM C1172 - Standard Specification for Laminated Architectural Flat Glass.
6. ASTM C1193 - Standard Guide for Use of Joint Sealants.
7. ASTM E84 - Standard Test Method for Surface Burning Characteristics of Building Materials.
8. ASTM E90 - Standard Test Method for Laboratory Measurement of Airborne Sound Transmission Loss of Building Partitions and Elements.
9. ASTM E119 - Standard Test Methods for Fire Tests of Building Construction and Materials.
10. ASTM E330 - Standard Test Method for Structural Performance of Exterior Windows, Curtain Walls, and Doors By Uniform Static Air Pressure Difference.
11. ASTM E576 - Standard Test Method for Frost Point of Sealed Insulating Glass Units in the Vertical Position.
12. ASTM E773 - Standard Test Methods for Seal Durability of Sealed Insulating Glass Units.
13. ASTM E774 - Standard Specification for Sealed Insulating Glass Units.

D. Consumer Products Safety Commission:
1. CPSC 16 CFR 1201 - Safety Standard for Architectural Glazing.

E. Glass Association of North America:
   1. GANA - Sealant Manual.
   2. GANA - Glazing Manual.

F. National Fire Protection Association:
   1. NFPA 80 - Standard for Fire Doors, Fire Windows.
   2. NFPA 252 - Standard Methods of Fire Tests of Door Assemblies.

G. Underwriters Laboratories Inc.:
   1. UL 10C - Positive Pressure Fire Tests of Door Assemblies.
   2. UL - Building Materials Directory.

1.3 PERFORMANCE REQUIREMENTS

A. Provide glass and glazing materials for continuity of building enclosure vapor retarder and air barrier:
   1. To utilize inner pane of multiple pane sealed units for continuity of air barrier and vapor retarder seal.
   2. To maintain continuous air barrier and vapor retarder throughout glazed assembly from glass pane to heel bead of glazing sealant.

B. Exterior Glass Deflection: Maximum of 1/175 of glass edge length or 3/4 inch, whichever is less with full recovery of glazing materials.

C. Interior Glass Deflection: Maximum differential deflection for two adjacent unsupported edges when 50 plf force is applied to one panel at any point up to 42 inches above finished floor less than thickness of glass.

D. Seismic Loads: Design and size components to withstand seismic loads and sway displacement as calculated in accordance with 2015 International Building Code.

E. Structural Design: Design in accordance with 2015 International Building Code for most critical combination of wind, seismic, and dead loads.

1.4 SUBMITTALS

A. Section 01 33 00 - Submittal Procedures: Submittal procedures.

B. Product Data:
   1. Glass: Provide structural, physical, and thermal and solar optical performance characteristics, size limitations, special handling or installation requirements.
   2. Glazing Sealants, Compounds and Accessories: Provide chemical, functional, and environmental characteristics, limitations, special application requirements. Identify full range of available colors where exposed.

C. Design Data:
   1. Submit design calculations for glass resisting wind loads and live loads signed and sealed by a professional engineer licensed in the State of Illinois.

D. Samples:
   1. Glass: Submit two samples 12 x 12 inch in size, illustrating each glass units, coloration and design.
   2. Glazing Materials: Submit 12 inch long bead of glazing sealant and gaskets, color as selected.

E. Manufacturer's Certificate: Certify sealed insulating glass, meets or exceeds specified requirements.

1.5 QUALITY ASSURANCE

A. Perform Work in accordance with GANA Glazing Manual for glazing installation methods.

1.6 QUALIFICATIONS

A. Installer: Company specializing in performing Work of this section with minimum three years experience.

1.7 ENVIRONMENTAL REQUIREMENTS

A. Section 01 60 00 - Product Requirements.

B. Do not install glazing when ambient temperature is less than 50 degrees F.

C. Maintain minimum ambient temperature before, during and 24 hours after installation of glazing compounds.

1.8 WARRANTY

A. Section 01 70 00 - Execution and Closeout Requirements: Product warranties and product bonds.

B. Furnish ten year warranty to include coverage for sealed glass units from seal failure, interpane dusting or misting, and replacement of same.

PART 2 PRODUCTS

2.1 GLAZING

A. Manufacturers:
   1. PPG Industries, Inc.
   2. Pilkington LOF.
   3. Nippon Electric Glass Company, Ltd.
   4. Viracon.
   5. Substitutions: Section 01 60 00 – Product Requirements.

2.2 COMPONENTS

A. Safety Glass (Type SG): CPSC 16 CFR 1201 Category II, minimum thickness 1/4 inch unless otherwise indicated. Safety glass shall be labeled and label shall be visible after glazing.
   1. Clear Tempered Glass (Type SG-CT): ASTM C1048, Kind FT Fully tempered, Condition A, uncoated, Type 1 transparent flat, Class 1 clear, Quality q3 glazing select; with horizontal tempering and Low E coating.
   2. Clear Tempered Glass (Type SG-TT): ASTM C1048, Kind FT Fully tempered, Condition C, Type 1 transparent flat, Class 1 clear, Quality q3 glazing select.

B. Insulated Glass Units (Type IG-1): Total unit thickness 1 inch.
   1. Double Pane Insulated Glass Units: ASTM E774 Class A and E773; with silicone sealant edge seal; purge interpane space with dry hermetic air.
      a. Outer Pane: Glass Type: SG-TT.
      b. Inner Pane: Glass Type SG-CT with Low E coating on third glass surface form building exterior.
   2. Insulated Glass Unit Edge Seal Construction: Aluminum mitered and spigoted corners.

2.3 ACCESSORIES

A. Elastomeric Glazing Sealants: Materials compatible with adjacent materials including glass, insulating glass seals, and glazing channels.
   1. Silicone Glazing Sealant: ASTM C920, Type S, Grade NS, Class and Use suitable for glazing application indicated; single component; chemical curing; capable of water immersion without loss of properties; non-bleeding, non-staining, cured Shore A hardness of 15 to 25.
      a. Acceptable Manufacturers and products:
         1) General Electric – “Silpruf”.
         2) General Electric – “Silglaze 2400”.
         3) Woodmount Products – “Chem-Caulk 1000”.
         4) Dow Corning – “790”.
         5) Pecora – “863”.
      b. Color: As selected by Architect / Engineer.
      c. Structural Silicone: Furnish high-modulus structural silicone glazing materials where sealant bonds glass to substrate.

B. Glazing Gaskets: ASTM C864 Option I or II, resilient polyvinyl chloride extruded shape to suit glazing channel retaining slot.
   1. Color: Black.

C. Pre-Formed Glazing Tape: Size to suit application.
   1. Glazing Tape: Closed cell polyvinyl chloride foam, coiled on release paper over adhesive on two sides, maximum water absorption by volume of 2 percent, designed for compression of 25 percent to effect an air barrier and vapor retarder seal.

D. Setting Blocks: ASTM C864 Option I, Neoprene, 80 to 90 Shore A durometer hardness, length of 0.1 inch for each square foot of glazing or minimum 4 inch x width of glazing rabbet space minus 1/16 inch x height to suit glazing method and pane weight and area.

E. Spacer Shims: ASTM C864 Option I, Neoprene, 50 to 60 Shore A durometer hardness, minimum 3 inch long x one half the height of glazing stop x thickness to suit application, self adhesive on one face.

PART 3 EXECUTION

3.1 EXAMINATION

A. Section 01 30 00 - Administrative Requirements: Coordination and project conditions.

B. Verify openings for glazing are correctly sized and within acceptable tolerance.

C. Verify surfaces of glazing channels or recesses are clean, free of obstructions impeding moisture movement, weeps are clear, and ready to receive glazing.

3.2 PREPARATION

A. Clean contact surfaces with solvent and wipe dry.

B. Seal porous glazing channels or recesses with substrate compatible primer or sealer.

C. Prime surfaces scheduled to receive sealant.

3.3 INSTALLATION

A. Perform installation in accordance with GANA Glazing Manual.
   1. Glazing Sealants: Comply with ASTM C1193.

B. Interior Wet/Dry Method (Tape and Sealant) Installation:
   1. Cut glazing tape to length and install against permanent stops, projecting 1/16 inch above sight line.
   2. Place setting blocks at 1/4 points with edge block no more than 6 inches from corners.
   3. Rest glazing on setting blocks and push against tape to ensure full contact at perimeter of pane or unit.
   4. Install removable stops, spacer shims inserted between glazing and applied stops at 24 inch intervals, 1/4 inch below sight line.
   5. Fill gaps between pane and applied stop with elastomeric glazing sealant to depth equal to bite on glazing, to uniform and level line.
   6. Trim protruding tape edge.

C. Interior Wet Method (Compound and Compound) Installation:
   1. Install glazing resting on setting blocks. Install applied stop and center pane by use of spacer shims at 24-inch centers, kept 1/4 inch below sight line.
   2. Locate and secure glazing pane using glazers' clips.
   3. Fill gaps between glazing and stops with glazing compound until flush with sight line. Tool surface to straight line.

3.4 FIELD QUALITY CONTROL

A. Section 01 70 00 - Execution and Closeout Requirements: Field inspecting, testing, adjusting, and balancing.

B. Monitor quality of glazing.

3.5 CLEANING

A. Section 01 70 00 - Execution and Closeout Requirements: Final cleaning.

B. Remove glazing materials from finish surfaces.

C. Remove labels after Work is complete.

D. Clean glass and adjacent surfaces.

3.6 PROTECTION OF INSTALLED CONSTRUCTION

A. Section 01 70 00 - Execution and Closeout Requirements: Protecting installed construction.

B. After installation, mark pane with an 'X' by using removable plastic tape or paste.

3.7 SCHEDULE

A. Exterior Glazing: Type IG-1, wet/dry method with silicone glazing sealant.

END OF SECTION

SECTION 09 21 16 - GYPSUM BOARD ASSEMBLIES

PART 1 GENERAL

1.1 SUMMARY

A. Section Includes:
   1. Gypsum board and joint treatment.

1.2 REFERENCE STANDARDS

A. ASTM International:
   1. ASTM C475/C475M - Standard Specification for Joint Compound and Joint Tape for Finishing Gypsum Board.
   2. ASTM C514 - Standard Specification for Nails for the Application of Gypsum Board.
   3. ASTM C557 - Standard Specification for Adhesives for Fastening Gypsum Wallboard to Wood Framing.
   4. ASTM C645 - Standard Specification for Nonstructural Steel Framing Members.
   5. ASTM C665 - Standard Specification for Mineral-Fiber Blanket Thermal Insulation for Light Frame Construction and Manufactured Housing.
   6. ASTM C754 - Standard Specification for Installation of Steel Framing Members to Receive Screw-Attached Gypsum Panel Products.
   7. ASTM C840 - Standard Specification for Application and Finishing of Gypsum Board.
   8. ASTM C954 - Standard Specification for Steel Drill Screws for the Application of Gypsum Panel Products or Metal Plaster Bases to Steel Studs from 0.033 in. (0.84 mm) to 0.112 in. (2.84 mm) in Thickness.
   9. ASTM C1002 - Standard Specification for Steel Drill Screws for the Application of Gypsum Panel Products or Metal Plaster Bases.
   10. ASTM C1007 - Standard Specification for Installation of Load Bearing (Transverse and Axial) Steel Studs and Related Accessories.
   11. ASTM C1178/C1178M - Standard Specification for Coated Glass Mat Water-Resistant Gypsum Backing Panel.
   12. ASTM C1280 - Standard Specification for Application of Gypsum Sheathing.
   13. ASTM C1288 - Standard Specification for Discrete Non-Asbestos Fiber-Cement Interior Substrate Sheets.
   14. ASTM C1325 - Standard Specification for Non-Asbestos Fiber-Mat Reinforced Cement Substrate Sheets.
   15. ASTM C1396/C1396M - Standard Specification for Gypsum Board.
   16. ASTM E84 - Standard Test Method for Surface Burning Characteristics of Building Materials.
   17. ASTM E90 - Standard Test Method for Laboratory Measurement of Airborne Sound Transmission Loss of Building Partitions and Elements.
   18. ASTM E119 - Standard Test Methods for Fire Tests of Building Construction and Materials.
   19. ASTM F1667 - Standard Specification for Driven Fasteners: Nails, Spikes, and Staples.

B. American Society of Civil Engineers:
   1. ASCE 7 - Minimum Design Loads for Buildings and Other Structures.

C. Gypsum Association:
   1. GA 214 - Recommended Levels of Gypsum Board Finish.
   2. GA 216 - Application and Finishing of Gypsum Board.
   3. GA 600 - Fire Resistance Design Manual Sound Control.

D. Intertek Testing Services (Warnock Hersey Listed):
   1. WH - Certification Listings.

E. National Fire Protection Association:
   1. NFPA 265 - Standard Methods of Fire Tests for Evaluating Room Fire Growth Contribution of Textile Coverings on Full Height Panels and Walls, Method B.
   2. NFPA 286 - Standard Methods of Fire Tests for Evaluating Room Fire Growth Contribution of Wall and Ceiling Interior Finish.

F. Underwriters Laboratories Inc.:
   1. UL - Fire Resistance Directory.

1.3 SUBMITTALS

A. Section 01 33 00 - Submittal Procedures: Requirements for submittals.

B. Product Data: Submit data on gypsum board and joint tape.

C. Shop Drawings:
   1. Indicate installation details required for seismic design loads.

1.4 QUALITY ASSURANCE

A. Perform Work in accordance with ASTM C840, ASTM C1280; GA-214, GA-216 and GA-600.

1.5 QUALIFICATIONS

A. Manufacturer: Company specializing in manufacturing products specified in this section with minimum three years documented experience.

B. Installer: Company specializing in performing Work of this section with minimum three years experience.

PART 2 PRODUCTS

2.1 GYPSUM BOARD ASSEMBLIES

A. Manufacturer List:
   1. CertainTeed.
   2. Georgia-Pacific.
   3. National Gypsum Co.
   4. United States Gypsum Co.
   5. Substitutions: Section 01 60 00 – Product Requirements.

B. Performance / Design Criteria:
   1. Seismic Loads: Design and size components to withstand seismic loads and sway displacement as calculated according to ASCE 7 and applicable codes for Seismic Design Category indicated on Drawings.

2.2 COMPONENTS

A. Gypsum Board Materials: ASTM C1396.
   1. Fire Rated Gypsum Board: ASTM C36; fire resistive type, UL or WH rated; 5/8-inch thick, maximum available length in place; ends square cut, tapered edges.

2.3 ACCESSORIES

A. Gypsum Board Accessories: ASTM C1047; plastic; corner beads, edge trim, and expansion joints.
   1. Plastic Accessories: PVC plastic.

B. Joint Materials: ASTM C475; GA-216; reinforcing tape, joint compound, and water.

C. Gypsum Board Screws: ASTM C1002; length to suit application.
   1. Screws for Steel Framing: Type S.

PART 3 EXECUTION

3.1 EXAMINATION

A. Section 01 70 00 - Execution and Closeout Requirements: Requirements for installation examination.

B. Verify site conditions are ready to receive work and opening dimensions are as indicated on shop drawings and as instructed by manufacturer.

3.2 INSTALLATION

A. Gypsum Board Installation:
   1. Install gypsum board in accordance with GA-216 and GA-600.
   2. Erect single layer fire rated gypsum board in most economical direction, with edges and ends occurring over firm bearing.
   3. Use screws when fastening gypsum board to metal furring or framing.
   4. Place control joints as indicated on Drawings.
   5. Place corner beads at external corners. Use longest practical length. Place edge trim where gypsum board abuts dissimilar materials.

B. Joint Treatment:
   1. Tape, fill, and sand exposed joints, edges, and corners to produce smooth surface ready to receive finishes.
   2. Feather coats on to adjoining surfaces so that camber is maximum 1/32 inch.

C. Provide skim coat of joint compound in accordance with GA-214 to provide finish level as specified.

3.3 SCHEDULE

A. Finishes in accordance with GA-214 Level:
   1. Level 4: Ceilings exposed to view.

END OF SECTION

SECTION 09 51 13 - ACOUSTICAL PANEL CEILINGS

PART 1 GENERAL

1.1 SUMMARY

A. Section includes suspended metal grid ceiling system, perimeter trim and acoustic panels, and accessories.

B. Related Requirements:
   1. Section 07 90 00 - Joint Protection.

1.2 REFERENCE STANDARDS

A. ASTM International:
   1. ASTM C635 - Standard Specification for the Manufacture, Performance, and Testing of Metal Suspension Systems for Acoustical Tile and Lay-in Panel Ceilings.
   2. ASTM C636 - Standard Practice for Installation of Metal Ceiling Suspension Systems for Acoustical Tile and Lay-In Panels.
   3. ASTM E84 - Standard Test Method for Surface Burning Characteristics of Building Materials.
   4. ASTM E119 - Standard Test Methods for Fire Tests of Building Construction and Materials.
   5. ASTM E580 - Standard Practice for Application of Ceiling Suspension Systems for Acoustical Tile and Lay-in Panels in Areas Requiring Seismic Restraint.
   6. ASTM E1264 - Standard Classification for Acoustical Ceiling Products.

B. Ceilings and Interior Systems Construction Association:
   1. CISCA - Acoustical Ceilings: Use and Practice.

C. Intertek Testing Services (Warnock Hersey Listed):
   1. WH - Certification Listings.

D. National Fire Protection Association:
   1. NFPA 255 – Standard Method of Test of Surface Burning Characteristics of Building materials.
   2. NFPA 286 - Standard Methods of Fire Tests for Evaluating Contribution of Wall and Ceiling Interior Finish to Room Fire Growth.

E. Underwriters Laboratories Inc.:
   1. UL - Fire Resistance Directory.
   2. UL 723 - Tests for Surface Burning Characteristics of Building Materials.

1.3 PERFORMANCE REQUIREMENTS

A. Suspension System: Rigidly secure acoustic ceiling system including integral mechanical and electrical components with maximum deflection of 1:240.

1.4 SUBMITTALS

A. Section 01 33 00 - Submittal Procedures: Requirements for submittals.

B. Product Data: Submit data on metal grid system components and acoustic units.

C. Shop Drawings:
   1. Indicate grid layout and related dimensioning, junctions with other work or ceiling finishes, interrelation of mechanical and electrical items related to system. Indicate method of suspension where interference exists.
      a. Indicate installation details required for seismic design loads.

D. Samples:
   1. Submit two samples 4 x 4 inch in size illustrating material and finish of acoustic units.
   2. Submit two samples each, 12 inches long, of suspension system main runner, cross runner, perimeter molding.

E. Manufacturer's Instructions: Submit special procedures, perimeter conditions requiring special attention.

1.5 QUALITY ASSURANCE

A. Conform to CISCA requirements.

1.6 QUALIFICATIONS

A. Manufacturer: Company specializing in manufacturing products specified in this section with minimum three years experience.

B. Installer: Company specializing in performing Work of this section with minimum three years experience.

1.7 ENVIRONMENTAL REQUIREMENTS

A. Section 01 60 00 - Product Requirements.

B. Maintain uniform temperature of minimum 55 degrees F, and maximum humidity of 65 to 70 percent prior to, during, and after acoustic unit installation.

1.8 SEQUENCING

A. Section 01 10 00 - Summary: Requirements for sequencing.

B. Sequence Work to ensure acoustic ceilings are not installed until building is enclosed, sufficient heat is provided, dust generating activities have terminated, and overhead work is completed, tested, and approved.

C. Install acoustic units after interior wet work is dry.

PART 2 PRODUCTS

2.1 SUSPENDED ACOUSTICAL CEILINGS

A. Manufacturers:
   1. Armstrong World Industries:
      a. Textured 949 panel.
   2. Substitutions: Not permitted.

2.2 COMPONENTS

A. Acoustic Panels: ASTM E1264, conforming to the following:
   1. Size: 24 x 24 inches.
   2. Thickness: 5/8 inches.
   3. Composition: Mineral fiber.
   4. NRC Range: 0.55.
   5. Edge: Square.
   6. Surface Color: White.

B. Grid:
   1. Non-fire Rated Grid: ASTM C635, Heavy Duty; exposed T components die cut and interlocking.
      a. Armstrong: Prelude XL.
      b Celotex: Classic Stab System.
      c. USG: Donn DX .
      d. Substitutions: Section 01 60 00 - Product Requirements.
   2. Grid Materials: Commercial quality cold rolled steel with galvanized coating.
   3. Exposed Grid Surface Width: As per applicable code for seismic design category indicated on Drawings.
   4. Grid Finish: White color.
   5. Accessories: Stabilizer bars, clips, splices, perimeter moldings, and hold down clips, as required for suspended grid system.
   6. Support Channels and Hangers: Galvanized Primed steel; size and type to suit application, seismic requirements, and ceiling system flatness requirement specified.

2.3 ACCESSORIES

A. Gasket For Perimeter Moldings: Closed cell rubber sponge tape.

B. Touch-up Paint: Type and color to match acoustic and grid units.

C. Seismic Bracing: As required to meet seismic performance requirements.

PART 3 EXECUTION

3.1 EXAMINATION

A. Section 01 70 00 - Execution and Closeout Requirements: Requirements for installation examination.

B. Verify layout of hangers will not interfere with other Work.

3.2 INSTALLATION

A. Lay-In Grid Suspension System:
1. Install suspension system in accordance with ASTM C636 and as supplemented in this section.
2. Install suspension system in accordance with ASTM E580.
3. Install system capable of supporting imposed loads with maximum deflection of 1/240 maximum.
4. Locate system on room axis according to reflected plan.
5. Install after major above ceiling work is complete. Coordinate location of hangers with other work.
6. Install hanger clips during steel deck erection. Install additional hangers and inserts as required.
7. Hang suspension system independent of walls, columns, ducts, pipes and conduit. Where carrying members are spliced, avoid visible displacement of face plane of adjacent members.
8. Where ducts or other equipment prevent regular spacing of hangers, reinforce nearest affected hangers and related carrying channels to span extra distance.
9. Do not support components on main runners or cross runners when weight causes total dead load to exceed deflection capability. Support fixture loads by supplementary hangers located within 6 inches of each corner; or support components independently.
10. Do not eccentrically load system, or produce rotation of runners.
11. Perimeter Molding:
    a. Install edge molding at intersection of ceiling and vertical surfaces with continuous gasket.
    b. Use longest practical lengths.
    c. Miter corners.
    d. Install at junctions with other interruptions.
12. Laterally brace entire suspended system as required for seismic design category as indicated on Drawings.

B. Acoustic Units:
1. Fit acoustic units in place, free from damaged edges or other defects detrimental to appearance and function.
2. Install units after above ceiling work is complete.
3. Install acoustic units level, in uniform plane, and free from twist, warp, and dents.
4. Cutting Acoustic Units:
    a. Cut to fit irregular grid and perimeter edge trim.
    b. Cut square reveal edges to field cut units.
5. Install hold-down clips to retain panels tight to grid system within 20 feet of exterior door.

3.3 TOLERANCES

A. Section 01 40 00 - Quality Requirements: Tolerances.

B. Maximum Variation from Flat and Level Surface: 1/8 inch in 10 feet.

C. Maximum Variation from Plumb of Grid Members Caused by Eccentric Loads: 2 degrees.

END OF SECTION

SECTION 09 65 00 - RESILIENT FLOORING

PART 1 GENERAL

1.1 SUMMARY

A. Section includes resilient tile flooring and resilient base.

1.2 REFERENCES

A. ASTM International:
   1. ASTM D 543 - Standard Practices for Evaluating Resistance to Chemical Reagents.
   2. ASTM D5116 - Standard for Determination of Organic Emissions From Indoor Materials/Products.
   3. ASTM D2047 - Standard Test Method for Static Coefficient of Friction as Measured by the James Machine.
   4. ASTM E662 - Standard Test Method for Specific Optical Density of Smoke Generated by Solid Materials.
   5. ASTM E 1155 - Standard Test Method for Determining FF (Floor Flatness) and FL (Floor Levelness) Numbers.
   6. ASTM F 710 - Standard Practice for Preparing Concrete Floors to Receive Resilient Flooring.
   7. ASTM F 970 - Standard Test Method for Static Load Limit.
   8. ASTM F1066 - Standard Specification for Vinyl Composition Floor Tile.
   9. ASTM F1344 - Standard Specification for Rubber Floor Tile.
   10. ASTM F1700 - Standard Specification for Solid Vinyl Floor Tile.
   11. ASTM F1861 - Standard Specification for Resilient Wall Base.
   12. ASTM F2169 - 12 Standard Specification for Resilient Stair Treads.

B. National Fire Protection Association:
   1. NFPA 253 - Standard Method of Test for Critical Radiant Flux for Floor Covering Systems Using a Radiant Heat Energy Source.

1.3 SUBMITTALS

A. Section 01 33 00 - Submittal Procedures: Submittal procedures.

B. Shop Drawings: Indicate custom patterns and inlay designs.

C. Product Data: Submit data describing physical and performance characteristics; including sizes, patterns and colors available; and installation instructions.

D. Samples:
   1. Submit manufacturer's complete set of color samples for initial selection.
   2. Submit two samples, 2 x 2 inch size illustrating color and pattern for each product specified.

1.4 CLOSEOUT SUBMITTALS

A. Section 01 70 00 - Execution and Closeout Requirements: Closeout procedures.

B. Operation and Maintenance Data: Submit maintenance procedures, recommended maintenance materials, and suggested schedule for cleaning, stripping, and re-waxing.

1.5 QUALIFICATIONS

A. Manufacturer: Company specializing in manufacturing products specified in this section with minimum five years experience.

B. Installer: Company specializing in performing Work of this section with minimum five years experience.

1.6 DELIVERY, STORAGE, AND HANDLING

A. Section 01 60 00 - Product Requirements: Product storage and handling requirements.

B. Protect roll materials from damage by storing on end.

1.7 ENVIRONMENTAL REQUIREMENTS

A. Section 01 60 00 - Product Requirements.

B. Maintain temperature in storage area between 55 degrees F and 90 degrees F.

C. Store materials for not less than 48 hours prior to installation in area of installation at temperature of 70 degrees F to achieve temperature stability. Thereafter, maintain conditions above 55 degrees F.

1.8 EXTRA MATERIALS

A. Section 01 70 00 - Execution and Closeout Requirements: Spare parts and maintenance products.

B. Furnish 20 square feet of flooring and 10 lineal feet of base of each type and color specified.

PART 2 PRODUCTS

2.1 VINYL COMPOSITION TILE FLOORING

A. Manufacturers:
1. Armstrong World Industries, Inc. – Excelon Series.
2. Substitutions: Not permitted.

B. Vinyl Composition Tile: ASTM F1066:
   1. Size: 12 x 12 inch.
   2. Thickness: 0.125 inch.
   3. Pattern: Marbleized.
   4. Color: As selected by Architect / Engineer.

2.2 RESILIENT BASE

A. Manufacturers:
   1. Armstrong.
   2. Flexco.
   3. Johnsonite Inc.
   4. Roppe Corp.
   5. Inpro.
   6. Substitutions: Not Permitted.

B. Base: ASTM F1861Type TS – Vulcanized Rubber; coved style:
   1. Height: 4 inch.
   2. Thickness: 0.125 inch thick.
   3. Finish: Matte.
   4. Length: Roll.
   5. Accessories: Premolded external corners and end stops.
   6. Color: As selected by Architect / Engineer.

2.3 ACCESSORIES

A. Subfloor Filler: Premix latex; type recommended by adhesive material manufacturer.

B. Primers and Adhesives: Waterproof; types recommended by flooring manufacturer for high moisture content concrete slab.

C. Moldings and Edge Strips: Same material as flooring.

D. Feature Strips: Of same material as flooring.

E. Sealer and Wax: Types recommended by flooring manufacturer.

PART 3 EXECUTION

3.1 EXAMINATION

A. Section 01 30 00 - Administrative Requirements: Verification of existing conditions before starting Work.

B. Verify concrete floors are dry to maximum moisture content as recommended by manufacturer, and exhibit negative alkalinity, carbonization, and dusting.

C. Verify floor and lower wall surfaces are free of substances capable of impairing adhesion of new adhesive and finish materials.

3.2 PREPARATION

A. Remove sub-floor ridges and bumps. Fill minor low spots, cracks, joints, holes, and other defects with sub-floor filler to achieve smooth, flat, hard surface.

B. Prohibit traffic until filler is cured.

C. Clean substrate.

D. Apply primer as required to prevent "bleed-thru" or interference with adhesion by substances cannot be removed.

3.3 INSTALLATION - TILE FLOORING

A. Mix tile from container to ensure shade variations are consistent when tile is placed.

B. Lay flooring with joints and seams parallel to building lines to produce symmetrical tile pattern.

C. Install tile to pattern as shown on Drawings. Allow minimum 1/2 full size tile width at room or area perimeter. Multiple colors and random layouts may be required in areas scheduled to receive tile where no pattern is indicated.

D. Scribe flooring to walls, columns, cabinets, floor outlets, and other appurtenances to produce tight joints.

E. Where floor finishes are different on opposite sides of door, terminate flooring under centerline of door.

F. Install edge strips at unprotected or exposed edges, where flooring terminates, and where indicated.

G. Install flooring in recessed floor access covers. Maintain floor pattern.

H. Install feature strips and floor markings where indicated. Fit joints tightly.

3.4 INSTALLATION - BASE

A. Fit joints tightly and make vertical.

B. Miter internal corners. At external corners, use premolded units. Premolded boots or blocks are not acceptable. At exposed ends, use premolded units.

C. Install base on solid backing. Bond tightly to wall and floor surfaces.

D. Scribe and fit to door frames and other interruptions.

3.5 CLEANING

A. Section 01 70 00 - Execution and Closeout Requirements: Final cleaning.

B. Remove excess adhesive from floor, base, and wall surfaces without damage.

C. Clean, seal, and maintain resilient flooring products.

3.6 PROTECTION OF INSTALLED CONSTRUCTION

A. Section 01 70 00 - Execution and Closeout Requirements: Protecting installed construction.

B. Prohibit traffic on resilient flooring for 48 hours after installation.

END OF SECTION

SECTION 09 90 00 - PAINTING AND COATING

PART 1 GENERAL

1.1 SUMMARY

A. Section includes surface preparation and field application of paints and other coatings.

1.2 REFERENCES

A. ASTM International:
1. ASTM D16 - Standard Terminology Relating to Paint, Varnish, Lacquer, and Related Products.
2. ASTM D4442 - Standard Test Methods for Direct Moisture Content Measurement of Wood and Wood-Base Materials.
3. ASTM E84 - Standard Test Method for Surface Burning Characteristics of Building Materials.

B. Green Seal:
1. GC-03 - Anti-Corrosive Paints.
2. GS-11 - Product Specific Environmental Requirements.

C. National Fire Protection Association:
1. NFPA 255 - Standard Method of Test of Surface Burning Characteristics of Building Materials.

D. Painting and Decorating Contractors of America:
1. PDCA - Architectural Painting Specification Manual.

E. South Coast Air Quality Management District:
1. SCAQMD Rule 1113 - Architectural Coatings.

F. SSPC: The Society for Protective Coatings:
1. SSPC - Steel Structures Painting Manual.

G. Underwriters Laboratories Inc.:
1. UL 723 - Tests for Surface Burning Characteristics of Building Materials.

1.3 DEFINITIONS

A. Conform to ASTM D16 for interpretation of terms used in this section.

1.4 SUBMITTALS

A. Section 01 33 00 - Submittal Procedures: Submittal procedures.

B. Product Data: Submit data on finishing products and special coatings.

C. Samples:
   1. Submit two paper chip samples illustrating full range of colors available for each surface finishing product scheduled.

D. Manufacturer's Installation Instructions: Submit special surface preparation procedures, and substrate conditions requiring special attention.

1.5 CLOSEOUT SUBMITTALS

A. Section 01 70 00 - Execution and Closeout Requirements: Closeout procedures.

B. Operation and Maintenance Data: Submit data on cleaning, touch-up, and repair of painted and coated surfaces.

1.6 QUALIFICATIONS

A. Manufacturer: Company specializing in manufacturing products specified in this section with minimum three years documented experience.

B. Applicator: Company specializing in performing Work of this section with minimum three years documented experience and approved by manufacturer.

1.7 DELIVERY, STORAGE, AND HANDLING

A. Section 01 60 00 - Product Requirements: Product storage and handling requirements.

B. Deliver products to site in sealed and labeled containers; inspect to verify acceptability.

C. Container Label: Include manufacturer's name, type of paint, brand name, lot number, brand code, coverage, surface preparation, drying time, cleanup requirements, color designation, and instructions for mixing and reducing.

D. Paint Materials: Store at minimum ambient temperature of 45 degrees F and maximum of 90 degrees F, in ventilated area, and as required by manufacturer's instructions.

1.8 ENVIRONMENTAL REQUIREMENTS

A. Section 01 60 00 - Product Requirements.

B. Do not apply materials when surface and ambient temperatures are outside temperature ranges required by paint product manufacturer.

C. Minimum Application Temperatures for Latex Paints: 45 degrees F for interiors; 50 degrees F for exterior; unless required otherwise by manufacturer's instructions.

D. Provide lighting level of 80 foot candle measured mid-height at substrate surface.

1.9 SEQUENCING

A. Section 01 10 00 - Summary: Work sequence.

B. Verify existing conditions and requirements of other trades before starting Work.

C. Sequence application to the following:
1. Do not apply finish coats until paintable sealant is applied.
2. Back prime wood trim before installation of trim.

1.10 WARRANTY

A. Section 01 70 00 - Execution and Closeout Requirements: Product warranties and product bonds.

B. Furnish five-year manufacturer warranty for paints and coatings.

1.11 EXTRA MATERIALS

A. Section 01 70 00 - Execution and Closeout Requirements: Spare parts and maintenance products.

B. Supply 1 gallon of each color, type, and surface texture; store where directed by Owner.

C. Label container with color, type, and room locations, in addition to manufacturer's label.

PART 2 PRODUCTS

2.1 PAINTS AND COATINGS

A. Manufacturers:
1. The Glidden Co.
2. MAB Paints.
3. Benjamin Moore.
4. Sherwin-Williams.
5. Pittsburg Paints.
6. Substitutions: Not permitted.

2.2 COMPONENTS

A. Coatings: Ready mixed, except field catalyzed coatings. Prepare coatings:
1. To soft paste consistency, capable of being readily and uniformly dispersed to homogeneous coating.
2. For good flow and brushing properties.
3. Capable of drying or curing free of streaks or sags.

B. Accessory Materials: Linseed oil, shellac, turpentine, paint thinners and other materials not specifically indicated but required to achieve finishes specified; commercial quality.

C. Patching Materials: Latex filler.

D. Fastener Head Cover Materials: Latex filler.

PART 3 EXECUTION

3.1 EXAMINATION

A. Verify surfaces and substrate conditions are ready to receive Work as instructed by product manufacturer.

B. Examine surfaces scheduled to be finished prior to commencement of Work. Report conditions capable of affecting proper application.

C. Test shop applied primer for compatibility with subsequent cover materials.

D. Do not apply paint pavement markings to concrete surfaces until concrete has cured for 28 days.

E. Measure moisture content of surfaces using electronic moisture meter. Do not apply finishes unless moisture content of surfaces are below the following maximums:
1. Plaster and Gypsum Wallboard: 12 percent.
2. Masonry, Concrete and Concrete Unit Masonry: 12 percent.

3.2 PREPARATION

A. Surface Appurtenances: Remove electrical plates, hardware, light fixture trim, escutcheons, and fittings prior to preparing surfaces or finishing.

B. Surfaces: Correct defects and clean surfaces capable of affecting Work of this section. Remove or repair existing coatings exhibiting surface defects.

C. Marks: Seal with shellac those which may bleed through surface finishes.

D. Impervious Surfaces: Remove mildew by scrubbing with solution of tri-sodium phosphate and bleach. Rinse with clean water and allow surface to dry.

E. Gypsum Board Surfaces: Fill minor defects with filler compound. Spot prime defects after repair.

F. Galvanized Surfaces: Remove surface contamination and oils and wash with solvent. Apply coat of etching primer.

G. Concrete Surfaces Scheduled to Receive Paint Finish: Remove dirt, loose mortar, scale, salt or alkali powder, and other foreign matter. Remove oil and grease with solution of tri-sodium phosphate; rinse well and allow to dry. Remove stains caused by weathering of corroding metals with solution of sodium metasilicate after thoroughly wetting with water. Allow to dry.

H. Shop Primed Steel Surfaces: Sand and scrape to remove loose primer and rust. Feather edges to make touch-up patches inconspicuous. Clean surfaces with solvent. Prime bare steel surfaces.

I. Uncoated Steel and Iron Surfaces: Remove grease, mill scale, weld splatter, dirt, and rust. Where heavy coatings of scale are evident, remove by hand wire brushing or sandblasting; clean by washing with solvent. Apply treatment of phosphoric acid solution, ensuring weld joints, bolts, and nuts are similarly cleaned. Spot prime paint after repairs.

3.3 APPLICATION

A. Multiple colors shall be selected and accent walls shall be a component of the Project.

B. Do not apply finishes to surfaces that are not dry. Allow applied coats to dry before next coat is applied.

C. Apply each coat to uniform appearance. Apply each coat of paint slightly darker than preceding coat unless specified otherwise.

D. Sand wood and metal surfaces lightly between coats to achieve required finish.

E. Vacuum clean surfaces of loose particles. Use tack cloth to remove dust and particles just prior to applying next coat.

F. Where clear finishes are required, tint fillers to match wood. Work fillers into grain before set. Wipe excess from surface.

G. Prime concealed surfaces of interior wood surfaces scheduled to receive stain or varnish finish with gloss varnish reduced 25 percent with thinner.

H. Finishing Mechanical And Electrical Equipment:
1. Refer to Division 22, Division 23, and Division 26 for schedule of color-coding and identification banding of equipment, ductwork, piping, and conduit.
2. Paint shop primed equipment.
3. Remove unfinished louvers, grilles, covers, and access panels on mechanical and electrical components and paint separately.
4. Prime and paint insulated and exposed pipes, conduit, boxes, insulated and exposed ducts, hangers, brackets, collars and supports, except where items are shop finished.
5. Paint exposed conduit and electrical equipment occurring in finished areas.
6. Reinstall electrical cover plates, hardware, light fixture trim, escutcheons, and fittings removed prior to finishing.

3.4 FIELD QUALITY CONTROL

A. Section 01 70 00 - Execution and Closeout Requirements: Field inspecting, testing, adjusting, and balancing.

B. Inspect and test questionable coated areas.

3.5 CLEANING

A. Section 01 70 00 - Execution and Closeout Requirements: Final cleaning.

B. Collect waste material which may constitute fire hazard, place in closed metal containers, and remove daily from site.

3.6 PROTECTION OF INSTALLED CONSTRUCTION

A. Protect Work of other trades and surfaces not being painted.

B. Automatic fire sprinklers must not be painted and must be protected from paint over spray. Any sprinklers inadvertently painted must be replaced rather than cleaned.

C. Protect completed Work from damage by other trades.

3.7 SCHEDULE - SHOP PRIMED ITEMS FOR SITE FINISHING

A. Metal Fabrications (Section 05 50 00): Exposed surfaces of interior and exterior lintels.

B. Metal Railings (Section 05 52 00): Exposed surfaces.

3.8 SCHEDULE - INTERIOR SURFACES

A. Steel:
   1. One coat SW Pro Industrial Pro-Cryl Primer; B66-310 or approved equal.
      a. Two to four mils dry.
   2. Two coats SW ProMar 200 Alkyd Semi-Gloss; B34W200 or approved equal.
      a. Four mils wet, 1.7 mils dry.

B. Steel - Galvanized:
   1. One coat SW Pro Industrial Pro-Cryl Primer; B66-310 or approved equal.
      a. Two to four mils dry.
   2. Two coats SW ProMar 200 Alkyd Semi-Gloss; B34W200 or approved equal.
      a. Four mils wet, 1.7 mils dry per coat.

C. Gypsum Board Ceilings:
   1. One coat SW PrepRite 200 Latex Primer; B28W200 or approved equal.
      a. Four mils wet, 1.2 mils dry.
   2. Two coats SW ProMar 200 Latex Semi-Gloss; B300W200 or approved equal.
      a. Four mils wet, 1.4 mils dry per coat.

3.8 SCHEDULE – EXTERIOR SURFACES

A. Steel:
   1. One coat SW Pro Industrial Pro-Cryl Universal Primer, B66-310 Series or approved equal.
      a. Ten mils wet, 4 mils dry.
   2. Two coats SW Metalatex Acrylic Semi-Gloss, B42 Series or approved equal.
      a. Four mils wet, 1.5 mils dry per coat.

B. Steel Galvanized:
   1. Two coats SW Metalatex Semi-Gloss, B42 Series or approved equal.
      a. Four mils wet, 1.5 mils dry per coat.

END OF SECTION

SECTION 260519 - LOW-VOLTAGE ELECTRICAL POWER CONDUCTORS AND CABLES

PART 1 - GENERAL

1.1 SUMMARY

A. Section Includes:

1. Copper building wire rated 600 V or less.
2. Connectors, splices, and terminations rated 600 V and less.

1.2 SUBMITTALS

A. Product Data: No product data required when using specified materials that have listing/labeling information marked & visible during construction.

B. Field quality-control reports.

PART 2 - PRODUCTS

2.1 COPPER BUILDING WIRE

A. Description: Flexible, insulated and uninsulated, drawn copper current-carrying conductor with an overall insulation layer or jacket, or both, rated 600 V or less.

B. Standards:

1. Listed and labeled as defined in NFPA 70, by a qualified testing agency, and marked for intended location and use.
2. RoHS compliant.

C. Conductors: Copper, complying with ASTM B 3 for bare annealed copper and with ASTM B 8 for stranded conductors.

D. Conductor Insulation:

1. Type THWN-2: Comply with UL 83.

2.2 CONNECTORS AND SPLICES

A. Description: Factory-fabricated connectors, splices, and lugs of size, ampacity rating, material, type, and class for application and service indicated; listed and labeled as defined in NFPA 70, by a qualified testing agency, and marked for intended location and use.

B. Lugs: One piece, seamless, designed to terminate conductors specified in this Section.

PART 3 - EXECUTION

3.1 CONDUCTOR AND INSULATION MATERIAL APPLICATIONS

A. Conductors: Copper; solid for No. 10 AWG and smaller; stranded for No. 8 AWG and larger.

B. Insulation: Type THHN/THWN-2.

3.2 INSTALLATION OF CONDUCTORS AND CABLES

A. Conceal cables in finished walls, ceilings, and floors unless otherwise indicated.

B. Complete raceway installation between conductor and cable termination points prior to pulling conductors and cables.

C. Use manufacturer-approved pulling compound or lubricant where necessary; compound used must not deteriorate conductor or insulation. Do not exceed manufacturer's recommended maximum pulling tensions and sidewall pressure values.

D. Use pulling means, including fish tape, cable, rope, and basket-weave wire/cable grips, that will not damage cables or raceway.

E. Install exposed cables parallel and perpendicular to surfaces of exposed structural members, and follow surface contours where possible.

3.3 CONNECTIONS

A. Tighten electrical connectors and terminals according to manufacturer's published torque-tightening values. If manufacturer's torque values are not indicated, use those specified in UL 486A-486B.

B. Make splices, terminations, and taps that are compatible with conductor material.

C. Wiring at Outlets: Install conductor at each outlet, with at least 6 inches of slack.

3.4 IDENTIFICATION

A. Identify and color-code conductors and cables according to Section 260553 "Identification for Electrical Systems."

B. Identify each spare conductor at each end with identity number and location of other end of conductor, and identify as spare conductor.

3.5 FIELD QUALITY CONTROL

A. Perform tests and inspections.

1. After installing conductors and cables and before electrical circuitry has been energized, test feeder conductors for compliance with requirements.

2. Perform each of the following visual and electrical tests:

   a. Inspect exposed sections of conductor and cable for physical damage and correct connection according to the single-line diagram.
   b. Test bolted connections for high resistance using one of the following:

      1) A low-resistance ohmmeter.
      2) Calibrated torque wrench.
      3) Thermographic survey.

   c. Inspect compression-applied connectors for correct cable match and indentation.
   d. Inspect for correct identification.
   e. Inspect cable jacket and condition.
   f. Insulation-resistance test on each conductor for ground and adjacent conductors. Apply a potential of 500-V dc for 300-V rated cable and 1000-V dc for 600-V rated cable for a one-minute duration.
   g. Continuity test on each conductor and cable.
   h. Uniform resistance of parallel conductors.

B. Cables will be considered defective if they do not pass tests and inspections.

C. Prepare test and inspection reports to record the following:

1. Procedures used.
2. Results that comply with requirements.
3. Results that do not comply with requirements, and corrective action taken to achieve compliance with requirements.

END OF SECTION

SECTION 260526 - GROUNDING AND BONDING FOR ELECTRICAL SYSTEMS

PART 1 - GENERAL

1.1 SUMMARY

A. Section includes grounding and bonding systems and equipment.

1.2 SUBMITTALS

A. Product Data: For each type of product indicated.

B. Field quality control reports.

PART 2 - PRODUCTS

2.1 SYSTEM DESCRIPTION

A. Electrical Components, Devices, and Accessories: Listed and labeled by a qualified testing agency, and marked for intended location and application.

B. Comply with UL 467 for grounding and bonding materials and equipment.

2.2 CONDUCTORS

A. Insulated Conductors: Same as phase and neutral conductors installed in same conduit.

B. Bare Copper Conductors:

1. Solid Conductors: ASTM B 3.
2. Stranded Conductors: ASTM B 8.
3. Tinned Conductors: ASTM B 33.

2.3 CONNECTORS

A. Listed and labeled by an NRTL for applications in which used and for specific types, sizes, and combinations of conductors and other items connected.

B. Welded Connectors: Exothermic-welding kits of types recommended by kit manufacturer for materials being joined and installation conditions.

C. Beam Clamps: Mechanical type, terminal, ground wire access from four directions, with dual, tin-plated or silicon bronze bolts.

D. Cable-to-Cable Connectors: Compression type, copper or copper alloy.

E. Conduit Hubs: Mechanical type, terminal with threaded hub.

PART 3 - EXECUTION

3.1 APPLICATIONS

A. Conductors:

1. Ground Electrode Conductors: Install solid conductor for No. 6 AWG and smaller, and stranded conductors for No. 4 AWG and larger.
2. Equipment Ground Conductors: Install solid conductor for No. 10 AWG and smaller, and stranded conductors for No. 8 AWG and larger

3.2 INSTALLATION

A. Install insulated equipment grounding conductors with all feeders and branch circuits.

B. Route along shortest and straightest paths possible unless otherwise indicated or required by Code.

C. Avoid obstructing access or placing conductors where they may be subjected to strain, impact, or damage.

3.3 FIELD QUALITY CONTROL

A. Tests and Inspections:

1. After installing grounding system but before permanent electrical circuits have been energized, test for compliance with requirements.
2. Inspect physical and mechanical condition. Verify tightness of accessible, bolted, electrical connections with a calibrated torque wrench according to manufacturer's written instructions.

B. Grounding system will be considered defective if it does not pass tests and inspections.

C. Prepare test and inspection reports.

D. Report measured ground resistances that exceed10 Ohms.

E. Excessive Ground Resistance: If resistance to ground exceeds specified values, notify Architect promptly and include recommendations to reduce ground resistance.

END OF SECTION 260526

SECTION 260529 - HANGERS AND SUPPORTS FOR ELECTRICAL SYSTEMS

PART 1 - GENERAL

1.1 SUMMARY

A. Section Includes:

1. Slotted support systems.
2. Conduit and cable support devices.
3. Mounting, anchoring, and attachment components, including powder-actuated fasteners, mechanical expansion anchors, concrete inserts, clamps, through bolts, toggle bolts, and hanger rods.

1.2 SUBMITTALS

A. Product Data: For each type of product.

1. Include construction details, material descriptions, dimensions of individual components and profiles, and finishes for the following:

    a. Slotted support systems, hardware, and accessories.
    b. Clamps.
    c. Hangers.
    d. Sockets.
    e. Eye nuts.
    f. Fasteners.
    g. Anchors.
    h. Saddles.
    i. Brackets.

2. Include rated capacities and furnished specialties and accessories.

PART 2 - PRODUCTS

2.1 SUPPORT, ANCHORAGE, AND ATTACHMENT COMPONENTS

A. Slotted Support Systems:

1. Preformed channels and angles with minimum 13/32-inch diameter holes at a maximum of 8 inches o.c. in at least one surface.
2. Channel Width: 1-5/8 inches.
3. Standard: Comply with MFMA-4 factory-fabricated components for field assembly.

4. Material for Channel, Fittings, and Accessories:

   a. Galvanized steel:

      1) Metallic Coatings: Hot-dip galvanized after fabrication and applied according to MFMA-4.
      2) Painted Coatings: Manufacturer's standard painted coating applied according to MFMA-4.
      3) Protect finishes on exposed surfaces from damage by applying a strippable, temporary protective covering before shipping.

   b. Aluminum:

      1) Channel Material: 6063-T5 aluminum alloy.
      2) Fittings and Accessories Material: 5052-H32 aluminum alloy.

   c. Nonmetallic:

      1) Fittings and Accessories: Products provided by channel and angle manufacturer and designed for use with those items.
      2) Fitting and Accessory Materials: Same as those for channels and angles or stainless steel.
      3) Rated Strength: Selected to suit applicable load criteria.

B. Conduit and Cable Support Devices: Steel, malleable-iron, or Stainless-steel hangers, clamps, and associated fittings, designed for types and sizes of raceway or cable to be supported.

C. Mounting, Anchoring, and Attachment Components: Items for fastening electrical items or their supports to building surfaces include the following:

   1. Powder-Actuated Fasteners: Threaded-steel stud, for use in hardened portland cement concrete, steel, or wood, with tension, shear, and pullout capacities appropriate for supported loads and building materials where used.
   2. Mechanical-Expansion Anchors: Insert-wedge-type, zinc-coated or stainless steel, for use in hardened portland cement concrete, with tension, shear, and pullout capacities appropriate for supported loads and building materials where used.
   3. Concrete Inserts: Steel or malleable-iron, slotted support system units are similar to MSS Type 18 units and comply with MFMA-4 or MSS SP-58.
   4. Clamps for Attachment to Steel Structural Elements: MSS SP-58 units are suitable for attached structural element.
   5. Through Bolts: Structural type, hex head, and high strength. Comply with ASTM F 3125/F 3125M,Grade A325.
   6. Toggle Bolts: Steel springhead type.
   7. Hanger Rods: Threaded steel.

PART 3 - EXECUTION

3.1 APPLICATION

A. Comply with the following standards for application and installation requirements of hangers and supports, except where requirements on Drawings or in this Section are stricter:

1. NECA 1.
2. NECA 101

B. Comply with requirements for raceways and boxes specified in Section 260533 "Raceways and Boxes for Electrical Systems."

C. Maximum Support Spacing and Minimum Hanger Rod Size for Raceways: Space supports for EMT, IMC, and RMC as scheduled in NECA 1, where its Table 1 lists maximum spacings that are less than those stated in NFPA 70. Minimum rod size shall be 1/4 inch in diameter.

D. Multiple Raceways or Cables: Install trapeze-type supports fabricated with slotted support system, sized so capacity can be increased by at least 25 percent in future without exceeding specified design load limits.

1. Secure raceways and cables to these supports with two-bolt conduit clamps or single-bolt conduit clamps using spring friction action for retention in support channel.

3.2 SUPPORT INSTALLATION

A. Strength of Support Assemblies: Where not indicated, select sizes of components so strength will be adequate to carry present and future static loads within specified loading limits. Minimum static design load used for strength determination shall be weight of supported components plus 200 lb.

B. Mounting and Anchorage of Surface-Mounted Equipment and Components: Anchor and fasten electrical items and their supports to building structural elements by the following methods unless otherwise indicated by code:

1. To Wood: Fasten with lag screws or through bolts.
2. To New Concrete: Bolt to concrete inserts.
3. To Masonry: Approved toggle-type bolts on hollow masonry units and expansion anchor fasteners on solid masonry units.
4. To Existing Concrete: Expansion anchor fasteners.
5. Instead of expansion anchors, powder-actuated driven threaded studs provided with lock washers and nuts may be used in existing standard-weight concrete 4 inches thick or greater. Do not use for anchorage to lightweight-aggregate concrete or for slabs less than 4 inches thick.
6. To Steel: Beam clamps (MSS SP-58, Type 19, 21, 23, 25, or 27), complying with MSS SP-69.
7. To Light Steel: Sheet metal screws.

8. Items Mounted on Hollow Walls and Nonstructural Building Surfaces: Mount cabinets, panelboards, disconnect switches, control enclosures, pull and junction boxes, transformers, and other devices on slotted-channel racks attached to substrate.

C. Drill holes for expansion anchors in concrete at locations and to depths that avoid the need for reinforcing bars.

3.3 PAINTING

A. Touchup:

1. Clean field welds and abraded areas of shop paint.
2. Paint exposed areas immediately after erecting hangers and supports.
3. Use same materials as used for shop painting.
4. Comply with SSPC-PA 1 requirements for touching up field-painted surfaces.
5. Apply paint by brush or spray to provide minimum dry film thickness of 2.0 mils.

B. Galvanized Surfaces: Clean welds, bolted connections, and abraded areas and apply zinc-rich primer to comply with ASTM A 780.

END OF SECTION

SECTION 260533 - RACEWAYS AND BOXES FOR ELECTRICAL SYSTEMS

PART 1 - GENERAL

1.1 SUMMARY

A. Section Includes:

1. Metal conduits and fittings.
2. Surface raceways.
3. Boxes, enclosures, and cabinets.

1.2 SUBMITTALS

A. Product Data: No product data required when using specified materials that have listing/labeling information marked on product and visible for inspection during construction.

PART 2 - PRODUCTS

2.1 METAL CONDUITS AND FITTINGS

A. Metal Conduit:

1. Listing and Labeling: Listed and labeled as defined in NFPA 70, by a qualified testing agency, and marked for intended location and application.
2. GRC: Comply with ANSI C80.1 and UL 6.
3. IMC: Comply with ANSI C80.6 and UL 1242.
4. EMT: Comply with ANSI C80.3 and UL 797.
5. FMC: Comply with UL 1; zinc-coated steel.
6. LFMC: Flexible steel conduit with PVC jacket and complying with UL 360.

B. Metal Fittings:

1. Comply with NEMA FB 1 and UL 514B.
2. Listing and Labeling: Listed and labeled as defined in NFPA 70, by a qualified testing agency, and marked for intended location and application.
3. Fittings, General: Listed and labeled for type of conduit, location, and use.
4. Fittings for EMT:

    a. Material: Steel or die cast.
    b. Type: compression type only.

5. Expansion Fittings: Material to match conduit type, complying with UL 651, rated for environmental conditions where installed, and including flexible external bonding jumper.

C. Joint Compound for IMC or GRC: Approved, as defined in NFPA 70, by authorities having jurisdiction for use in conduit assemblies, and compounded for use to lubricate and protect threaded conduit joints from corrosion and to enhance their conductivity.

2.2 SURFACE RACEWAYS

A. Listing and Labeling: Surface raceways and tele-power poles shall be listed and labeled as defined in NFPA 70, by a qualified testing agency, and marked for intended location and application.

B. Surface Metal Raceways: Galvanized steel with snap-on covers complying with UL 5. Prime coated, ready for field painting.

2.3 BOXES, ENCLOSURES, AND CABINETS

A. General Requirements for Boxes, Enclosures, and Cabinets: Boxes, enclosures, and cabinets installed in wet locations shall be listed for use in wet locations.

B. Sheet Metal Outlet and Device Boxes: Comply with NEMA OS 1 and UL 514A.

C. Cast-Metal Outlet and Device Boxes: Comply with NEMA FB 1, ferrous alloy or aluminum, Type FD, with gasketed cover.

D. Luminaire Outlet Boxes: Nonadjustable, designed for attachment of luminaire weighing 50 lb. Outlet boxes designed for attachment of luminaires weighing more than 50 lb shall be listed and marked for the maximum allowable weight.

E. Small Sheet Metal Pull and Junction Boxes: NEMA OS 1.

F. Box extensions used to accommodate new building finishes shall be of same material as recessed box.

G. Device Box Dimensions: 4 inches square by 2-1/8 inches deep.

H. Gangable boxes are prohibited.

PART 3 - EXECUTION

3.1 INSTALLATION

A. Comply with NECA 1 and NECA 101 for installation requirements except where requirements on Drawings or in this article are stricter. Comply with NECA 102 for aluminum conduits. Comply with NFPA 70 limitations for types of raceways allowed in specific occupancies and number of floors.

B. Do not install raceways or electrical items on any "explosion-relief" walls or rotating equipment.

C. Do not fasten conduits onto the bottom side of a metal deck roof.

D. Keep raceways at least 6 inches away from parallel runs of flues and steam or hot-water pipes. Install horizontal raceway runs above water and steam piping.

E. Complete raceway installation before starting conductor installation.

F. Arrange stub-ups so curved portions of bends are not visible above finished slab.

G. Make bends in raceway using large-radius preformed ells. Field bending shall be according to NFPA 70 minimum radii requirements. Use only equipment specifically designed for material and size involved.

H. Conceal conduit within finished walls, ceilings, and floors unless otherwise indicated. Install conduits parallel or perpendicular to building lines.

I. Support conduit within 12 inches of enclosures to which attached.

J. Threaded Conduit Joints, Exposed to Wet, Damp, Corrosive, or Outdoor Conditions: Apply listed compound to threads of raceway and fittings before making up joints. Follow compound manufacturer's written instructions.

K. Raceway Terminations at Locations Subject to Moisture or Vibration: Use insulating bushings to protect conductors including conductors smaller than No. 4 AWG.

L. Terminate threaded conduits into threaded hubs or with locknuts on inside and outside of boxes or cabinets. Install bushings on conduits up to 1-1/4-inch trade size and insulated throat metal bushings on 1-1/2-inch trade size and larger conduits terminated with locknuts. Install insulated throat metal grounding bushings on service conduits.

M. Install raceways square to the enclosure and terminate at enclosures with locknuts. Install locknuts hand tight plus 1/4 turn more.

N. Do not rely on locknuts to penetrate nonconductive coatings on enclosures. Remove coatings in the locknut area prior to assembling conduit to enclosure to assure a continuous ground path.

O. Cut conduit perpendicular to the length. For conduits 2-inch trade size and larger, use roll cutter or a guide to make cut straight and perpendicular to the length.

P. Install pull wires in empty raceways. Use polypropylene or monofilament plastic line with not less than 200-lb tensile strength. Leave at least 12 inches of slack at each end of pull wire. Cap underground raceways designated as spare above grade alongside raceways in use.

Q. Surface Raceways:

1. Install surface raceway with a minimum 2-inch radius control at bend points.
2. Secure surface raceway with screws or other anchor-type devices at intervals not exceeding 48 inches and with no less than two supports per straight raceway section. Support surface raceway according to manufacturer's written instructions. Tape and glue are not acceptable support methods.

R. Install devices to seal raceway interiors at accessible locations. Locate seals so no fittings or boxes are between the seal and the following changes of environments. Seal the interior of all raceways at the following points:

1. Conduit extending from interior to exterior of building.
2. Where otherwise required by NFPA 70.

S. Flexible Conduit Connections: Comply with NEMA RV 3. Use a maximum of 60 inches of flexible conduit for recessed and semirecessed luminaires, equipment subject to vibration, noise transmission, or movement; and for transformers and motors.

1. Use LFMC in damp or wet locations.

T. Mount boxes at heights indicated on Drawings. If mounting heights of boxes are not individually indicated, give priority to ADA requirements. Install boxes with height measured to center of box unless otherwise indicated.

U. Horizontally separate boxes mounted on opposite sides of walls so they are not in the same vertical channel.

V. Locate boxes so that cover or plate will not span different building finishes.

W. Support boxes of three gangs or more from more than one side by spanning two framing members or mounting on brackets specifically designed for the purpose.

X. Fasten junction and pull boxes to or support from building structure. Do not support boxes by conduits.

3.2 PROTECTION

A. Protect coatings and finishes from damage and deterioration.

1. Repair damage to galvanized finishes with zinc-rich primer recommended by manufacturer.

END OF SECTION 260533

SECTION 260553 - IDENTIFICATION FOR ELECTRICAL SYSTEMS

PART 1 - GENERAL

1.1 SUMMARY

A. Section Includes:

1. Color and legend requirements for raceways, conductors, and warning labels and signs.
2. Labels.
3. Signs.
4. Fasteners for labels and signs.

1.2 SUBMITTALS

A. Product Data: For each type of product.

1. Include construction details, material descriptions, dimensions of individual components and profiles, and finishes for electrical identification products.

B. Identification Schedule: For each piece of electrical equipment and electrical system components to be an index of nomenclature for electrical equipment and system components used in identification signs and labels. Use same designations indicated on Drawings.

PART 2 - PRODUCTS

2.1 PERFORMANCE REQUIREMENTS

A. Comply with ASME A13.1.

B. Comply with NFPA 70.

C. Comply with ANSI Z535.4 for safety signs and labels.

D. Adhesive-attached labeling materials, including label stocks, laminating adhesives, and inks used by label printers, shall comply with UL 969.

E. Thermal Movements: Allow for thermal movements from ambient and surface temperature changes.

2.2 COLOR AND LEGEND REQUIREMENTS

A. Raceways and Cables Carrying Circuits at 600 V or Less:

1. Black letters on an orange field.

2. Legend: Indicate voltage and system or service type.

B. Color-Coding for Phase Identification:

1. Color shall be factory applied for conductors No. 8 AWG and smaller. May be factory or field applied for sizes No. 6 AWG and larger.

2. Colors for 240V Circuits:

a. Phase A: Black.
b. Phase B: Red.
c. Neutral: White

3. Color for Equipment Grounds: Bare copper or Green.

2.3 LABELS

A. Self-Adhesive Wraparound Labels: Preprinted, 3-mil thick, polyester or vinyl flexible label with acrylic pressure-sensitive adhesive.

B. Self-Adhesive Labels: Polyester or Vinyl, thermal, transfer-printed, 3-mil thick, multicolor, weather and UV resistant, pressure-sensitive adhesive labels, configured for intended use and location.

2.4 SIGNS

A. Laminated Plastic Signs:

1. Thickness:

a. For signs up to 20 sq. in.: minimum 1/16 inch thick.
b. For signs larger than 20 sq. in.: 1/8 inch thick.
c. Engraved legend with black letters on white face.
d. Punched or drilled for mechanical fasteners or self-adhesive.

B. Fasteners: Self-tapping, stainless-steel screws or stainless-steel machine screws with nuts and flat and lock washers.

PART 3 - EXECUTION

3.1 PREPARATION

A. Self-Adhesive Identification Products: Before applying electrical identification products, clean substrates of substances that could impair bond, using materials and methods recommended by manufacturer of identification product.

3.2 INSTALLATION

A. Verify and coordinate identification names, abbreviations, colors, and other features with requirements in other Sections requiring identification applications, Drawings, Shop Drawings, manufacturer's wiring diagrams, and operation and maintenance manual. Use consistent designations throughout Project.

B. Install identifying devices before installing acoustical ceilings and similar concealment.

C. Verify identity of each item before installing identification products.

D. Coordinate identification with Project Drawings, manufacturer's wiring diagrams, and operation and maintenance manual.

E. Apply identification devices to surfaces that require finish after completing finish work.

F. Install signs with approved legend to facilitate proper identification, operation, and maintenance of electrical systems and connected items.

G. Identification for Raceways: Identification shall completely encircle conduit.

H. Self-Adhesive Wraparound Labels: Secure tight to surface at a location with high visibility and accessibility.

I. Self-Adhesive Labels:

1. On each item, install unique designation label that is consistent with wiring diagrams, schedules, and operation and maintenance manual.
2. Unless otherwise indicated, provide a single line of text with 1/2-inch high letters on 1-1/2-inch high label; where two lines of text are required, use labels 2 inches high.

J. Self-Adhesive Vinyl Tape: Secure tight to surface at a location with high visibility and accessibility.

1. Field-Applied, Color-Coding Conductor Tape: Apply in half-lapped turns for a minimum distance of 6 inches where splices or taps are made. Apply last two turns of tape with no tension to prevent possible unwinding.

K. Laminated Plastic Signs:

1. Attach signs that are not self-adhesive type with mechanical fasteners appropriate to the location and substrate.
   a. Do not use mechanical fasteners where fasteners will violate the NEMA 250 integrity of enclosures.
2. Unless otherwise indicated, provide a single line of text with 1/2-inch high letters on 1-1/2-inch high sign; where two lines of text are required, use labels 2 inches high.

END OF SECTION 260553

SECTION 260923 - LIGHTING CONTROL DEVICES

PART 1 - GENERAL

1.1 SUMMARY

A. Section Includes:

1. Indoor occupancy sensors.

1.2 SUBMITTALS

A. Product Data: For each type of product.

B. Shop Drawings:

1. Show installation details for the following:

a. Occupancy sensors.

2. Interconnection diagrams showing field-installed wiring.
3. Include diagrams for power, signal, and control wiring.

C. Operation and Maintenance Data: For each type of lighting control device to include in operation and maintenance manuals.

1.3 WARRANTY

A. Manufacturer's Warranty: Manufacturer and Installer agree to repair or replace lighting control devices that fail(s) in materials or workmanship within specified warranty period.

1. Failures include, but are not limited to, the following:

a. Faulty operation of lighting control devices.

2. Warranty Period: Two year(s) from date of Substantial Completion.

PART 2 - PRODUCTS

2.1 INDOOR OCCUPANCY SENSORS

A. General Requirements for Sensors:

1. Ceiling-mounted, solid-state indoor occupancy sensors.
2. Dual technology.

3. Integrated power pack.
4. Hardwired connection to switch.
5. Listed and labeled as defined in NFPA 70, by a qualified testing agency, and marked for intended location and application.
6. Operation:

    a. Occupancy Sensor: Unless otherwise indicated, turn lights on when coverage area is occupied, and turn them off when unoccupied; with a time delay for turning lights off, adjustable over a minimum range of 1 to 15 minutes.

7. Power: Line voltage.
8. Mounting:

    a. Sensor: Suitable for mounting in any position on a standard outlet box.
    b. Relay: Externally mounted through a 1/2-inch knockout in a standard electrical enclosure.
    c. Time-Delay and Sensitivity Adjustments: Recessed and concealed behind hinged door.

9. Indicator: Digital display, to show when motion is detected during testing and normal operation of sensor.
10. Bypass Switch: Override the "on" function in case of sensor failure.
11. Automatic Light-Level Sensor: Adjustable from 2 to 200 fc; turn lights off when selected lighting level is present.

B. Dual-Technology Type: Ceiling mounted; detect occupants in coverage area using PIR and ultrasonic detection methods. The particular technology or combination of technologies that control on-off functions is selectable in the field by operating controls on unit.

1. Sensitivity Adjustment: Separate for each sensing technology.
2. Detector Sensitivity: Detect occurrences of 6-inch-minimum movement of any portion of a human body that presents a target of not less than 36 sq. in., and detect a person of average size and weight moving not less than 12 inches in either a horizontal or a vertical manner at an approximate speed of 12 inches/s.
3. Detection Coverage (Standard Room): Detect occupancy anywhere within a circular area of 1000 sq. ft. when mounted on a 96-inch-high ceiling.

2.2 CONDUCTORS AND CABLES

A. Power Wiring to Supply Side of Remote-Control Power Sources: Not smaller than No. 12 AWG. Comply with requirements in Section 260519 "Low-Voltage Electrical Power Conductors and Cables."

PART 3 - EXECUTION

3.1 EXAMINATION

A. Examine lighting control devices before installation. Reject lighting control devices that are wet, moisture damaged, or mold damaged.

B. Examine walls and ceilings for suitable conditions where lighting control devices will be installed.

C. Proceed with installation only after unsatisfactory conditions have been corrected.

3.2 SENSOR INSTALLATION

A. Comply with NECA 1.

B. Coordinate layout and installation of ceiling-mounted devices with other construction that penetrates ceilings or is supported by them, including light fixtures, HVAC equipment, smoke detectors, fire-suppression systems, and partition assemblies.

C. Install and aim sensors in locations to achieve not less than 90-percent coverage of areas indicated. Do not exceed coverage limits specified in manufacturer's written instructions.

3.3 CONTACTOR INSTALLATION

A. Comply with NECA 1.

3.4 WIRING INSTALLATION

A. Comply with NECA 1.

B. Wiring Method: Comply with Section 260519 "Low-Voltage Electrical Power Conductors and Cables." Minimum conduit size is 1/2 inch.

C. Wiring within Enclosures: Comply with NECA 1. Separate power-limited and non-power-limited conductors according to conductor manufacturer's written instructions.

D. Size conductors according to lighting control device manufacturer's written instructions unless otherwise indicated.

E. Splices, Taps, and Terminations: Make connections only on numbered terminal strips in junction, pull, and outlet boxes; terminal cabinets; and equipment enclosures.

3.5 IDENTIFICATION

A. Identify components and power and control wiring according to Section 260553 "Identification for Electrical Systems."
   1. Identify circuits or luminaires controlled by photoelectric and occupancy sensors at each sensor.

3.6 FIELD QUALITY CONTROL

A. Perform the following tests and inspections:

   1. Operational Test: After installing time switches and sensors, and after electrical circuitry has been energized, start units to confirm proper unit operation.
   2. Test and adjust controls and safeties. Replace damaged and malfunctioning controls and equipment.

B. Lighting control devices will be considered defective if they do not pass tests and inspections.

C. Prepare test and inspection reports.

3.7 ADJUSTING

A. Occupancy Adjustments: When requested within 12 months from date of Substantial Completion, provide on-site assistance in adjusting lighting control devices to suit actual occupied conditions. Provide up to two visits to Project during other-than-normal occupancy hours for this purpose.

   1. For occupancy sensors, verify operation at outer limits of detector range. Set time delay to suit Owner's operations.

END OF SECTION

SECTION 262416 - PANELBOARDS

PART 1 - GENERAL

1.1 SUMMARY

A. Section Includes:

1. Circuit breakers for existing panelboards.

1.2 SUBMITTALS

A. Product Data:

1. Include materials and switching & overcurrent protective devices.
2. Include dimensions and manufacturers' technical data on features, performance, electrical characteristics, ratings, and finishes.

1.3 QUALITY ASSURANCE

A. Manufacturer Qualifications: ISO 9001 or 9002 certified.

PART 2 - PRODUCTS

2.1 OVERCURRENT PROTECTIVE DEVICES

A. Molded Case Circuit Breakers:

1. Comply with UL 489, with interrupting capacity to match rating of installed panelboard.
2. Circuit breakers for installation in existing panelboards shall be by same manufacturer as installed panelboard or listed for use in installed panelboard.
3. Thermal-Magnetic Circuit Breakers: Inverse time-current element for low-level overloads and instantaneous magnetic trip element for short circuits.
4. Circuit breaker operating mechanism:

    a. Common tripping of all poles, which provides quick-make, quick-break contact action.
    b. The circuit-breaker handle shall be over center, be trip free, and reside in a tripped position between on and off to provide local trip indication.
    c. Circuit-breaker escutcheon shall be clearly marked on and off in addition to providing international I/O markings.

PART 3 - EXECUTION

3.1 INSTALLATION

A. Comply with NECA 1.

B. Install according to NECA 407 and NEMA PB 1.1.

C. Install overcurrent protective devices according to manufacturer's installation instructions.

3.2 IDENTIFICATION

A. Update panelboard directory to indicate installed circuit loads.

3.3 FIELD QUALITY CONTROL

A. Tests and Inspections:

1. Perform each visual and mechanical inspection and electrical test for circuit breakers stated in NETA ATS. Do not perform optional tests. Certify compliance with test parameters.
2. Correct malfunctioning units on-site, where possible, and retest to demonstrate compliance; otherwise, replace with new units and retest.

B. Installation will be considered defective if devices do not pass tests and inspections.

C. Prepare test and inspection reports, including a certified report that identifies panelboards included and that describes scanning results, with comparisons of the two scans. Include notation of deficiencies detected, remedial action taken, and observations after remedial action.

3.4 ADJUSTING

A. Adjust moving parts and operable components to function smoothly, and lubricate as recommended by manufacturer.

END OF SECTION 262416

SECTION 262726 - WIRING DEVICES

PART 1 - GENERAL

1.1 SUMMARY

A. Section Includes:

1. Standard-grade receptacles, 125 V, 20 A.
2. GFCI receptacles, 125 V, 20 A.
3. Wall plates.

1.2 DEFINITIONS

A. GFCI: Ground-fault circuit interrupter.

1.3 SUBMITTALS

A. Product Data: For each type of product.

B. Shop Drawings: List of legends and description of materials and process used for pre-marking wall plates.

C. Field quality-control reports.

D. Operation and Maintenance Data: For wiring devices to include in all manufacturers' packing-label warnings and instruction manuals that include labeling conditions.

PART 2 - PRODUCTS

2.1 GENERAL WIRING-DEVICE REQUIREMENTS

A. Wiring Devices, Components, and Accessories: Listed and labeled as defined in NFPA 70, by a qualified testing agency, and marked for intended location and use.

B. Comply with NFPA 70.

C. Comply with NEMA WD 1.

D. Device Color:

1. Wiring Devices Connected to Normal Power System: Ivory.

E. Wall Plate Color: For plastic covers, match device color.

F. Source Limitations: Obtain each type of wiring device and associated wall plate from single source from single manufacturer.

2.2 STANDARD-GRADE RECEPTACLES, 125 V, 20 A

A. Duplex Receptacles, 125 V, 20 A:

1. Description: Two pole, three wire, and self-grounding.
2. Configuration: NEMA WD 6, Configuration 5-20R.
3. Standards: Comply with UL 498 and FS W-C-596.

2.3 GFCI RECEPTACLES, 125 V, 20 A

A. Weather-Resistant, GFCI Duplex Receptacles, 125 V, 20 A:

B. Description:

1. Integral GFCI with "Test" and "Reset" buttons and LED indicator light.
2. Two pole, three wire, and self-grounding.
3. Integral shutters that operate only when a plug is inserted in the receptacle.
4. Square face.

C. Configuration: NEMA WD 6, Configuration 5-15R.

D. Type: Feed through.

E. Standards: Comply with UL 498 and UL 943 Class A.

2.4 WALL PLATES

A. Single Source: Obtain wall plates from same manufacturer of wiring devices.

B. Single and combination types shall match corresponding wiring devices.

1. Plate-Securing Screws: Metal with head color to match plate finish.
2. Material for Finished Spaces:

   a. Steel with white baked enamel, suitable for field painting.
   b. Smooth, high-impact thermoplastic.

3. Material for Unfinished Spaces: Galvanized steel.
4. Material for Damp Locations: Cast aluminum with spring-loaded lift cover, and listed and labeled for use in wet and damp locations.

C. Wet-Location, Weatherproof Cover Plates: NEMA 250, complying with Type 3R, weather-resistant**,** die-cast aluminum with lockable cover.

PART 3 - EXECUTION

3.1 INSTALLATION

A. Comply with NECA 1, including mounting heights listed in that standard, unless otherwise indicated.

B. Coordination with Other Trades:

1. Protect installed devices and their boxes. Do not place wall finish materials over device boxes, and do not cut holes for boxes with routers that are guided by riding against outside of boxes.
2. Keep outlet boxes free of plaster, drywall joint compound, mortar, cement, concrete, dust, paint, and other material that may contaminate the raceway system, conductors, and cables.
3. Install device boxes in brick or block walls so that the cover plate does not cross a joint unless the joint is troweled flush with the face of the wall.
4. Install wiring devices after all wall preparation, including painting, is complete.

C. Conductors:

1. Do not strip insulation from conductors until right before they are spliced or terminated on devices.
2. Strip insulation evenly around the conductor using tools designed for the purpose. Avoid scoring or nicking of solid wire or cutting strands from stranded wire.
3. The length of free conductors at outlets for devices shall comply with NFPA 70, Article 300, without pigtails.
4. Existing Conductors:

   a. Cut back and pigtail, or replace all damaged conductors.
   b. Straighten conductors that remain and remove corrosion and foreign matter.
   c. Pigtailing existing conductors is permitted, provided the outlet box is large enough.

D. Device Installation:

1. Replace devices that have been in temporary use during construction and that were installed before building finishing operations were complete.
2. Keep each wiring device in its package or otherwise protected until it is time to connect conductors.
3. Do not remove surface protection, such as plastic film and smudge covers, until the last possible moment.
4. Connect devices to branch circuits using pigtails that are not less than 6 inches in length.
5. When there is a choice, use side wiring with binding-head screw terminals. Wrap solid conductor tightly clockwise, two-thirds to three-fourths of the way around terminal screw.
6. Use a torque screwdriver when a torque is recommended or required by manufacturer.
7. When conductors larger than No. 12 AWG are installed on 15- or 20-A circuits, splice No. 12 AWG pigtails for device connections.
8. Tighten unused terminal screws on the device.

9. When mounting into metal boxes, remove the fiber or plastic washers used to hold device-mounting screws in yokes, allowing metal-to-metal contact.

E. Receptacle Orientation:

1. Install ground pin of vertically mounted receptacles up, and on horizontally mounted receptacles to the right.

F. Device Plates: Do not use oversized or extra-deep plates. Repair wall finishes and remount outlet boxes when standard device plates do not fit flush or do not cover rough wall opening.

G. Arrangement of Devices: Unless otherwise indicated, mount flush, with long dimension vertical and with grounding terminal of receptacles on top.

3.2 IDENTIFICATION

A. Comply with Section 260553 "Identification for Electrical Systems."

B. Identify each receptacle with panelboard identification and circuit number. Use hot, stamped, or engraved machine printing with black-filled lettering on face of plate, and durable wire markers or tags inside outlet boxes.

3.3 FIELD QUALITY CONTROL

A. Test Instruments: Use instruments that comply with UL 1436.

B. Test Instrument for Receptacles: Digital wiring analyzer with digital readout or illuminated digital-display indicators of measurement.

C. Tests for Receptacles:

1. Line Voltage: Acceptable range is 105 to 132 V.
2. Percent Voltage Drop under 15-A Load: A value of 6 percent or higher is unacceptable.
3. Ground Impedance: Values of up to 2 ohms are acceptable.
4. GFCI Trip: Test for tripping values specified in UL 1436 and UL 943.
5. Using the test plug, verify that the device and its outlet box are securely mounted.
6. Tests shall be diagnostic, indicating damaged conductors, high resistance at the circuit breaker, poor connections, inadequate fault-current path, defective devices, or similar problems. Correct circuit conditions, remove malfunctioning units and replace with new ones, and retest as specified above.

D. Wiring device will be considered defective if it does not pass tests and inspections.

E. Prepare test and inspection reports.

END OF SECTION

SECTION 265119 - LED INTERIOR LIGHTING

PART 1 - GENERAL

1.1 SUMMARY

A. Section includes the following types of LED luminaires:

1. Recessed, linear.

1.2 DEFINITIONS

A. CCT: Correlated color temperature.

B. CRI: Color Rendering Index.

C. Fixture: See "Luminaire."

D. IP: International Protection or Ingress Protection Rating.

E. LED: Light-emitting diode.

F. Lumen: Measured output of lamp and luminaire, or both.

G. Luminaire: Complete lighting unit, including lamp, reflector, and housing.

1.3 SUBMITTALS

A. Product Data: For each type of product.

1. Include data on features, accessories, and finishes.
2. Include physical description and dimensions of luminaires.
3. Include emergency lighting units, including batteries and chargers.
4. Include life, output (lumens, CCT, and CRI), and energy-efficiency data.

B. Product Schedule: For luminaires.

C. Operation and Maintenance Data: For luminaires and lighting systems to include in operation and maintenance manuals.

1. Provide a list of all lamp types used on Project; use ANSI and manufacturers' codes.

1.4 QUALITY ASSURANCE

A. Provide luminaires from a single manufacturer for each luminaire type.

B. Each luminaire type shall be binned within a three-step MacAdam Ellipse to ensure color consistency among luminaires.

1.5 DELIVERY, STORAGE, AND HANDLING

A. Protect finishes of exposed surfaces by applying a strippable, temporary protective covering before shipping.

1.6 WARRANTY

A. Warranty: Manufacturer and Installer agree to repair or replace components of luminaires that fail in materials or workmanship within specified warranty period.

B. Warranty Period: Five year(s) from date of Substantial Completion.

PART 2 - PRODUCTS

2.1 PERFORMANCE REQUIREMENTS

A. Ambient Temperature: 41 to 104 deg F.

2.2 LUMINAIRE REQUIREMENTS

A. Electrical Components, Devices, and Accessories: Listed and labeled as defined in NFPA 70, by a qualified testing agency, and marked for intended location and application.

B. Factory-Applied Labels: Comply with UL 1598. Locate labels where they will be readily visible to service personnel, but not seen from normal viewing angles when lamps are in place.

C. Recessed luminaires shall comply with NEMA LE 4.

2.3 RECESSED, LINEAR.

A. Nominal Operating Voltage: 120 V ac.

1. Lens Thickness: At least 0.125-inch minimum unless otherwise indicated.

B. Housings:

1. Extruded-aluminum housing and heat sink.
2. Powder-coat finish.
3. With integral mounting provisions.

C. Doors, Frames, and Other Internal Access:

1. Smooth operating, free of light leakage under operating conditions, and designed to permit re-lamping without use of tools.
2. Components are designed to prevent doors, frames, lenses, diffusers, and other components from falling accidentally during re-lamping and when secured in operating position.

2.4 METAL FINISHES

A. Variations in finishes are unacceptable in the same piece. Variations in finishes of adjoining components are acceptable if they are within the range of approved Samples and if they can be and are assembled or installed to minimize contrast.

2.5 LUMINAIRE SUPPORT

A. Comply with requirements in Section 260529 "Hangers and Supports for Electrical Systems" for channel and angle iron supports and nonmetallic channel and angle supports.

PART 3 - EXECUTION

3.1 EXAMINATION

A. Examine substrates, areas, and conditions, with Installer present, for compliance with requirements for installation tolerances and other conditions affecting performance of the Work.

B. Examine roughing-in for luminaire to verify actual locations of luminaire and electrical connections before luminaire installation.

C. Proceed with installation only after unsatisfactory conditions have been corrected.

3.2 INSTALLATION

A. Comply with NECA 1.

B. Install luminaires level, plumb, and square with ceilings and walls unless otherwise indicated.

C. Supports:

1. Sized and rated for luminaire weight.
2. Able to maintain luminaire position after cleaning and re-lamping.
3. Provide support for luminaire without causing deflection of ceiling or wall.
4. Luminaire-mounting devices shall be capable of supporting a horizontal force of 100 percent of luminaire weight and a vertical force of 400 percent of luminaire weight.

D. Ceiling-Grid-Mounted Luminaires:

1. Secure to any required outlet box.
2. Use approved devices and support components to connect luminaire to ceiling grid and building structure in a minimum of four locations, spaced near corners of luminaire.

E. Comply with requirements in Section 260519 "Low-Voltage Electrical Power Conductors and Cables" for wiring connections.

3.3 IDENTIFICATION

A. Identify system components, wiring, cabling, and terminals. Comply with requirements for identification specified in Section 260553 "Identification for Electrical Systems."

3.4 FIELD QUALITY CONTROL

A. Perform the following tests and inspections:

1. Operational Test: After installing luminaires, switches, and accessories, and after electrical circuitry has been energized, test units to confirm proper operation.

B. Luminaire will be considered defective if it does not pass operation tests and inspections.

C. Prepare test and inspection reports.

3.5 ADJUSTING

A. Occupancy Adjustments: When requested within 12 months of date of Substantial Completion, provide on-site assistance in adjusting the direction of aim of luminaires to suit occupied conditions. Make up to two visits to Project during other-than-normal hours for this purpose. Some of this work may be required during hours of darkness.

1. During adjustment visits, inspect all luminaires. Replace lamps or luminaires that are defective.
2. Parts and supplies shall be manufacturer's authorized replacement parts and supplies.
3. Adjust the aim of luminaires in the presence of the Architect.

END OF SECTION

SECTION 265219 - EMERGENCY AND EXIT LIGHTING

PART 1 - GENERAL

1.1 SUMMARY

A. Section Includes:

1. Emergency lighting units.
2. Exit signs.
3. Luminaire supports.

1.2 DEFINITIONS

A. CCT: Correlated color temperature.

B. CRI: Color Rendering Index.

C. Emergency Lighting Unit: A lighting unit with internal emergency battery powered supply and the means for controlling and charging the battery and unit operation.

D. Lumen: Measured output of lamp and luminaire, or both.

E. Luminaire: Complete lighting unit, including lamp, reflector, and housing.

1.3 SUBMITTALS

A. Product Schedule: Use same designations indicated on Drawings.

B. Operation and Maintenance Data: For luminaires and lighting systems to include in emergency, operation, and maintenance manuals.

1.4 DELIVERY, STORAGE, AND HANDLING

A. Protect finishes of exposed surfaces by applying a strippable, temporary protective covering before shipping.

1.5 WARRANTY

A. Warranty: Manufacturer and Installer agree to repair or replace components of luminaires that fail in materials or workmanship within specified warranty period.

1. Warranty Period: Two year(s) from date of Substantial Completion.

PART 2 - PRODUCTS

2.1 GENERAL REQUIREMENTS FOR EMERGENCY LIGHTING

A. Electrical Components, Devices, and Accessories: Listed and labeled as defined in NFPA 70, by a qualified testing agency, and marked for intended location and application.

B. NRTL Compliance: Fabricate and label emergency lighting units, exit signs, and batteries to comply with UL 924.

C. Comply with NFPA 70 and NFPA 101.

D. Comply with NEMA LE 4 for recessed luminaires.

E. Internal Type Emergency Power Unit: Self-contained, modular, battery-inverter unit, factory mounted within luminaire body.

1. Operation: Relay automatically turns lamp on when power-supply circuit voltage drops to 80 percent of nominal voltage or below. Lamp automatically disconnects from battery when voltage approaches deep-discharge level. When normal voltage is restored, relay disconnects lamps from battery, and battery is automatically recharged and floated on charger.
2. Test Push-Button and Indicator Light: Visible and accessible without opening luminaire or entering ceiling space.

   a. Push Button: Push-to-test type, in unit housing, simulates loss of normal power and demonstrates unit operability.
   b. Indicator Light: LED indicates normal power on. Normal glow indicates trickle charge; bright glow indicates charging at end of discharge cycle.

3. Battery: Sealed, maintenance-free, nickel-cadmium type.
4. Charger: Fully automatic, solid-state, constant-current type with sealed power transfer relay.
5. Integral Self-Test: Factory-installed electronic device automatically initiates code-required test of unit emergency operation at required intervals. Test failure is annunciated by an integral audible alarm and a flashing red LED.

2.2 EMERGENCY LIGHTING

A. General Requirements for Emergency Lighting Units: Self-contained units.

B. Emergency Luminaires:

1. As indicated on Drawings.
2. Operating at nominal voltage of 120 V ac.
3. Internal emergency power unit.

C. Emergency Lighting Unit:

1. As indicated on Drawings.

2. Operating at nominal voltage of 120 V ac.
3. Wall/Ceiling mounted with universal junction box adaptor.
4. UV stable thermoplastic housing.
5. Two LED lamp heads.
6. Internal emergency power unit.

2.3 EXIT SIGNS

A. Comply with UL 924; for sign colors, visibility, luminance, and lettering size, comply with authorities having jurisdiction.

B. Internally Lighted Signs:

1. Operating at nominal voltage of 120 V ac.
2. Lamps for AC Operation: LEDs; 50,000 hours minimum rated lamp life.

2.4 MATERIALS

A. Metal Parts:

1. Free of burrs and sharp corners and edges.
2. Sheet metal components shall be steel unless otherwise indicated.
3. Form and support to prevent warping and sagging.

B. Doors, Frames, and Other Internal Access:

1. Smooth operating, free of light leakage under operating conditions.
2. Designed to permit relamping without use of tools.
3. Designed to prevent doors, frames, lenses, diffusers, and other components from falling accidentally during relamping and when secured in operating position.

2.5 METAL FINISHES

A. Appearance of Finished Work: Noticeable variations in same piece are not acceptable. Variations in appearance of adjoining components are acceptable if they are within the range of approved Samples and are assembled or installed to minimize contrast.

2.6 LUMINAIRE SUPPORT COMPONENTS

A. Comply with requirements in Section 260529 "Hangers and Supports for Electrical Systems" for channel and angle iron supports and nonmetallic channel and angle supports.

PART 3 - EXECUTION

3.1 EXAMINATION

A. Examine substrates, areas, and conditions, with Installer present, for compliance with requirements for conditions affecting performance of luminaires.

B. Examine roughing-in for luminaire to verify actual locations of luminaire and electrical connections before luminaire installation.

C. Examine walls, floors, roofs, and ceilings for suitable conditions where emergency lighting luminaires will be installed.

D. Proceed with installation only after unsatisfactory conditions have been corrected.

3.2 INSTALLATION

A. Comply with NECA 1.

B. Install luminaires level, plumb, and square with ceilings and walls unless otherwise indicated.

C. Supports:

1. Sized and rated for emergency power unit weight.
2. Able to maintain luminaire position when testing emergency power unit.
3. Provide support for luminaire and emergency power unit without causing deflection of ceiling or wall.
4. Luminaire-mounting devices shall be capable of supporting a horizontal force of 100 percent of luminaire and emergency power unit weight and vertical force of 400 percent of luminaire weight.

D. Wall-Mounted Luminaire Support:

1. Attached to structural members in walls.
2. Do not attach luminaires directly to gypsum board.

3.3 IDENTIFICATION

A. Identify system components, wiring, cabling, and terminals. Comply with requirements for identification specified in Section 260553 "Identification for Electrical Systems."

3.4 FIELD QUALITY CONTROL

A. Perform the following tests and inspections:

1. Test for Emergency Lighting: Interrupt power supply to demonstrate proper operation. Verify transfer from normal power to battery power and retransfer to normal.

B. Luminaire will be considered defective if it does not pass operation tests and inspections.

C. Prepare test and inspection reports.

3.5 STARTUP SERVICE

A. Perform startup service:
   1. Charge emergency power units and batteries minimum of 24 hours and conduct one-hour discharge test.

3.6 ADJUSTING

A. Adjustments: Within 12 months of date of Substantial Completion, provide on-site visit to do the following:

   1. Inspect all luminaires. Replace lamps, emergency power units , batteries, or signs that are defective.

      a. Parts and supplies shall be manufacturer's authorized replacement parts and supplies.

   2. Conduct short-duration tests on all emergency lighting.

END OF SECTION

SECTION 265619 - LED EXTERIOR LIGHTING

PART 1 - GENERAL

1.1 SUMMARY

A. Section Includes:

1. Exterior solid-state luminaires that are designed for and exclusively use LED lamp technology.
2. Luminaire supports.
3. Luminaire-mounted photoelectric relays.

B. Related Requirements:

1. Section 260923 "Lighting Control Devices" for automatic control of lighting, including photoelectric relays.

1.2 DEFINITIONS

A. CCT: Correlated color temperature.

B. CRI: Color rendering index.

C. IP: International Protection or Ingress Protection Rating.

D. Lumen: Measured output of luminaire.

E. Luminaire: Complete lighting unit, including reflector and housing.

1.3 SUBMITTALS

A. Product Schedule: For luminaires and lamps. Use same designations indicated on Drawings.

B. Operation and Maintenance Data: For luminaires and photoelectric relays to include in operation and maintenance manuals.

C. Furnish extra materials that match products installed and that are packaged with protective covering for storage and identified with labels describing contents.

1.4 QUALITY ASSURANCE

A. Provide luminaires from a single manufacturer for each luminaire type.

B. Each luminaire type shall be binned within a three-step MacAdam Ellipse to ensure color consistency among luminaires.

1.5 DELIVERY, STORAGE, AND HANDLING

A. Protect finishes of exposed surfaces by applying a strippable, temporary protective covering prior to shipping.

1.6 FIELD CONDITIONS

A. Verify existing and proposed utility structures prior to the start of work associated with luminaire installation.

B. Mark locations of exterior luminaires for approval by Architect prior to the start of luminaire installation.

1.7 WARRANTY

A. Warranty: Manufacturer and Installer agree to repair or replace components of luminaires that fail in materials or workmanship within specified warranty period.

1. Failures include, but are not limited to, the following:

   a. Structural failures, including luminaire support components.
   b. Faulty operation of luminaires and accessories.
   c. Deterioration of metals, metal finishes, and other materials beyond normal weathering.

2. Warranty Period: 2 year(s) from date of Substantial Completion.

PART 2 - PRODUCTS

2.1 LUMINAIRE REQUIREMENTS

A. Electrical Components, Devices, and Accessories: Listed and labeled by a qualified testing agency, and marked for intended location and application.

B. UL Compliance: Comply with UL 1598 and listed for wet location.

C. CRI of 80 . CCT of 4100 K .

D. L70 lamp life of 50,000hours.

E. Lamps dimmable from 100 percent to 0 percent of maximum light output.

F. Internal driver.

G. Nominal Operating Voltage: 120 V ac.

H. Lamp Rating: Lamp marked for outdoor use.

I. Source Limitations: Obtain luminaires from single source from a single manufacturer.

2.2 LUMINAIRE-MOUNTED PHOTOELECTRIC RELAYS

A. Comply with UL 773 or UL 773A.

2.3 MATERIALS

A. Metal Parts: Free of burrs and sharp corners and edges.

B. Doors, Frames, and Other Internal Access: Smooth operating, free of light leakage under operating conditions, and designed to permit relamping without use of tools. Designed to prevent doors, frames, lenses, diffusers, and other components from falling accidentally during relamping and when secured in operating position. Doors shall be removable for cleaning or replacing lenses.

1. Lens Thickness: At least 0.125 inch minimum unless otherwise indicated.

C. Lens and Refractor Gaskets: Use heat- and aging-resistant resilient gaskets to seal and cushion lenses and refractors in luminaire doors.

D. Housings:

1. Rigidly formed, weather- and light-tight enclosure that will not warp, sag, or deform in use.
2. Provide filter/breather for enclosed luminaires.

E. Factory-Applied Labels: Comply with UL 1598. Include recommended lamps. Labels shall be located where they will be readily visible to service personnel, but not seen from normal viewing angles when lamps are in place.

2.4 FINISHES

A. Variations in Finishes: Noticeable variations in same piece are unacceptable. Variations in appearance of adjoining components are acceptable if they are within the range of approved Samples and are assembled or installed to minimize contrast.

B. Luminaire Finish: Manufacturer's standard paint applied to factory-assembled and -tested luminaire before shipping. Where indicated, match finish process and color of support materials.

2.5 LUMINAIRE SUPPORT COMPONENTS

A. Comply with requirements in Section 260529 "Hangers and Supports for Electrical Systems" for channel and angle iron supports and nonmetallic channel and angle supports.

PART 3 - EXECUTION

3.1 EXAMINATION

A. Examine substrates, areas, and conditions, with Installer present, for compliance with requirements for installation tolerances and other conditions affecting performance of the Work.

B. Examine roughing-in for luminaire electrical conduit to verify actual locations of conduit connections before luminaire installation.

C. Examine walls for suitable conditions where luminaires will be installed.

D. Proceed with installation only after unsatisfactory conditions have been corrected.

3.2 GENERAL INSTALLATION REQUIREMENTS

A. Comply with NECA 1.

B. Use fastening methods and materials selected to resist seismic forces defined for the application and approved by manufacturer.

C. Fasten luminaire to structural support.

D. Supports:

1. Sized and rated for luminaire weight.
2. Able to maintain luminaire position after cleaning and relamping.
3. Support luminaires without causing deflection of finished surface.
4. Luminaire-mounting devices shall be capable of supporting a horizontal force of 100 percent of luminaire weight and a vertical force of 400 percent of luminaire weight.

E. Wall-Mounted Luminaire Support:

1. Attached to structural members in walls .

F. Wiring Method: Install cables in raceways. Conceal raceways and cables.

G. Install luminaires level, plumb, and square with finished grade unless otherwise indicated. Coordinate layout and installation of luminaires with other construction.

3.3 IDENTIFICATION

A. Identify system components, wiring, cabling, and terminals. Comply with requirements for identification specified in Section 260553 "Identification for Electrical Systems."

3.4 FIELD QUALITY CONTROL

A. Inspect each installed luminaire for damage. Replace damaged luminaires and components.

B. Perform the following tests and inspections:

1. Operational Test: After installing luminaires and accessories, and after electrical circuitry has been energized, test units to confirm proper operation.
2. Verify operation of photoelectric controls.

C. Luminaire will be considered defective if it does not pass tests and inspections.

D. Prepare a written report of tests, inspections, observations, and verifications indicating and interpreting results. If adjustments are made to lighting system, retest to demonstrate compliance with standards.

3.5 DEMONSTRATION

A. Train Owner's maintenance personnel to adjust, operate, and maintain luminaires and photocell relays.

3.6 ADJUSTING

A. Occupancy Adjustments: When requested within 12 months of date of Substantial Completion, provide on-site assistance in adjusting the direction of aim of luminaires to suit occupied conditions. Make up to two visits to Project during other-than-normal hours for this purpose. Some of this work may be required during hours of darkness.

1. During adjustment visits, inspect all luminaires. Replace luminaires that are defective.
2. Parts and supplies shall be manufacturer's authorized replacement parts and supplies.

END OF SECTION

SECTION 31 05 13 - SOILS

PART 1 GENERAL

1.1 SUMMARY

A. Section Includes:
   1. Subsoil materials.
   2. Topsoil materials.

B. Related Sections:
   1. Section 31 22 13 - Rough Grading.
   2. Section 32 05 16 - Aggregates.
   3. Section 32 92 19 - Seeding.

1.2 REFERENCES

A. American Association of State Highway and Transportation Officials:
   1. AASHTO T99 - Standard Specification for Moisture-Density Relations of Soils Using a 2.5 kg (5.5 lb) Rammer and a 305 mm (12 in.) Drop.

B. ASTM International:
   1. ASTM D698 - Standard Test Method for Laboratory Compaction Characteristics of Soil Using Standard Effort (12,400 ft-lbf/ft3 (600 kN-m/m3)).
   2. ASTM D1557 - Standard Test Method for Laboratory Compaction Characteristics of Soil Using Modified Effort (6,000 ft-lbf/ft3 (2,700 kN-m/m3)).
   3. ASTM D2487 - Standard Classification of Soils for Engineering Purposes (Unified Soil Classification System).

C. Illinois Department of Transportation (IDOT): Standard Specifications for Road and Bridge Construction, 2012, and all addenda. References made to compensation, method of measurement and basis of payment shall not apply.

1.3 SUBMITTALS

A. Section 01 33 00 - Submittal Procedures: Requirements for submittals.

B. Samples: Submit, in air-tight containers, a 10 pound sample of each type of fill to the Architect/Engineer.

C. Materials Source: Submit name of imported materials source.

1.4 QUALITY ASSURANCE

A. Furnish each material from single source throughout the Work.

PART 2 PRODUCTS

2.1 SUBSOIL MATERIALS

A. Subsoil: Conforming to IDOT Standard Specification Section 204.
   1. Graded.
   2. Free of lumps larger than 3 inches, rocks larger than 2 inches and debris.
   3. Soil classified as ML, CL, ML-CL, SM or SC according to ASTM D2487.

2.2 TOPSOIL MATERIALS

A. Topsoil: Conforming to IDOT Standard Specification Article 1081.05.
   1. Graded.
   2. Free of roots, rocks larger than 1/2 inch, subsoil, debris, large weeds and foreign matter.

2.3 SOURCE QUALITY CONTROL

A. Section 01 40 00 - Quality Requirements: Testing and Inspection Services and analysis of soil material.

B. Testing and Analysis of Subsoil Material: the Architect/Engineer shall perform in accordance with ASTM D698.

C. Testing and Analysis of Topsoil Material: the Architect/Engineer shall perform in accordance with ASTM D698.

D. When tests indicate materials do not meet specified requirements, change material and retest.

PART 3 EXECUTION

3.1 EXCAVATION

A. Excavate subsoil and topsoil from areas designated. Strip topsoil to full depth of topsoil in designated areas.

B. Stockpile excavated material meeting requirements for subsoil and topsoil materials.

C. Remove excess excavated subsoil and topsoil not intended for reuse, from site.

D. Remove excavated materials not meeting requirements for subsoil and topsoil materials from site.

END OF SECTION

SECTION 31 22 13 - ROUGH GRADING

PART 1 GENERAL

1.1 SUMMARY

A. Section Includes:
   1. Cutting, grading, filling, rough contouring, and compacting site.

B. Related Sections:
   1. Section 31 05 13 - Soils.
   2. Section 31 10 00 - Site Clearing.

1.2 REFERENCES

A. American Association of State Highway and Transportation Officials:
   1. AASHTO T99 - Standard Specification for Moisture-Density Relations of Soils Using a 2.5 kg (5.5 lb) Rammer and a 305 mm (12 in.) Drop.

B. ASTM International:
   1. ASTM C136 - Standard Test Method for Sieve Analysis of Fine and Coarse Aggregates.
   2. ASTM D698 - Standard Test Method for Laboratory Compaction Characteristics of Soil Using Standard Effort (12,400 ft-lbf/ft3 (600 kN-m/m3)).
   3. ASTM D1556 - Standard Test Method for Density of Soil in Place by the Sand-Cone Method.
   4. ASTM D2419 - Standard Test Method for Sand Equivalent Value of Soils and Fine Aggregate.
   5. ASTM D2434 - Standard Test Method for Permeability of Granular Soils (Constant Head).
   6. ASTM D2922 - Standard Test Method for Density of Soil and Soil-Aggregate in Place by Nuclear Methods (Shallow Depth).
   7. ASTM D3017 - Standard Test Method for Water Content of Soil and Rock in Place by Nuclear Methods (Shallow Depth).

C. Illinois Department of Transportation (IDOT): Standard Specifications for Road and Bridge Construction, 2012, and all addenda. References made to compensation, method of measurement and basis of payment shall not apply.

1.3 SUBMITTALS

A. Section 01 33 00 - Submittal Procedures: Requirements for submittals.

B. Materials Source: Submit name of imported materials suppliers.

1.4 QUALITY ASSURANCE

A. Perform Work in accordance with IDOT Standard Specification Sections 202 and 205.

PART 2 PRODUCTS

Not Used.

PART 3 EXECUTION

3.1 EXAMINATION

A. Section 01 30 00 - Administrative Requirements: Verification of existing conditions before starting work.

B. Verify survey bench mark and intended elevations for the Work are as indicated on Drawings.

3.2 PREPARATION

A. Call Local Utility Line Information service at 1-800-892-0123 not less than 48 hours before performing Work.
   1. Request underground utilities to be located and marked within and surrounding construction areas.

B. Identify required lines, levels, contours, and datum.

C. Protect utilities indicated to remain from damage.

D. Protect plant life, lawns, and other features remaining as portion of final landscaping.

E. Protect bench marks, survey control point, existing structures, fences, sidewalks, paving, and curbs from excavating equipment and vehicular traffic.

3.3 TOPSOIL EXCAVATION

A. Excavate topsoil from areas to be further excavated, relandscaped, or regraded, without mixing with foreign materials for use in finish grading.

B. Do not excavate wet topsoil.

C. Stockpile in area designated on site to depth not exceeding 8 feet and protect from erosion.

D. Remove excess topsoil not intended for reuse, from site.

3.4 SUBSOIL EXCAVATION

A. Excavate subsoil from areas to be further excavated, relandscaped, or regraded.

B. Do not excavate wet subsoil or excavate and process wet material to obtain optimum moisture content.

C. When excavating through roots, perform Work by hand and cut roots with sharp axe.

D. Remove excess subsoil not intended for reuse, from site.

E. Stockpile subsoil in area designated on site to depth not exceeding 8 feet and protect from erosion.

F. Benching Slopes: Horizontally bench existing slopes greater than 1:4 to key placed fill material to slope to provide firm bearing.

G. Stability: Replace damaged or displaced subsoil as specified for fill.

3.5 FILLING

A. Fill areas to contours and elevations with unfrozen materials.

B. Place fill material in continuous layers and compact. Refer to Specification Section 31 23 16 for additional compaction requirements.

C. Proof roll surface using pneumatic-tired equipment to expose unsuitably loose or soft subgrade.

D. Make grade changes gradual. Blend slope into level areas.

E. Repair or replace items indicated to remain damaged by excavation or filling.

3.6 TOLERANCES

A. Section 01 40 00 - Quality Requirements: Tolerances.

B. Top Surface of Subgrade: Plus or minus 0.1 feet.

END OF SECTION

SECTION 31 23 16 - EXCAVATION AND FILL

PART 1 GENERAL

1.1 SUMMARY

A. Section Includes:
1. Stockpiling topsoil and reusable subsoil.
2. Shoring and bracing for excavation.
3. Fill for over-excavation.
4. Backfilling site.

B. Related Sections:
1. Section 31 05 13 - Soils.
2. Section 31 22 13 - Rough Grading.
3. Section 31 23 17 - Trenching.

1.2 REFERENCES

A. ASTM International:
1. ASTM D698 - Standard Test Method for Laboratory Compaction Characteristics of Soil Using Standard Effort (12,400 ft-lbf/ft3 (600 kN-m/m3)).
2. ASTM D1556 - Standard Test Method for Density of Soil in Place by the Sand-Cone Method.
3. ASTM D2922 - Standard Test Method for Density of Soil and Soil-Aggregate in Place by Nuclear Methods (Shallow Depth).
4. ASTM D3017 - Standard Test Method for Water Content of Soil and Rock in Place of Nuclear Methods (Shallow Depth).
5. ASTM D4253 - Standard Test Methods for Maximum Index Density and Unit Weight of Soils Using a Vibratory Table.

B. American Association of State Highway and Transportation Officials:
1. AASHTO T99 - Standard Specification for Moisture-Density Relations of Soils Using a 2.5 kg (5.5 lb) Rammer and a 305 mm (12 in.) Drop.

C. Local utility standards when working within 24 inches of utility lines.

D. Illinois Department of Transportation (IDOT): Standard Specifications for Road and Bridge Construction, 2012, and all addenda. References made to compensation, method of measurement and basis of payment shall not apply.

1.3 SUBMITTALS

A. Section 01 33 00 - Submittal Procedures: Requirements for submittals.

B. Samples: Submit, in airtight containers, a 20 pound. sample of each type of fill material to the Architect/Engineer.

C. When recent test results are available for fill materials to be used, disregard samples submission and submit the test results to the testing laboratory. Test results shall clearly indicate material types, composition, hardness, compatibility and suitability for proposed usage.

D. Proctor samples shall be obtained at least 7 days prior to placement of fills.

E. Materials Source: Submit name of imported fill material suppliers.

PART 2 PRODUCTS

2.1 APPROVED FILL MATERIALS

A. Angular pit run crushed natural stone: Free from shale, clay, friable materials and debris. Material shall be in accordance with IDOT Standard Specification Section 1004.

B. CA-6 or CA-10 crushed stone: In accordance with IDOT Standard Specification Section 1004.

C. Select site excavated subsoil material: Meeting the requirements of Specification Section 31 05 13. The use of topsoil as backfill is not allowed.

PART 3 EXECUTION

3.1 EXAMINATION AND PREPARATION

A. Call Local Utility Line Information service at 1-800-892-0123 not less than 48 hours before performing Work.
   1. Request underground utilities to be located and marked within and surrounding construction areas.

B. Identify required lines, levels, contours, and datum.

C. Establish extent of excavation and fill areas by area and elevation. Designate and identify data elevation.

D. Protect utilities indicated to remain from damage.

E. Protect plant life, lawns, and other features remaining as portion of final landscaping.

F. Protect bench marks, survey control points, existing structures, fences, sidewalks, paving, and curbs from excavating equipment and vehicular traffic.

3.2 EXCAVATION

A. Underpin adjacent structures which may be damaged by excavation work.

B. Excavate subsoil to accommodate construction operations.

C. Compact disturbed load bearing soil in direct contact with foundations to original bearing capacity.

D. Remove lumped subsoil, boulders, and rock up to 1/3 cu yd measured by volume.

E. Notify the Architect / Engineer of unexpected subsurface conditions.

F. Correct areas over excavated as directed by the Architect / Engineer.

G. Remove excess and unsuitable material from site.

H. Stockpile subsoil in area designated on site to depth not exceeding 8 feet and protect from erosion.

I. Repair or replace items indicated to remain damaged by excavation.

3.3 EMBANKMENT

A. Backfill areas to contours and elevations with unfrozen materials.

B. Systematically backfill to allow maximum time for natural settlement. Do not backfill over porous, wet, frozen or spongy subgrade surfaces.

C. Place fill material in continuous layers and compact.
   1. Subsoil fill shall be compacted to 95% Standard Proctor Density.
   2. Aggregate fill beneath footings and pavement shall be compacted to 100% Standard Proctor Density.
   3. Aggregate fill above footing bases and below floor slabs shall be compacted to 95% or greater that Standard Proctor Density.

D. Employ placement method that does not disturb or damage other work.

E. Maintain a maximum variation of 3% from Optimum Moisture Content of backfill materials to attain the required compaction density.

F. Fill shall be placed in lifts not to exceed 6 inches in thickness.

G. Make gradual grade changes. Blend slope into level areas.

H. Remove surplus backfill materials from site.

I. Leave fill material stockpile areas free of excess fill materials.

3.4 FIELD QUALITY CONTROL

A. Request visual inspection of bearing surfaces by Architect/Engineer before installing subsequent work.

B. Laboratory testing of materials will be performed by the Architect/Engineer in accordance with ASTM D698.

C. Field compaction and moisture testing of materials will be performed by the Architect/Engineer in accordance with ASTM D698.

D. When tests indicate Work does not meet specified requirements, remove Work, replace, compact, and retest.

3.5 PROTECTION

A. Prevent displacement or loose soil from falling into excavation; maintain soil stability.

B. Protect structures, utilities and other facilities from damage caused by settlement, lateral movement, undermining, washout, and other hazards created by earth operations.

3.6 TOLERANCES

A. Top surface of excavation or embankment: Plus or minus 0.1 feet from required elevations.

3.7 SURPLUS MATERIALS

A. Remove surplus materials from site.

B. Leave stockpile areas completely free of all excess fill materials.

END OF SECTION

SECTION 31 23 17 - TRENCHING AND BACKFILL

PART 1 GENERAL

1.1 SUMMARY

A. Section Includes:
1. Excavating trenches for utilities from 5 feet outside building to utility service.
2. Compacted fill from top of utility bedding to subgrade elevations.
3. Backfilling and compaction.

B. Related Sections:
1. Section 31 05 13 - Soils.
2. Section 31 22 13 - Rough Grading.
3. Section 31 23 16 - Excavation and Fill.
4. Section 32 05 16 - Aggregates.
5. Section 32 11 23 - Aggregate Base Course.
6. Section 32 13 13 - Concrete Paving.

1.2 REFERENCES

A. American Association of State Highway and Transportation Officials:
1. AASHTO T99 - Standard Specification for Moisture-Density Relations of Soils Using a 2.5 kg (5.5 lb) Rammer and a 305 mm (12 in.) Drop.

B. ASTM International:
1. ASTM C136 - Standard Test Method for Sieve Analysis of Fine and Coarse Aggregates.
2. ASTM D698 - Standard Test Method for Laboratory Compaction Characteristics of Soil Using Standard Effort (12,400 ft-lbf/ft3 (600 kN-m/m3)).
3. ASTM D1556 - Standard Test Method for Density of Soil in Place by the Sand-Cone Method.
4. ASTM D2321 - Standard Practice for Underground Installation of Thermoplastic Pipe for Sewers and Other Gravity-Flow Applications.
5. ASTM D2922 - Standard Test Method for Density of Soil and Soil-Aggregate in Place by Nuclear Methods (Shallow Depth).
6. ASTM D3017 - Standard Test Method for Water Content of Soil and Rock in Place by Nuclear Methods (Shallow Depth).

1.3 DEFINITIONS

A. Utility: Any buried pipe, duct, conduit, or cable.

1.4 SUBMITTALS

A. Section 01 33 00 - Submittal Procedures: Requirements for submittals.

B. Excavation Protection Plan: Describe sheeting, shoring, and bracing materials and installation required to protect excavations and adjacent structures and property; include structural calculations to support plan.

C. Product Data: Submit data for geotextile fabric indicating fabric and construction.

D. Samples: Submit, in air-tight containers, 25 lb. sample of each type of fill to the Architect/Engineer.

E. Materials Source: Submit name of imported fill materials suppliers.

1.5 QUALIFICATIONS

A. Prepare excavation protection plan under direct supervision of Professional Engineer experienced in design of this Work and licensed in the State of Illinois.

1.6 FIELD MEASUREMENTS

A. Verify field measurements prior to fabrication.

1.7 COORDINATION

A. Section 01 30 00 - Administrative Requirements: Coordination and project conditions.

B. Verify Work associated with lower elevation utilities is complete before placing higher elevation utilities.

PART 2 PRODUCTS

2.1 FILL MATERIALS

A. Subsoil Fill: As specified in Section 31 05 13.

B. Granular Fill: As specified in Section 32 05 16.

C. Concrete: As specified in Section 32 13 13.

PART 3 EXECUTION

3.1 LINES AND GRADES

A. Lay pipes to lines and grades indicated on Drawings.
   1. The Architect / Engineer reserves right to make changes in lines, grades, and depths of utilities when changes are required for Project conditions.

B. Use laser-beam instrument with qualified operator to establish lines and grades.

3.2 PREPARATION

A. Call Local Utility Line Information service at 1-800-892-0123, not less than 48 hours before performing Work.
   1. Request underground utilities to be located and marked within and surrounding construction areas.

B. Identify required lines, levels, contours, and datum locations.

C. Protect plant life, lawns, and other features remaining as portion of final landscaping.

D. Protect bench marks, existing structures, fences, sidewalks, paving, and curbs from excavating equipment and vehicular traffic.

E. Maintain and protect above and below grade utilities indicated to remain.

F. Establish temporary traffic control and detours when trenching is performed in public right-of-way. Relocate controls and reroute traffic as required during progress of Work.

3.3 TRENCHING

A. Excavate subsoil required for utilities to utility service.

B. Perform excavation within 24 inches of existing utility service in accordance with utility's requirements.

C. Do not advance open trench more than 40 feet ahead of installed pipe.

D. Cut trenches sufficiently wide to enable installation and allow inspection. Remove water or materials that interfere with Work.

E. Excavate bottom of trenches a maximum of 2 feet wider than outside diameter of pipe.

F. Excavate trenches to depth indicated on Drawings. Provide uniform and continuous bearing and support for bedding material and utilities.

G. Do not interfere with 45 degree bearing splay of foundations.

H. When Project conditions permit, slope side walls of excavation starting 2 feet above top of pipe. When side walls can not be sloped, provide sheeting and shoring to protect excavation as specified in this section.

I. When subsurface materials at bottom of trench are loose or soft, excavate to greater depth as directed by the Architect / Engineer until suitable material is encountered.

J. Cut out soft areas of subgrade not capable of proper compaction. Backfill with appropriate fill and compact to density equal to or greater than requirements for subsequent backfill material.

K. Trim excavation. Hand trim for bell and spigot pipe joints. Remove loose matter.

L. Correct overexcavated areas with compacted backfill as specified for excavation or replace with concrete as directed by the Architect / Engineer.

M. Remove excess subsoil, not intended for reuse, from site.

N. Stockpile subsoil in designated areas on site to a depth not exceeding 8 feet and protect from erosion.

3.4 SHEETING AND SHORING

A. Sheet, shore, and brace excavations to prevent danger to persons, structures and adjacent properties and to prevent caving, erosion, and loss of surrounding subsoil.

B. Support trenches more than 5 feet deep excavated through unstable, loose, or soft material. Provide sheeting, shoring, bracing, or other protection to maintain stability of excavation.

C. Design sheeting and shoring to be removed at completion of excavation work.

D. Repair damage caused by failure of the sheeting, shoring, or bracing and for settlement of filled excavations or adjacent soil.

E. Repair damage to new and existing Work from settlement, water or earth pressure or other causes resulting from inadequate sheeting, shoring, or bracing.

F. Sheeting, shoring and bracing activities shall be performed in accordance with applicable Occupational Safety and Health (OSHA) rules and regulations.

3.5 BEDDING

A. Refer to Specification Section 32 05 16 for aggregates specified for use as bedding material.

B. Bedding shall be in accordance with ASTM D2321. Bedding class shall be determined by the bedding material used.

3.6 BACKFILLING

A. Granular backfill shall be used to backfill trenches under existing or proposed improved surfaces.

B. Backfill trenches to contours and elevations with unfrozen fill materials.

C. Systematically backfill to allow maximum time for natural settlement. Do not backfill over porous, wet, frozen, or spongy subgrade surfaces.

D. Place fill in continuous layers and compact.
   1. Compactive effort shall be applied to fine aggregate and subsoil fill to the satisfaction of the Architect / Engineer.
   2. Coarse aggregate fill not located beneath footings or pavement shall be compacted to 95% Standard Proctor density.

E. Maintain a maximum variation of 3% from optimum moisture content of backfill materials to attain the required compaction density.

F. Place filter fabric prior to placing subsequent fill materials.

G. Place fill material in continuous layers and compact.

H. Employ placement method that does not disturb or damage foundation perimeter drainage and utilities in trench.

I. Do not leave more than 40 feet of trench open at end of working day.

J. Protect open trench to prevent danger to the public.

3.7 TOLERANCES

A. Section 01 40 00 - Quality Requirements: Tolerances.

B. Top Surface of Backfilling Under Paved Areas: Plus or minus 1 inch from required elevations.

C. Top Surface of General Backfilling: Plus or minus 1 inch from required elevations.

3.8 FIELD QUALITY CONTROL

A. Section 01 40 00 - Quality Requirements: Field inspecting, testing, adjusting, and balancing.

B. Laboratory testing of materials will be performed by the Architect/Engineer in accordance with ASTM D698.

C. Field compaction and moisture testing of materials will be performed by the Architect/Engineer in accordance with ASTM D698.

D. When tests indicate Work does not meet specified requirements, remove Work, replace, compact, and retest.

3.9 PROTECTION OF FINISHED WORK

A. Section 01 70 00 - Execution and Closeout Requirements: Protecting finished work.

B. Reshape and re-compact fills subjected to vehicular traffic during construction.

END OF SECTION

SECTION 32 05 16 - AGGREGATES

PART 1 GENERAL

1.1 SUMMARY

A. Section Includes:
   1. Coarse aggregate materials.
   2. Fine aggregate materials.

B. Related Sections:
   1. Section 31 22 13 - Rough Grading.
   2. Section 32 11 23 - Aggregate Base Course.

1.2 REFERENCES

A. American Association of State Highway and Transportation Officials:
   1. AASHTO M147 - Standard Specification for Materials for Aggregate and Soil-Aggregate Subbase, Base and Surface Courses.
   2. AASHTO T99 - Standard Specification for Moisture-Density Relations of Soils Using a 2.5 kg (5.5 lb) Rammer and a 305 mm (12 in.) Drop.

B. ASTM International:
   1. ASTM C136 - Standard Test Method for Sieve Analysis of Fine and Coarse Aggregates.
   2. ASTM D698 - Standard Test Method for Laboratory Compaction Characteristics of Soil Using Standard Effort (12,400 ft-lbf/ft3 (600 kN-m/m3)).
   3. ASTM D2487 - Standard Classification of Soils for Engineering Purposes (Unified Soil Classification System).
   4. ASTM D4318 - Standard Test Method for Liquid Limit, Plastic Limit, and Plasticity Index of Soils.

C. Illinois Department of Transportation (IDOT): Standard Specifications for Road and Bridge Construction, 2012, and all addenda. References made to compensation, method of measurement and basis of payment shall not apply.

1.3 SUBMITTALS

A. Section 01 33 00 - Submittal Procedures: Requirements for submittals.

B. Samples: Submit, in air-tight containers, a 25 pound sample of each type of aggregate fill to the Architect/Engineer.

C. Materials Source: Submit name of imported materials suppliers.

D. Manufacturer's Certificate: Certify aggregate suppliers are IDOT approved.

1.4 QUALITY ASSURANCE

A. Furnish each aggregate material from single source throughout the Work.

PART 2 PRODUCTS

2.1 COARSE AGGREGATE MATERIALS

A. All coarse aggregates used to complete the Work shall conform to IDOT Standard Specification Section 1004.

2.2 FINE AGGREGATE MATERIALS

A. All fine aggregate used to complete the Work shall conform to IDOT Standard Specification Section 1003.

2.3 SOURCE QUALITY CONTROL

A. Section 01 40 00 - Quality Requirements: Testing and inspection services.

B. Testing and Analysis of Coarse Aggregate Material: the Architect/Engineer shall perform in accordance with ASTM D698.

C. Testing and Analysis of Fine Aggregate Material: the Architect/Engineer shall perform in accordance with ASTM D698.

D. When tests indicate materials do not meet specified requirements, change material and retest.

PART 3 EXECUTION

3.1 COARSE AGGREGATE

A. Granular Subbase Material: CA-6 or CA-10; Place in accordance with IDOT Standard Specification Section 311.

B. Aggregate Base: CA-6 or CA-10; Place in accordance with IDOT Standard Specification Section 351.

C. Trench Bedding and/or Backfill: CA-7; Place in accordance with Specification Section 31 23 17.

3.2 FINE AGGREGATE

A. Trench Bedding and/or Backfill: FA-1, FA-2, FA-6 or FA-21; Place in accordance with Specification Section 31 23 17.

3.3 STOCKPILING

A. If necessary, stockpile materials on site at locations indicated by the Architect / Engineer.

B. Stockpile in sufficient quantities to meet Project schedule and requirements.

C. Separate different aggregate materials with dividers or stockpile individually to prevent mixing.

D. Direct surface water away from stockpile site to prevent erosion or deterioration of materials.

3.4 STOCKPILE CLEANUP

A. Remove stockpile, leave area in clean and neat condition. Grade site surface to prevent free standing surface water.

END OF SECTION

SECTION 32 11 23 - AGGREGATE BASE COURSE

PART 1 GENERAL

1.1 SUMMARY

A. Section Includes:
   1. Granular subbase.
   2. Aggregate base course.

B. Related Sections:
   1. Section 31 22 13 - Rough Grading.
   2. Section 32 05 16 - Aggregates.
   3. Section 32 13 13 - Concrete Paving.

1.2 REFERENCES

A. American Association of State Highway and Transportation Officials:
   1. AASHTO M288 - Standard Specification for Geotextile Specification for Highway Applications.
   2. AASHTO T99 - Standard Specification for Moisture-Density Relations of Soils Using a 2.5 kg (5.5 lb) Rammer and a 305 mm (12 in.) Drop.

B. ASTM International:
   1. ASTM D698 - Standard Test Method for Laboratory Compaction Characteristics of Soil Using Standard Effort (12,400 ft-lbf/ft3 (600 kN-m/m3)).
   2. ASTM D1556 - Standard Test Method for Density of Soil in Place by the Sand-Cone Method.
   3. ASTM D2922 - Standard Test Method for Density of Soil and Soil-Aggregate in Place by Nuclear Methods (Shallow Depth).
   4. ASTM D2940 - Standard Specification for Graded Aggregate Material For Bases or Subbases for Highways or Airports.
   5. ASTM D3017 - Standard Test Method for Water Content of Soil and Rock in Place by Nuclear Methods (Shallow Depth).

C. Illinois Department of Transportation (IDOT): Standard Specifications for Road and Bridge Construction, 2012, and all addenda. References made to compensation, method of measurement and basis of payment shall not apply.

1.3 SUBMITTALS

A. Section 01 33 00 - Submittal Procedures: Requirements for submittals.

B. Samples: Submit, in air-tight containers, a 25 pound sample of each type of aggregate fill to the Architect/Engineer.

C. Materials Source: Submit name of aggregate materials suppliers.

D. Manufacturer's Certificate: Certify aggregate suppliers are IDOT approved.

1.4 QUALITY ASSURANCE

A. Furnish each aggregate material from single source throughout the Work.

PART 2 PRODUCTS

2.1 AGGREGATE MATERIALS

A. Coarse Aggregates: As specified in Section 32 05 16.

2.2 SOURCE QUALITY CONTROL

A. Testing of Aggregates shall be as specified in Section 32 05 16.

PART 3 EXECUTION

3.1 EXAMINATION

A. Section 01 30 00 - Administrative Requirements: Verification of existing conditions before starting work.

B. Verify compacted substrate is dry and ready to support paving and imposed loads.

C. Verify substrate has been inspected, gradients and elevations are correct.

3.2 PREPARATION

A. Correct irregularities in substrate gradient and elevation by scarifying, reshaping, and re-compacting.

B. Do not place fill on soft, muddy, or frozen surfaces.

C. Prepare subgrade in accordance with IDOT Standard Specification Section 301 prior to placement of aggregate base course.

3.3 AGGREGATE PLACEMENT

A. Aggregate Base: Place in accordance with IDOT Standard Specification Section 351.

B. Granular Subbase: Place in accordance with IDOT Standard Specification Section 311.

C. Level and contour surfaces to elevations, profiles, and gradients indicated.

D. Place coarse aggregate in continuous layers and compact. Fill shall be compacted to 95% standard Proctor density.

E. Maintain a maximum variation of 3% from Optimum Moisture Content of backfill materials to attain the required compaction density.

F. Use mechanical tamping equipment in areas inaccessible to compaction equipment.

3.4 TOLERANCES

A. Section 01 40 00 - Quality Requirements: Tolerances.

B. Maximum Variation From Flat Surface: 1/4 inch measured with 10 foot straight edge.

C. Maximum Variation From Thickness: 1/4 inch.

D. Maximum Variation From Elevation: 1/2 inch.

3.5 FIELD QUALITY CONTROL

A. Field compaction and moisture testing of materials will be performed by the Architect/Engineer in accordance with ASTM D698.

B. When tests indicate Work does not meet specified requirements, remove Work, replace and retest.

END OF SECTION

SECTION 32 12 22 - JOINT SEALING

PART 1 GENERAL

1.1 SUMMARY

A. Section Includes:
   1. Cleaning and sealing of joints for concrete pavement.

B. Related Sections:
   1. Section 32 13 13 - Concrete Paving.

1.2 REFERENCES

A. Illinois Department of Transportation (IDOT): Standard Specifications for Road and Bridge Construction, 2012, and all addenda. References made to compensation, method of measurement and basis of payment shall not apply.

1.3 SUBMITTALS

A. Section 01 33 00 - Submittal Procedures: Requirements for submittals.

B. Product Data: Submit manufacturer's product data, including recommended application rate and mixing instructions.

1.4 DELIVERY, STORAGE AND HANDLING

A. Joint Sealer: Deliver joint sealer in manufacturer's original, unopened, undamaged containers and packaging. Store in dry conditions and keep packaging sealed until ready for use.

PART 2 PRODUCTS

2.1 JOINT SEALER

A. Joint sealer shall be in accordance with IDOT Standard Specification Section 1050.

B. Backer rod:
   1. Closed-cell, plastic-foam, heat resistant, chemically inert, waterproof rod compatible with the sealant used.
   2. 1/8 inch wider in diameter than the joint it will be placed in.

PART 3 EXECUTION

3.1 EXAMINATION

A. Section 01 30 00 - Administrative Requirements: Verification of existing conditions before starting work.

B. Verify joints to be sealed are clean, dry, and blown free of loose foreign material prior to sealant placement.

C. Do not place joint sealer when surface temperature is outside of the Manufacturer's recommended range.

3.2 QUALITY CONTROL

A. Crack cleaning and sealing shall be in accordance with IDOT Standard Specification Section 452.

3.3 PREPARATION

A. Dust and debris shall be blown from the joint or crack with a power blower or compressed air immediately ahead of sealer placement. When compressed air is used, the minimum operating air pressure shall be 90 PSI.

B. Joints shall be routed or sawed as necessary to dislodge foreign materials and/or to enlarge existing cracks to a sufficient width to allow penetration of joint sealer. If sawing or routing is necessary, joints shall be opened to a minimum width and depth of approximately 3/4 inch.

3.4 PLACING JOINT SEALER

A. Sealant shall be continuously and mechanically agitated during heating when hot-poured joint sealer is used.

B. The sealed crack shall be filled flush with the pavement surface. Under-filling of joints will not be permitted.

C. Backer rod may be used to control the depth of sealant placed as approved by the Architect / Engineer. The minimum depth of placed sealant shall be 3/4 inch.

END OF SECTION

SECTION 32 13 13 - CONCRETE PAVING

PART 1 GENERAL

1.1 SUMMARY

A. Section Includes:
   1. Concrete paving.

B. Related Sections:
   1. Section 31 22 13 - Rough Grading.
   2. Section 32 11 23 - Aggregate Base Course.

1.2 REFERENCES

A. American Association of State Highway and Transportation Officials:
   1. AASHTO M194 - Standard Specification for Chemical Admixtures for Concrete.
   2. AASHTO M324 - Standard Specification for Joint and Crack Sealants, Hot Applied, for Concrete and Asphalt Pavements.

B. American Concrete Institute:
   1. ACI 301 - Specifications for Structural Concrete.
   2. ACI 304 - Guide for Measuring, Mixing, Transporting, and Placing Concrete.

C. ASTM International:
   1. ASTM A184/A184M - Standard Specification for Fabricated Deformed Steel Bar Mats for Concrete Reinforcement.
   2. ASTM A185 - Standard Specification for Steel Welded Wire Fabric, Plain, for Concrete Reinforcement.
   3. ASTM A497 - Standard Specification for Steel Welded Wire Fabric, Deformed, for Concrete Reinforcement.
   4. ASTM A615/A615M - Standard Specification for Deformed and Plain Billet-Steel Bars for Concrete Reinforcement.
   5. ASTM A706/A706M - Standard Specification for Low-Alloy Steel Deformed and Plain Bars for Concrete Reinforcement.
   6. ASTM A767/A767M - Standard Specification for Zinc-Coated (Galvanized) Steel Bars for Concrete Reinforcement.
   7. ASTM A775/A775M - Standard Specification for Epoxy-Coated Reinforcing Steel Bars.
   8. ASTM A884/A884M - Standard Specification for Epoxy-Coated Steel Wire and Welded Wire Fabric for Reinforcement.
   9. ASTM A934/A934M - Standard Specification for Epoxy-Coated Prefabricated Steel Reinforcing Bars.
   10. ASTM C31/C31M - Standard Practice for Making and Curing Concrete Test Specimens in the Field.
   11. ASTM C33 - Standard Specification for Concrete Aggregates.
   12. ASTM C39 - Standard Test Method for Compressive Strength of Cylindrical Concrete Specimens.

13. ASTM C94/C94M - Standard Specification for Ready-Mixed Concrete.
14. ASTM C143/C143M - Standard Test Method for Slump of Hydraulic Cement Concrete.
15. ASTM C150 - Standard Specification for Portland Cement.
16. ASTM C172 - Standard Practice for Sampling Freshly Mixed Concrete.
17. ASTM C173/C173M - Standard Test Method for Air Content of Freshly Mixed Concrete by the Volumetric Method.
18. ASTM C231 - Standard Test Method for Air Content of Freshly Mixed Concrete by the Pressure Method.
19. ASTM C260 - Standard Specification for Air-Entraining Admixtures for Concrete.
20. ASTM C309 - Standard Specification for Liquid Membrane-Forming Compounds for Curing Concrete.
21. ASTM C494/C494M - Standard Specification for Chemical Admixtures for Concrete.
22. ASTM C595 - Standard Specification for Blended Hydraulic Cements.
23. ASTM C618 - Standard Specification for Coal Fly Ash and Raw or Calcined Natural Pozzolan for Use as a Mineral Admixture in Concrete.
24. ASTM C979 - Standard Specification for Pigments for Integrally Colored Concrete.
25. ASTM C989 - Standard Specification for Ground Granulated Blast-Furnace Slag for Use in Concrete and Mortars.
26. ASTM C1017/C1017M - Standard Specification for Chemical Admixtures for Use in Producing Flowing Concrete.
27. ASTM C1064/C1064M - Standard Test Method for Temperature of Freshly Mixed Hydraulic-Cement Concrete.
28. ASTM C1116 - Standard Specification for Fiber-Reinforced Concrete and Shotcrete.
29. ASTM C1315 - Standard Specification for Liquid Membrane-Forming Compounds Having Special Properties for Curing and Sealing Concrete.
30. ASTM C1371 - Standard Test Method for Determination of Emittance of Materials Near Room Temperature Using Portable Emissometers.
31. ASTM C1549 - Standard Test Method for Determination of Solar Reflectance Near Ambient Temperature Using a Portable Solar Reflectometer.
32. ASTM D1751 - Standard Specification for Preformed Expansion Joint Filler for Concrete Paving and Structural Construction (Nonextruding and Resilient Bituminous Types).
33. ASTM D1752 - Standard Specification for Preformed Sponge Rubber and Cork Expansion Joint Fillers for Concrete Paving and Structural Construction.
34. ASTM D6690 - Standard Specification for Joint and Crack Sealants, Hot Applied, for Concrete and Asphalt Pavements.
35. ASTM E408 - Standard Test Methods for Total Normal Emittance of Surfaces Using Inspection-Meter Techniques.
36. ASTM E903 - Standard Test Method for Solar Absorptance, Reflectance, and Transmittance of Materials Using Integrating Spheres.

D. Illinois Department of Transportation (IDOT): Standard Specifications for Road and Bridge Construction, 2012, and all addenda. References made to compensation, method of measurement and basis of payment shall not apply.

1.3 SUBMITTALS

A. Section 01 33 00 - Submittal Procedures: Requirements for submittals.

B. Product Data:
1. Concrete: Submit data on concrete materials, joint filler, admixtures and curing compounds.

C. Design Data:
1. Submit concrete mix design for each concrete strength. Submit separate mix designs when admixtures are required for the following:
a. Hot and cold weather concrete work.
2. Identify mix ingredients and proportions, including admixtures.
3. Identify chloride content of admixtures and whether or not chloride was added during manufacture.
4. Concrete design mix shall be in accordance with IDOT Standard Specification Section 1020.
5. Concrete shall have a minimum compressive strength of 3500 PSI at 14 days.
6. Concrete shall be of the class specified in Table 1 of IDOT Standard Specification Section 1020 for the use specified.

1.4 QUALITY ASSURANCE

A. Perform Work in accordance with ACI 301.

B. Obtain cementitious materials from same source throughout.

1.5 QUALIFICATIONS

A. Manufacturer: Company specializing in manufacturing Products specified in this section with minimum three years experience.

B. Installer: Company specializing in performing work of this section with minimum three years experience.

1.6 ENVIRONMENTAL REQUIREMENTS

A. Do not place concrete when base surface temperature is less than 40 degrees F, or surface is wet or frozen.

PART 2 PRODUCTS

2.1 BASE MATERIAL

A. Subbase Granular Material: Meeting the requirements of Specification Section 32 05 16.

2.2 FORM MATERIALS

A. Form Materials: In accordance with IDOT Standard Specification Article 1103.05.

2.3 REINFORCING

A. Reinforcement Bars: In accordance with IDOT Standard Specification Article 1006.10.

B. Welded Wire Fabric: In accordance with IDOT Standard Specification Section 1006.10.

2.4 CONCRETE MATERIALS

A. Portland Cement: In accordance with IDOT Standard Specification Section 1001.

B. Water: In accordance with IDOT Standard Specification Section 1002.

C. Fine Aggregate: In accordance with IDOT Standard Specification Section 1003.

D. Coarse Aggregate: In accordance with IDOT Standard Specification Section 1004.

E. Admixtures: In accordance with IDOT Standard Specification Section 1021. No Calcium Chloride shall be entrained into mixtures to be used for concrete pavements.

2.5 ADMIXTURES

A. Concrete Admixtures: In accordance with IDOT Standard Specification Section 1021. Air-entrained agents shall conform to ASTM C260. No Calcium Chloride shall be entrained into mixtures to be used for concrete pavements.

2.6 ACCESSORIES

A. Curing Compound: ASTM C309, Type 1, Class A.

B. Joint Sealer: In accordance with IDOT Standard Specification Section 1050.

C. Expansion Joint: Preformed bituminous expansion joint filler in accordance with IDOT Standard Specification Article 1051.03.

2.7 SOURCE QUALITY CONTROL AND TESTS

A. Section 01 40 00 - Quality Requirements: Testing and Inspection Services.

B. Submit proposed mix design of each class of concrete to the Architect / Engineer for review prior to commencement of Work.

C. Tests on cement, aggregates, and mixes will be performed by the Architect/Engineer to ensure conformance with specified requirements. Samples will be tested in accordance with ACI 301.

D. Concrete shall be Ready-Mixed and delivered in accordance with ASTM C94.

PART 3 EXECUTION

3.1 EXAMINATION

A. Section 01 30 00 - Administrative Requirements: Verification of existing conditions before starting work.

B. Verify compacted subgrade is dry and ready to support paving and imposed loads.

C. Verify gradients and elevations of base are correct.

D. Do not place concrete when base surface temperature is less than 40 degrees F, or surface is wet or frozen.

3.2 SUBBASE

A. Granular Subbase: Install in accordance with IDOT Standard Specification Section 311.

3.3 PREPARATION

A. Moisten substrate to minimize absorption of water from fresh concrete.

B. Notify the Construction Manager a minimum 24 hours prior to commencement of concreting operations.

3.4 FORMING

A. Place and secure forms and screeds to correct location, dimension, profile, and gradient.

B. Assemble formwork to permit easy stripping and dismantling without damaging concrete.

3.5 REINFORCEMENT BARS AND WELDED WIRE FABRIC REINFORCING

A. Place reinforcing as indicated on Drawings.

B. Interrupt reinforcing at contraction and expansion joints.

C. Place reinforcing to achieve paving alignment as detailed.

3.7 PLACING CONCRETE

A. Concrete design mix shall meet the requirements of IDOT Standard Specification 1020.

B. PCC Sidewalk: Sidewalk shall be placed in accordance with IDOT Standard Specification Section 424.

C. Ensure reinforcing, inserts, embedded parts and preformed expansion joints are not disturbed during concrete placement.

D. Excessive "pushing" of concrete from one area to another is prohibited. Do not use the vibrator to transport concrete inside the forms. Concrete shall not be allowed to drop freely more than five (5) feet.

E. Place concrete at such a rate that it is plastic, flows readily and mixes well with previous layers. Do not vibrate excessively in one location. Place concrete continuously over the full width of the panel and between predetermined construction joints. Do not break or interrupt successive pours such that cold joints occur.

3.8 JOINTS

A. Place expansion and contraction joints as shown in the drawings.

B. Place joint filler between paving components and buildings or other appurtenances. Recess top of filler 1/4 inch for joint sealant installation.

C. Saw cut contraction joints 3/16 inch wide at an optimum time after finishing. Cut into slab to a depth of 1/3 of its thickness.

3.9 FINISHING

A. Paving: Light broom, radius to 1/8 inch radius, and trowel joint edges.

B. Direction of Texturing: Transverse to paving direction.

C. Place curing compound and/or sealer on exposed concrete surfaces immediately after finishing.

3.10 CURING AND PROTECTION

A. Immediately after placement, protect concrete from premature drying, excessively hot or cold temperatures, and mechanical injury.

B. Maintain concrete with minimal moisture loss at relatively constant temperature for period necessary for hydration of cement and hardening of concrete.

C. Do not permit pedestrian or vehicular traffic on pavement until 75 percent design strength of concrete has been achieved.

3.11 JOINT SEALING

A. Seal joints in accordance with Specification Section 32 12 22.

B. Separate pavement from vertical surfaces with ½ inch thick joint filler.

C. Set joint filler top to required elevations. Secure to resist movement by wet concrete.

3.12 CLEANING AND REPAIRING CONCRETE

A. Contractor is responsible for protecting all concrete until fully cured. Contractor is responsible for replacing damaged sections at his/her own expense if vandalism occurs during the curing process.

B. Voids and gravel pockets shall be repaired as directed by the Architect / Engineer.

3.13 ERECTION TOLERANCES

A. Section 01 40 00 - Quality Requirements: Tolerances.

B. Maximum Variation of Surface Flatness: 1/4 inch in 10 ft.

C. Maximum Variation From True Position: 1/4 inch.

3.14 FIELD QUALITY CONTROL

A. Section 01 40 00 – Quality Requirements: Field inspecting, testing, adjusting, and balancing.

B. Perform field testing in accordance with ACI 301.

C. Inspect reinforcing placement for size, spacing, location, support.

D. Architect/Engineer will take cylinders and perform slump and air entrainment tests in accordance with ACI 301 and Section 1020 of the IDOT Standard Specifications.

END OF SECTION

SECTION 32 92 19 - SEEDING

PART 1 GENERAL

1.1 SUMMARY

A. Section Includes:
   1. Fertilizing.
   2. Seeding.
   3. Mulching.
   4. Maintenance.

B. Related Sections:
   1. Section 31 22 13 - Rough Grading.
   2. Section 31 23 16 - Excavation and Fill.
   3. Section 32 05 13 - Soils.
   4. Section 31 23 17 - Trenching and Backfill.

1.2 REFERENCES

A. ASTM International:
   1. ASTM C602 - Standard Specification for Agricultural Liming Materials.

B. Illinois Department of Transportation (IDOT): Standard Specifications for Road and Bridge Construction, 2012, and all addenda. References made to compensation, method of measurement and basis of payment shall not apply.

1.3 DEFINITIONS

A. Weeds: Vegetative species other than specified species to be established in given area.

1.4 SUBMITTALS

A. Section 01 33 00 - Submittal Procedures: Requirements for submittals.

B. Product Data: Submit data for seed mix, fertilizer, mulch, and other accessories.

C. Manufacturer's Certificate: Certify Products meet or exceed specified requirements.

1.5 FINAL ACCEPTANCE

A. Final inspection and acceptance will be at the end of the turf establishment period. Acceptance shall be based upon a satisfactory stand of turf defined as 95 percent ground cover of species established.

B. Reestablish turf in areas that do not have 95 percent ground cover of the established species. Repair rejected areas of turf within acceptable planting dates as directed by the Architect / Engineer.

C. Upon seeded areas acceptance, submit written maintenance instructions recommending procedures for maintenance of seeded areas.

1.6 QUALITY ASSURANCE

A. Provide seed mixture in containers showing percentage of seed mix, germination percentage, inert matter percentage, weed percentage, year of production, net weight, date of packaging, and location of packaging.

B. Work shall be performed by a landscape contractor with a minimum of 5 years of full-time experience in the work specified and with workers skilled in the work specified.

1.7 DELIVERY, STORAGE, AND HANDLING

A. Section 01 60 00 - Product Requirements: Product storage and handling requirements.

B. Deliver grass seed mixture in sealed containers. Seed in damaged packaging is not acceptable.

C. Deliver fertilizer in waterproof bags showing weight, chemical analysis, and name of manufacturer.

D. Store all products off the ground, in a dry location, out of the way of construction operations. Provide protection to prevent damage until installed.

1.8 MAINTENANCE SERVICE

A. Section 01 70 00 - Execution and Closeout Requirements: Requirements for maintenance service.

B. Maintenance of installed and <u>accepted</u> seeded areas will be performed by Owner.

C. Maintain seeded lawn areas, including watering, spot weeding, mowing, applications of herbicides, fungicides, insecticides and re-seeding until a full, uniform stand of grass free of weeds, undesirable grass species, disease, and insects is achieved and accepted.
   1. Water daily to maintain adequate surface soil moisture for proper seed germination. Continue daily watering for not less than 30 days. Thereafter, apply ½ inch of water twice weekly until acceptance.
   2. Repair, rework, and re-seed all areas that have washed out, are eroded, or do not catch.
   3. Mow lawn areas as soon as lawn top growth reaches a 3 inch height. Cut back 2 inches in height. Repeat mowing as required to maintain specified height.
   4. Apply Type B fertilizer to lawns approximately 30 days after seeding at a rate equal to 1.0 pound. Of actual nitrogen per 1,000 square feet. (140 pounds/acre). Apply with mechanical rotary or drop type distributor. Thoroughly water into soil.

1.9 WARRANTY

A. Contractor's Warranty: Supply Owner with warranty in accordance with General Conditions for a period of one year plus one growing season.

PART 2 PRODUCTS

2.1 SEED MIXTURE

A. Seed shall be in accordance with IDOT Standard Specification Article 1081.04.

B. Seed mix shall be a Class 1 lawn mixture in accordance with IDOT Standard Specification Article 250.07.

2.2 ACCESSORIES

A. Mulching Material: In accordance with IDOT Standard Specification Article 1081.06.

B. Fertilizer: In accordance with IDOT Standard Specification Article 1081.08.

C. Lime: Agricultural ground limestone in accordance with IDOT Standard Specification Article 1081.07.

D. Water: Clean, fresh and free of substances or matter capable of inhibiting vigorous growth of grass.

E. Erosion Fabric: In accordance with IDOT Standard Specification Article 1081.15.

F. Stakes: Softwood lumber, chisel pointed.

G. String: Inorganic fiber.

2.3 SOURCE QUALITY CONTROL

A. Section 01 40 00 - Quality Requirements: Testing, inspection and analysis requirements.

PART 3 EXECUTION

3.1 EXAMINATION

A. Section 01 30 00 - Administrative Requirements: Verification of existing conditions before starting work.

B. Verify prepared soil base is ready to receive the Work of this section. Do not start seeding Work until unsatisfactory conditions are corrected.

3.2 FERTILIZING

A. Apply fertilizer in accordance with IDOT Standard Specification Article 250.04.

B. Apply lime at application rate recommended by soil analysis. Work lime into top 6 inches of soil.

C. Apply each fertilizer at the rate of 90 pounds/acre.

D. Apply after smooth raking of topsoil and prior to roller compaction.

E. Do not apply fertilizer at same time or with same machine used to apply seed.

F. Lightly water soil to aid dissipation of fertilizer. Irrigate top level of soil uniformly.

3.3 SEEDING

A. Apply seed in accordance with IDOT Standard Specification Section 250.

B. Do not seed areas in excess of that which can be mulched on same day.

C. Do not sow immediately following rain, when ground is too dry, or when winds are over 12 miles per hour.

D. Immediately following seeding, apply mulch in accordance with IDOT Standard Specification Section 251. Mulch Method 1 shall be used.

E. Apply water with fine spray immediately after each area has been mulched. Saturate to 4 inches of soil.

3.4 REPAIR OF SEEDING

A. The Contractor is responsible for the proper care of the seeded areas during the period when the vegetation is being established. If, at any time before completion and acceptance of the entire work covered by this contract, any portion of the surface becomes eroded, gullied or otherwise damaged or vandalized following seeding; has been winter-killed or otherwise destroyed, the affected portion shall be repaired to re-establish the condition and grade of the soil and reseed the areas as specified herein to attain established turf.

3.5 SEED PROTECTION

A. Cover seeded slopes where grade is 4:1 or greater when matting. Roll erosion control blanket down over slopes without stretching or pulling.

B. Lay erosion control blanket smoothly on soil surface, burying top end of each section in narrow 6 inch trench. Leave 12 inch overlap from top roll over bottom roll. Leave 4 inch overlap over adjacent section.

C. Staple outside edges and overlaps at 36 inch intervals.

D. Lightly dress slopes with topsoil to ensure close contact between matting and soil.

E. In ditches, unroll matting in direction of flow. Overlap end of strips six inch with upstream section on top.

3.6 MAINTENANCE

A. Mow grass at regular intervals to maintain at maximum height of 3 inches. Do not cut more than 1/3 of grass blade at each mowing. Perform first mowing when seedlings are 40 percent higher than desired height.

B. Neatly trim edges and hand clip where necessary.

C. Immediately remove clippings after mowing and trimming. Do not let clippings lay in clumps.

D. Water to prevent grass and soil from drying out.

E. Control growth of weeds. Apply herbicides. Remedy damage resulting from improper use of herbicides.

F. Immediately reseed areas showing bare spots.

G. Repair washouts or gullies.

H. Protect seeded areas with warning signs during maintenance period.

3.7 ACCEPTANCE

A. Inspection to determine acceptance of seeded lawns will be made after 60 days of completed installation upon Contractor's request. Provide notification at least ten working days before requested inspection date.
   1. Seeded areas will be acceptable provided all requirements, including maintenance, have been complied with, and a healthy, uniform, close stand of specified grass is established free of weeds, undesirable grass species, disease, and insects.
   2. No individual lawn areas shall have bare spots or unacceptable cover totaling more than two percent of the individual areas, in areas requested to be inspected.

B. Upon acceptance, Owner will assume lawn maintenance.

3.8 CLEANING

A. Perform cleaning during installation of work and upon completion of work. Remove from site all excess materials, debris, and equipment. Repair damage resulting from seeding operations.

END OF SECTION

SECTION 33 41 00

STORM DRAINAGE

PART 1 GENERAL

1.1 SUMMARY

A. Section Includes:
1. Storm drainage piping.
2. Joints and accessories.
3. Underground pipe markers.
4. Bedding and cover materials.

B. Related Sections:
1. Section 32 05 16 - Aggregates.

1.2 REFERENCES

A. American Association of State Highway and Transportation Officials:
1. AASHTO M294 – Specification for Corrugated Polyethylene Pipe, 305- to 915-mm (12- to 36-In.) Diameter.
2. AASHTO T99 – Standard Specification for the Moisture-Density Relations of Soils Using a 2.5 kg (5.5 lb) Rammer and a 305 mm (12 in.) Drop.

B. ASTM International:
1. ASTM A74 - Standard Specification for Cast Iron Soil Pipe and Fittings.
2. ASTM A929/A929M - Standard Specification for Steel Sheet, Metallic-Coated by the Hot-Dip Process for Corrugated Steel Pipe.
3. ASTM C14 - Standard Specification for Concrete Sewer, Storm Drain, and Culvert Pipe.
4. ASTM C969 - Standard Practice for Infiltration and Exfiltration Acceptance Testing of Installed Precast Concrete Pipe Sewer Lines.
5. ASTM D698 - Standard Test Method for Laboratory Compaction Characteristics of Soil Using Standard Effort (12,400 ft-lbf/ft3 (600 kN-m/m3)).
6. ASTM D1557 - Standard Test Method for Laboratory Compaction Characteristics of Soil Using Modified Effort (6,000 ft-lbf/ft3 (2,700 kN-m/m3)).
7. ASTM D2235 - Standard Specification for Solvent Cement for Acrylonitrile-Butadiene-Styrene (ABS) Plastic Pipe and Fittings.
8. ASTM D2321 - Standard Practice for Underground Installation of Thermoplastic Pipe for Sewers and Other Gravity-Flow Applications.
9. ASTM D2564 - Standard Specification for Solvent Cements for Poly (Vinyl Chloride) (PVC) Plastic Piping Systems.
10. ASTM D2729 - Standard Specification for Poly (Vinyl Chloride) (PVC) Sewer Pipe and Fittings.
11. ASTM D2855 - Standard Practice for Making Solvent-Cemented Joints with Poly (Vinyl Chloride) (PVC) Pipe and Fittings.
12. ASTM D2922 - Standard Test Method for Density of Soil and Soil-Aggregate in Place by Nuclear Methods (Shallow Depth).

13. ASTM D3017 - Standard Test Method for Water Content of Soil and Rock in Place by Nuclear Methods (Shallow Depth).
14. ASTM D3034 - Standard Specification for Type PSM Poly (Vinyl Chloride) (PVC) Sewer Pipe and Fittings.
15. ASTM F477 - Standard Specification for Elastomeric Seals (Gaskets) for Joining Plastic Pipe.

C. Illinois State Plumbing Code.

D. Standard Specifications for Water and Sewer Main Construction in Illinois, current edition.

E. Illinois Department of Transportation (IDOT): Standard Specifications for Road and Bridge Construction, 2016, and all addenda. References made to compensation, method of measurement and basis of payment shall not apply.

1.3 SUBMITTALS

A. Section 01 33 00 - Submittal Procedures: Requirements for submittals.

B. Manufacturer's Installation Instructions: Submit special procedures required to install Products specified.

C. Manufacturer's Certificate: Certify Products meet or exceed specified requirements.

1.4 CLOSEOUT SUBMITTALS

A. Section 01 70 00 - Execution and Closeout Requirements: Requirements for submittals.

B. Project Record Documents:
1. Accurately record actual locations of pipe runs, connections, cleanouts, and invert elevations.

C. Operation and Maintenance Data: Procedures for submittals.

1.5 COORDINATION

A. Section 01 30 00 - Administrative Requirements: Coordination and project conditions.

B. Coordinate the Work with termination of storm sewer connection outside building, trenching, and connection to municipal storm drainage.

PART 2 PRODUCTS

2.1 STORM DRAINAGE PIPING

A. Concrete: In accordance with IDOT Standard Specification Section 1042.

B. Polyvinyl Chloride (PVC): In accordance with IDOT Standard Specification Article 1040.03.

C. Polyethylene (PE): In accordance with IDOT Standard Specification Article 1040.04.

2.2 MANHOLES AND INLETS

A. Manholes and inlets shall be in accordance with IDOT Standard Specification Sections 602 and 604 and the plan set.

2.3 AGGREGATE AND BEDDING

A. Bedding: Fill Type CA-6 or CA-7

B. Cover: Fill Type FA-1 or FA-6.

C. Soil Backfill from Above Pipe to Finish Grade: Subsoil with no rocks over 6 inches in diameter, frozen earth or foreign matter.

2.4 UNDERGROUND PIPE MARKERS

A. Plastic Ribbon Tape: Bright colored, continuously printed, minimum 6 inches wide by 4 mil thick, manufactured for direct burial service.

B. Trace Wire: Magnetic detectable conductor, clear brightly colored plastic covering, imprinted with "Storm Sewer Service " in large letters.

2.5 CLEANOUTS

A. As specified in the Drawings.

PART 3 EXECUTION

3.1 EXAMINATION

A. Section 01 30 00 - Administrative Requirements: Verification of existing conditions before starting work.

B. Verify trench cut is ready to receive work and excavations, dimensions, and elevations are as indicated on the drawings.

C. All delivered pipe shall be inspected. Damaged pipe will not be accepted.

3.2 PREPARATION

A. Hand trim excavations to required elevations. Correct over excavation with coarse aggregate.

B. Remove large stones or other hard matter which could damage piping or impede consistent backfilling or compaction.

C. Maintain benchmarks, monuments, and other reference points.

3.3 INSTALLATION

A. Install pipe culverts in accordance with IDOT Standard Specification Section 542.

B. Install storm sewer in accordance with IDOT Standard Specification Section 550.

C. Install manholes and inlets in accordance with IDOT Standard Specification Sections 602 and 604.

3.4 FIELD QUALITY CONTROL

A. Section 01 40 00 - Quality Requirements 01 70 00 - Execution and Closeout Requirements: Field inspecting, testing, adjusting, and balancing.

B. Request inspection prior to and immediately after placing aggregate cover over pipe.

C. Compaction Testing: In accordance with ASTM D698.

D. When tests indicate work does not meet specified requirements, remove work, replace and retest.

3.5 PROTECTION OF FINISHED WORK

A. Section 01 70 00 - Execution and Closeout Requirements: Protecting finished Work.

B. Protect pipe and aggregate cover from damage or displacement until backfilling operation is in progress.
   1. Take care not to damage or displace installed pipe and joints during construction of pipe supports, backfilling, testing, and other operations.
   2. Repair or replace pipe that is damaged or displaced from construction operations.

3.6 ERECTION TOLERANCES

A. Lay pipe to alignment and slope gradients noted on Drawings; with maximum variation from indicated slope of 1/8 inch in 10 feet.

B. Maximum Variation From Intended Elevation of Invert: 1/2 inch.

C. Maximum Offset of Pipe From Indicated Alignment: 1 inch.

D. Maximum Variation in Profile of Structure From Intended Position: 1 percent.

END OF SECTION

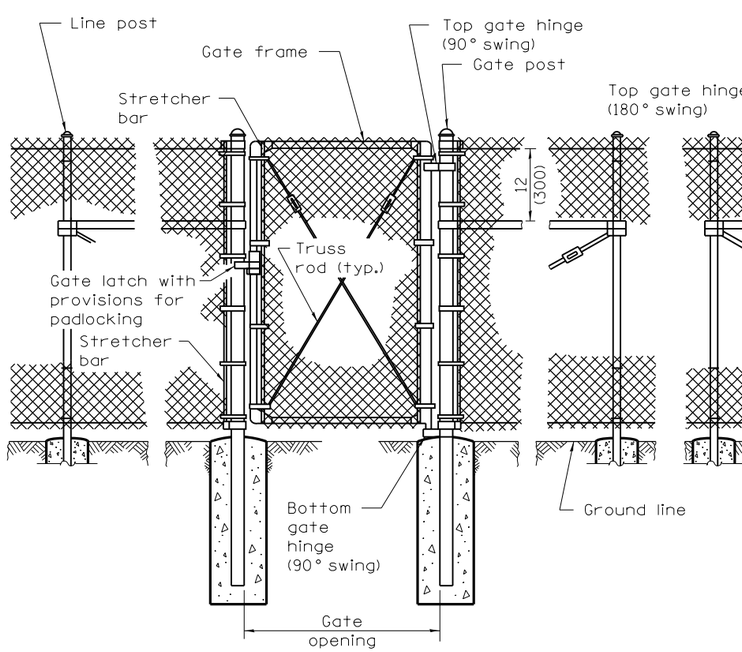

PEDESTRIAN GATE ARRANGEMENT

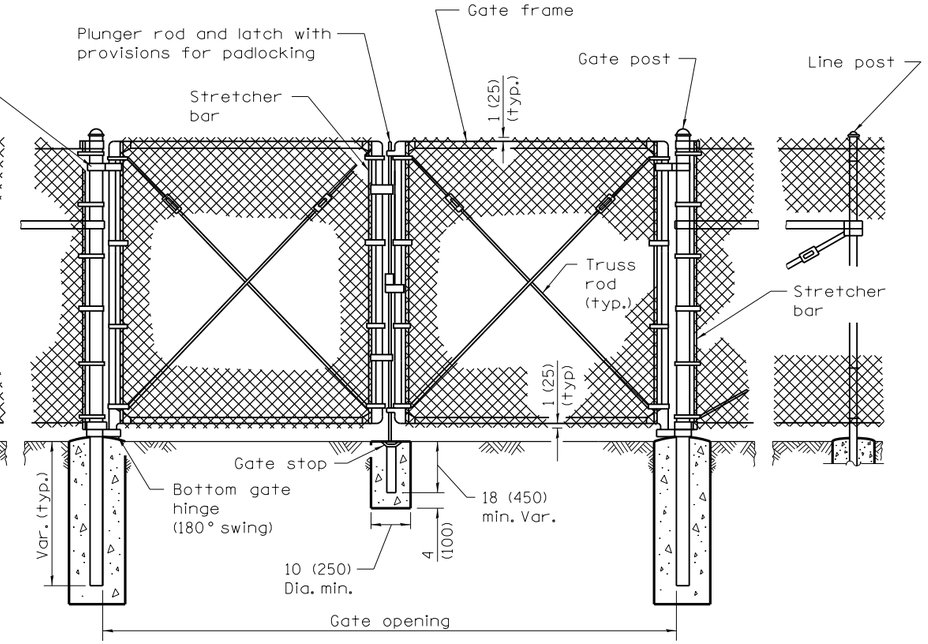

VEHICLE GATE ARRANGEMENT

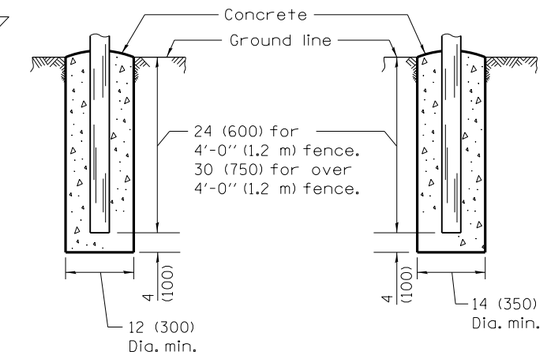

FOOTING FOR LINE POST

FOOTING FOR GATE & TERMINAL POST

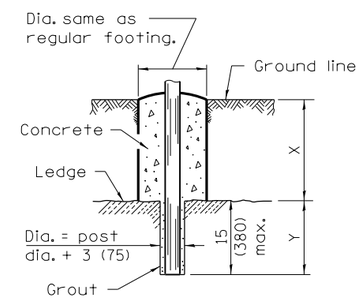

FOOTING FOR POST IN ROCK LEDGE

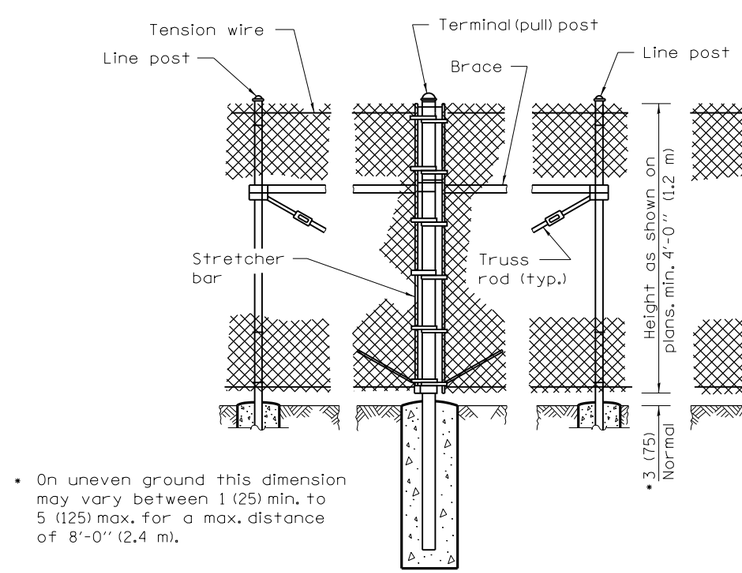

* On uneven ground this dimension may vary between 1 (25) min. to 5 (125) max. for a max. distance of 8'-0" (2.4 m).

PULL POST ARRANGEMENT

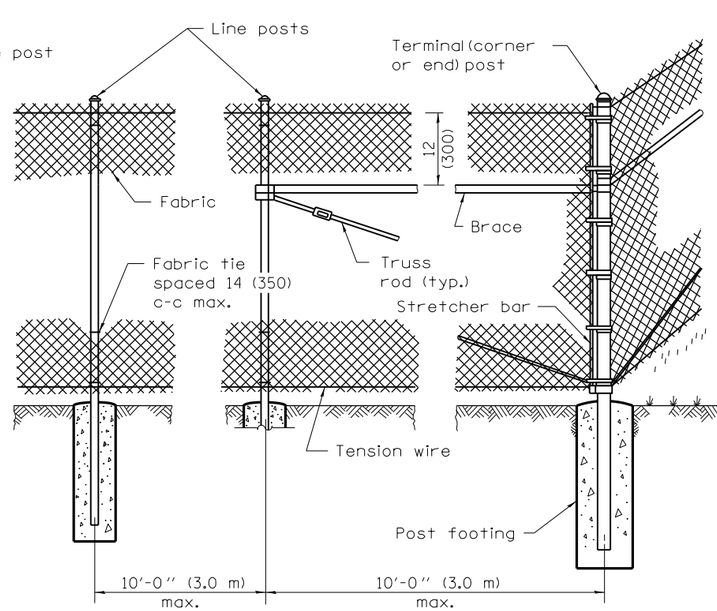

LINE POST ARRANGEMENT

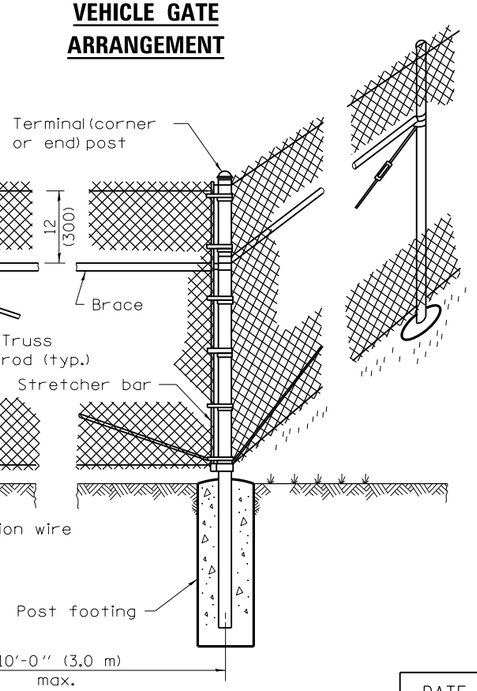

CORNER OR END POST ARRANGEMENT

GENERAL NOTES

Pull posts shall be placed at locations determined by the Engineer. They shall be placed at 660' (200 m) intervals between posts to which the ends of the fabric are clamped or midway between such posts when the distance is less than 1320' (400 m) and greater than 660' (200 m).

X + Y shall not exceed 24 (600), 30 (750), or 36 (900), as applicable. When X is 0 - 9 (0 - 225), 15 (380), or 21 (525), then Y = 15 (375) and the post shall be shortened as required. When X exceeds 9 (225), 15 (380), or 21 (525), then Y shall be decreased correspondingly.

All dimensions are in inches (millimeters) unless otherwise shown.

Illinois Department of Transportation

PASSED January 1, 2009
ENGINEER OF POLICY AND PROCEDURES
APPROVED January 1, 2009
ENGINEER OF DESIGN AND ENVIRONMENT

ISSUED 1-1-97

DATE	REVISIONS
1-1-09	Switched units to English (metric).
1-1-99	Rev. "pans" to "plans" in LINE POST ARRANGEMENT.

CHAIN LINK FENCE

(Sheet 1 of 3)

STANDARD 664001–02

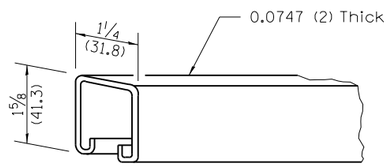

ROLL FORMED SECTION OF BRACE

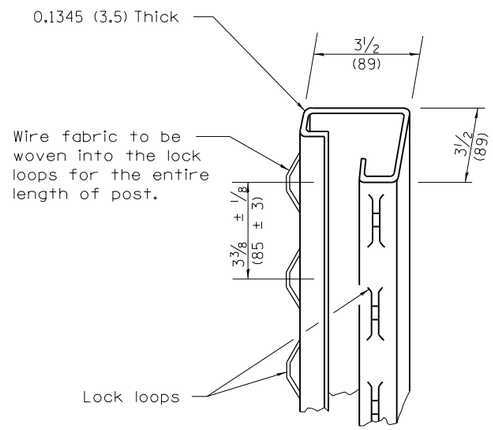

ROLL FORMED SECTION OF TERMINAL & GATE POST

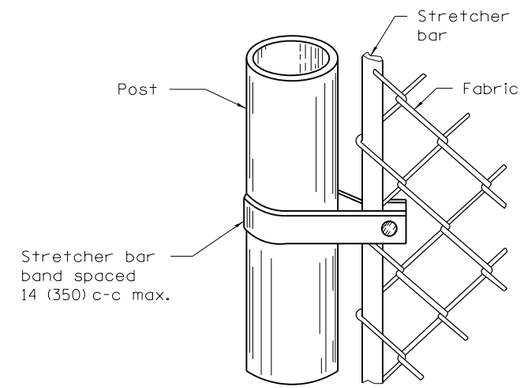

METHOD OF FASTENING STRETCHER BAR TO POST

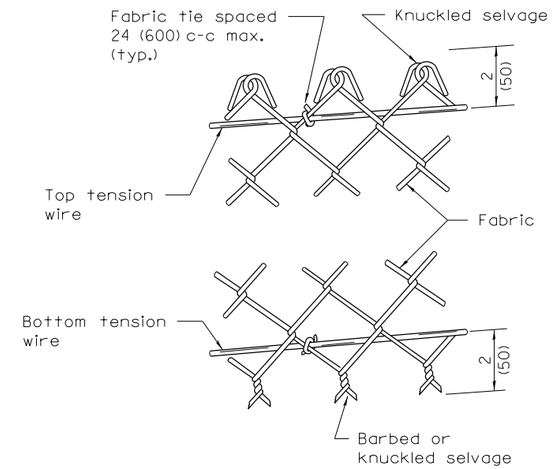

METHOD OF TYING FABRIC TO TENSION WIRES

LINE POST	
Section	lbs./ft. (kg/m)
Pipe Type A 1.90 (48.3) O.D.	2.72 (4.05)
Pipe Type B 1.90 (48.3) O.D.	2.28 (3.39)
Pipe Type C 1.90 (48.3) O.D.	2.26 (3.36)
H 1.875x1.625 (47.6x41.3)	2.72 (4.05)
⊏	1.60 (2.38)
I	2.30 (3.42)

TERMINAL POST	
Section	lbs./ft. (kg/m)
Pipe Type A 2.375 (60.3) O.D.	3.65 (5.43)
Pipe Type B 2.375 (60.3) O.D.	3.11 (4.63)
Pipe Type C 2.375 (60.3) O.D.	3.09 (4.60)
Roll Formed 3 1/2x3 1/2 (89.0x89.0)	See detail
Sq. Tubing 2 1/2x2 1/2 (63.5x63.5)	4.32 (6.43)

HORIZONTAL BRACES	
Section	lbs./ft. (kg/m)
Pipe Type A 1.66 (42.2) O.D.	2.27 (3.38)
Pipe Type B 1.66 (42.2) O.D.	1.83 (2.72)
Pipe Type C 1.66 (42.2) O.D.	1.82 (2.71)
H 1.31x1.5 (33.3x38.1)	2.25 (3.35)
Roll Formed 1 5/8x1 1/4 (41.3x31.8)	See detail

GATE FRAMES	
Section	lbs./ft. (kg/m)
Pipe Type A 1.66 (42.2) O.D.	2.27 (3.38)
Pipe Type B 1.66 (42.2) O.D.	1.83 (2.72)
Pipe Type C 1.66 (42.2) O.D.	1.82 (2.71)

GATE POSTS •							
Gate Opening • ft. (m)		Pipe Type A		Sq. Tubing		Pipe Type B	
Single	Double	Size (O.D.)	lbs./ft. (kg/m)	Size	lbs./ft. (kg/m)	Size (O.D.)	kg/m (lbs./ft.)
Up to 4 (1.2)	Up to 8 (2.5)	2.375 (60.3)	3.65 (5.43)	2 1/2 (63.5)	4.32 (6.43)	2.375 (60.3)	3.11 (4.63)
Over 4 (1.2) to 8 (2.5)	Over 8 (2.5) to 16 (5.0)	2.875 (73.0)	5.79 (8.62)	3 (76.2)	5.78 (8.60)	2.875 (73.0)	4.64 (6.91)
Over 8 (2.5) to 12 (3.6)	Over 16 (5.0) to 24 (7.4)	3.5 (89.0)	7.58 (11.28)	3 (76.2)	8.80 (13.10)	3.5 (89)	5.707 (8.49)

• The 3 1/2 x 3 1/2 (89.0 x 89.0) roll formed section as detailed may be used as gate posts for single gate up to 6′ (1.8 m) and double gate up to 12′ (3.6 m).

Illinois Department of Transportation

PASSED January 1, 2009
ENGINEER OF POLICY AND PROCEDURES
APPROVED January 1, 2009
ENGINEER OF DESIGN AND ENVIRONMENT

ISSUED 1-1-97

CHAIN LINK FENCE

(Sheet 2 of 3)

STANDARD 664001–02

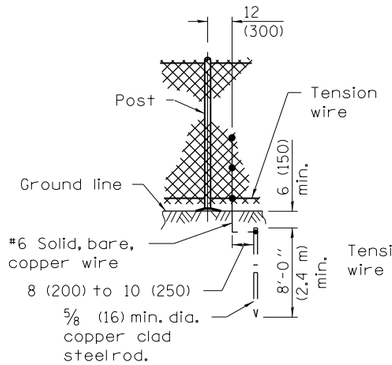

STANDARD GROUND

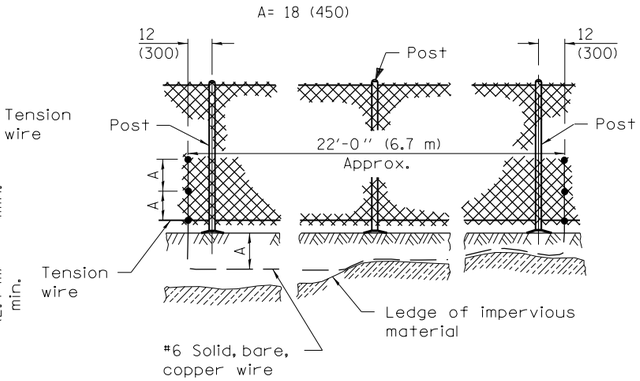

COUNTERPOISE GROUND
(ALTERNATE)

PROTECTIVE ELECTRICAL GROUNDS

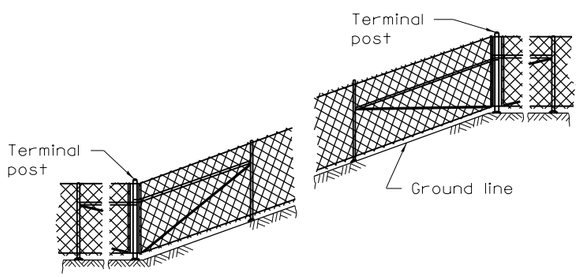

INSTALLATION ON SLOPES

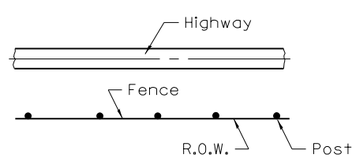

PLAN

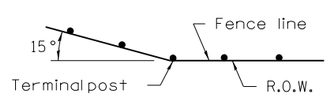

When fence line has a change in direction of 15° or more, a terminal post shall be placed as shown above.

Where angle is less than 15° and existing conditions require a terminal post, they shall be placed as directed by the Engineer.

INSTALLATION AT CORNERS

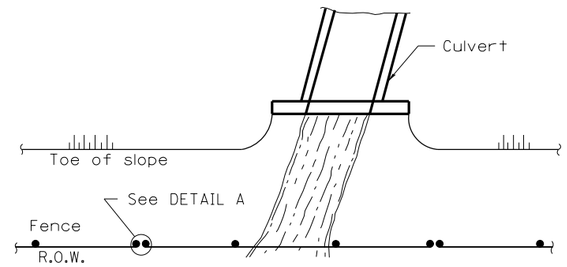

PLAN
AT STREAM CROSSING

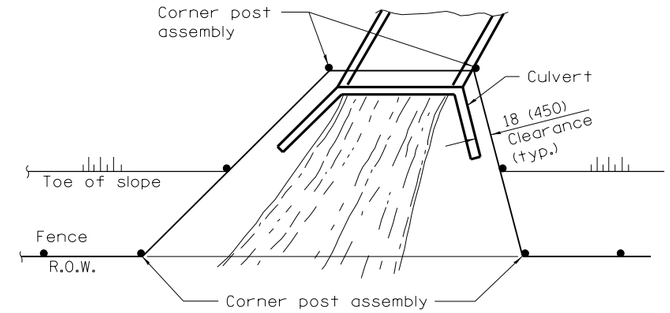

PLAN
AT HEADWALL

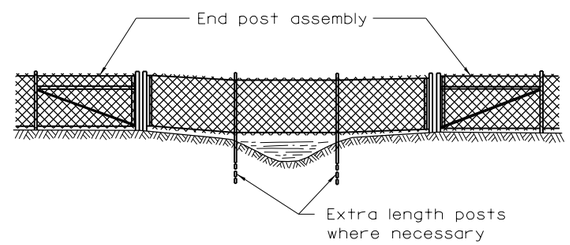

The chain link fabric shall be replaced by barbed wire strands at 12 (300) maximum centers between the double posts shown on DETAIL A when shown on the plans.

ELEVATION
INSTALLATION OVER STREAM

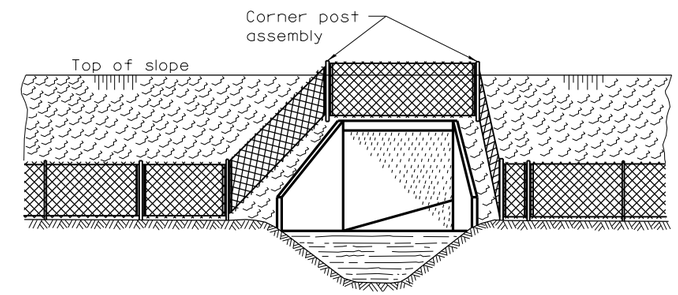

When the width of the culvert makes it necessary to anchor a post to the top of the culvert, a cast iron shoe or other device approved by the Engineer shall be used.

ELEVATION
INSTALLATION AROUND HEADWALL

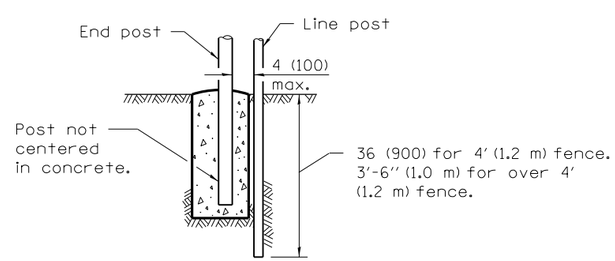

DETAIL A

Illinois Department of Transportation

PASSED January 1, 2009
ENGINEER OF POLICY AND PROCEDURES
APPROVED January 1, 2009
ENGINEER OF DESIGN AND ENVIRONMENT

ISSUED 1-1-97

CHAIN LINK FENCE

(Sheet 3 of 3)

STANDARD 664001–02

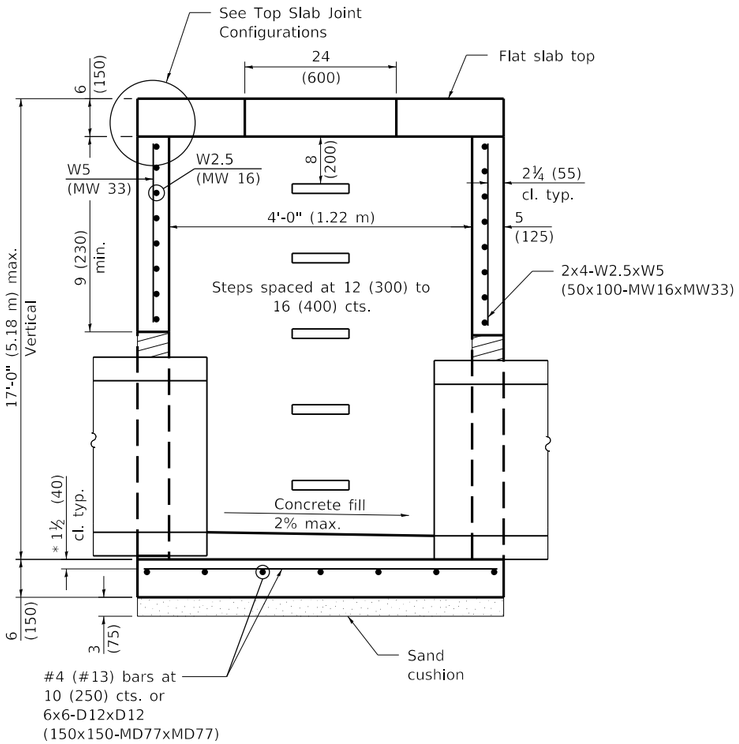

SECTION THRU MANHOLE

(With flat slab top only)

* Typical for top and bottom slabs.

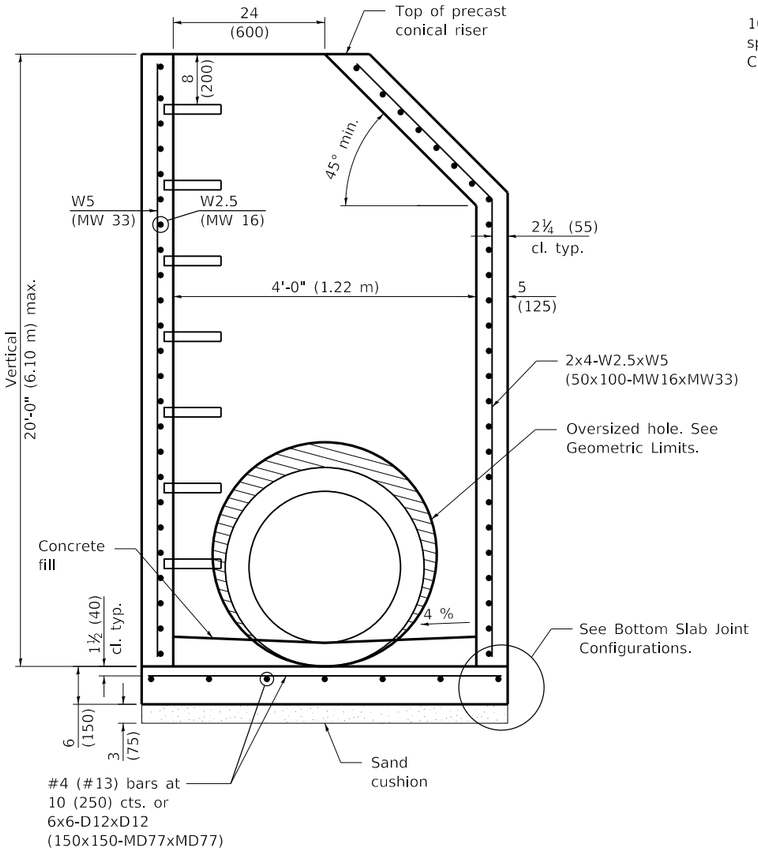

SECTION THRU MANHOLE

(With riser)

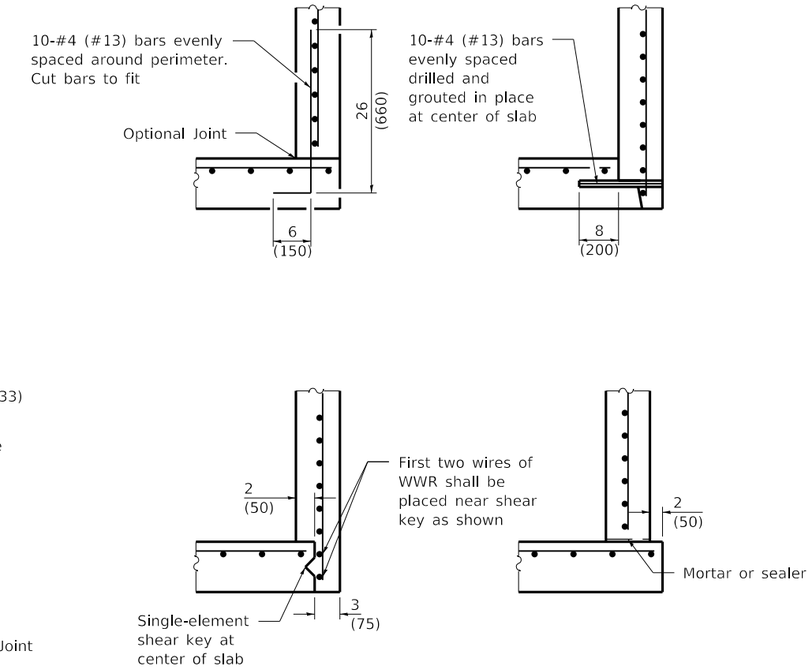

BOTTOM SLAB JOINT CONFIGURATIONS

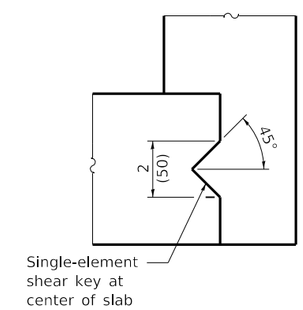

SHEAR KEY GEOMETRY

(Reinforcement not Shown for Clarity)

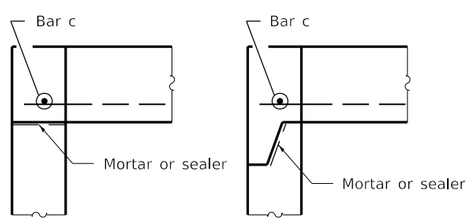

TOP SLAB JOINT CONFIGURATIONS

(Shown at access hole)

GEOMETRIC LIMITS

Oversized holes, as necessary for constructability, shall satisfy the following requirements:

1. A minimum of 9 (230) of monolithic reinforced concrete shall be maintained above the fabricated pipe hole.
2. A minimum 9 (230) inside arc length of reinforced concrete, extending vertically from bottom slab to top slab, shall be maintained between the fabricated pipe holes.
3. A maximum of 60 percent of the inside perimeter of the reinforced concrete manhole walls may be removed.
4. Horizontal joints through pipe holes shall be spliced when the remaining column between holes, measured along inside arc length, is less than 24 (600). See detail.
5. The recommended oversized hole is equal to the O.D. of the pipe plus 4 (100).

See Sheet 2 for General Notes.

DATE	REVISIONS
1-1-18	Completely revised std. for
	LRFD. Renamed std. Moved
	5' (1.5 m) manhole to new std.
1-1-11	Detailed rein. in slabs.
	Added max. limit to height.
	Revised general notes.

PRECAST MANHOLE TYPE A 4' (1.22 m) DIAMETER

(Sheet 1 of 2)

STANDARD 602401-04

Illinois Department of Transportation

PASSED January 1, 2018
Michael Brand
ENGINEER OF POLICY AND PROCEDURES

APPROVED January 1, 2018
Maureen M. Beck
ENGINEER OF DESIGN AND ENVIRONMENT

ISSUED 1-1-97

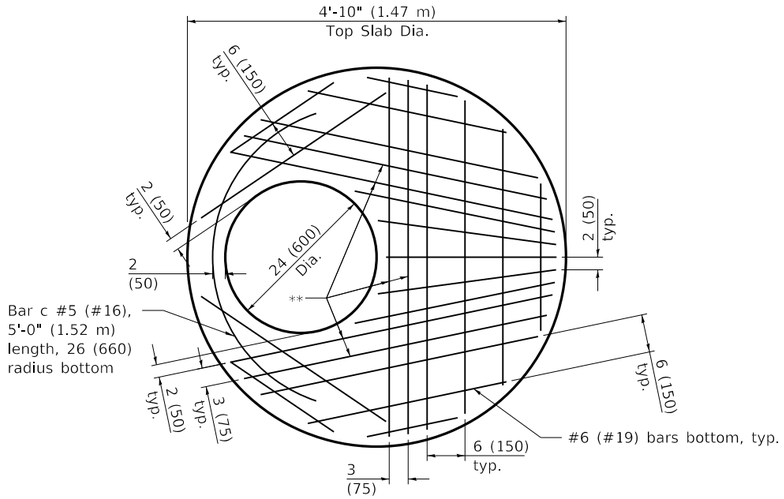

PLAN

(Showing Layout of Reinforcement Bars)

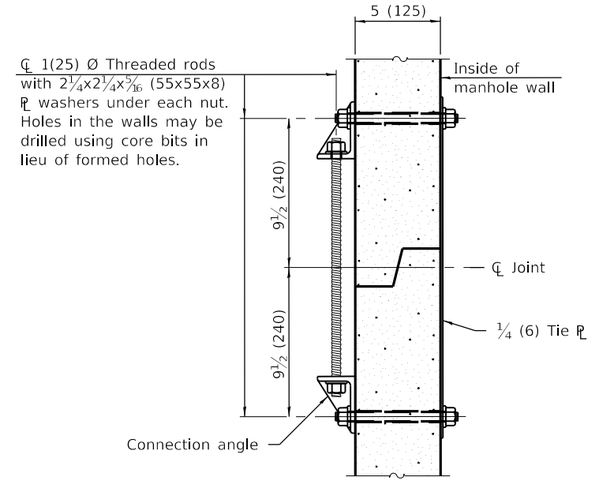

JOINT SPLICE

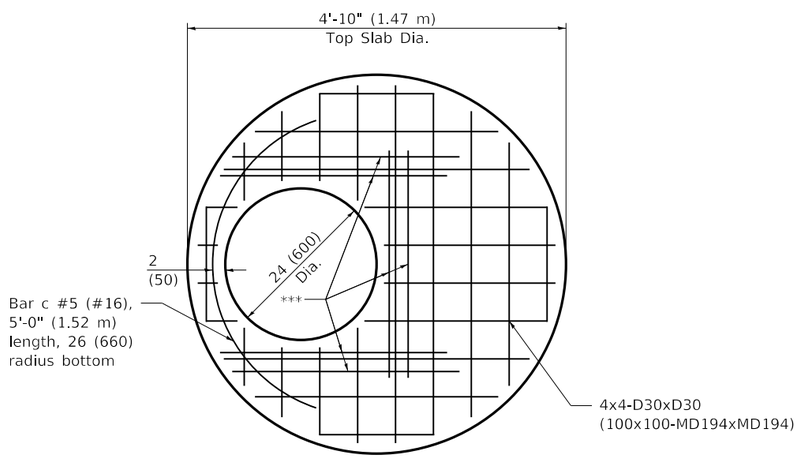

PLAN

(Showing Layout of Welded Wire Reinforcement)

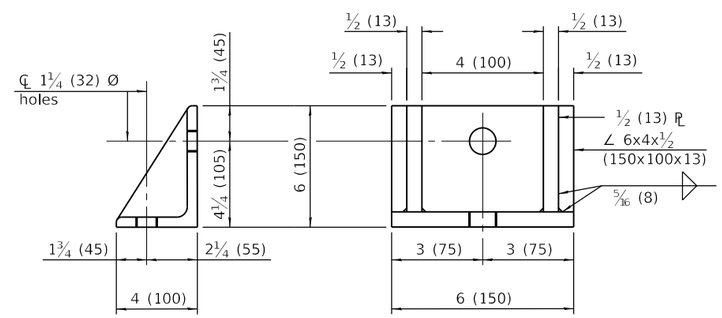

CONNECTION ANGLE

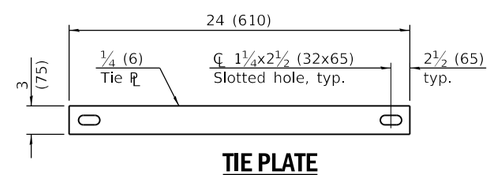

TIE PLATE

GENERAL NOTES

Joint configuration and dimensions of flat slab shall match and fit the riser joint detail.

The manufacturer shall ensure that all precast manhole sections are additionally reinforced where required to resist damage from handling, shipping and installation stresses.

Lifting holes shall be located in the sections as per the manufacturer's recommendations and grouted prior to backfilling.

See Standard 602701 for details of manhole steps.

All dimensions are in inches (millimeters) unless otherwise noted.

** #5 (#16) bars at 3 (75) cts. bottom.

*** #5 (#16) bars at 3 (75) cts. 36 (910) long bottom. Bundle first bar with closest WWR bar to the opening.

Illinois Department of Transportation

PASSED January 1, 2018
Michael Brand
ENGINEER OF POLICY AND PROCEDURES

APPROVED January 1, 2018
Maureen M. Addis
ENGINEER OF DESIGN AND ENVIRONMENT

ISSUED 1-1-97

PRECAST MANHOLE TYPE A 4' (1.22 m) DIAMETER

(Sheet 2 of 2)

STANDARD 602401-04

CAST IRON STEPS

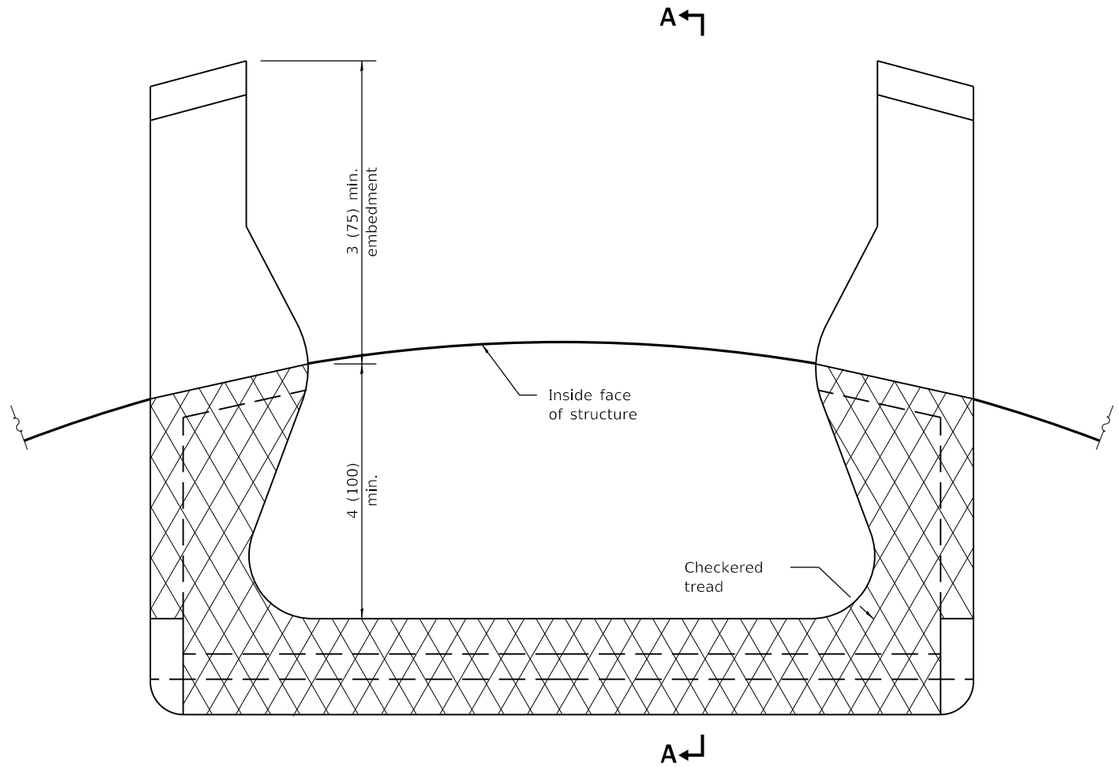

PLAN VIEW

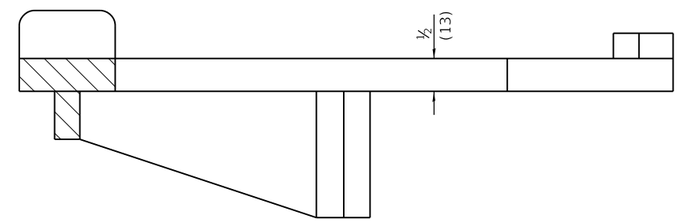

SECTION A-A

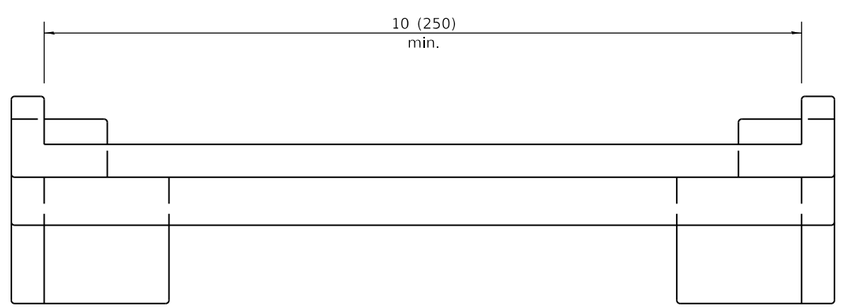

ELEVATION VIEW

All dimensions are in inches (millimeters)
unless otherwise shown.

DATE	REVISIONS
1-1-09	Switched units to
	English (metric).
4-1-06	Revised title, drawings,
	and added plastic
	steps on sheet 2.

MANHOLE STEPS

(Sheet 1 of 2)

STANDARD 602701-02

Illinois Department of Transportation

PASSED January 1, 2009
ENGINEER OF POLICY AND PROCEDURES

APPROVED January 1, 2009
ENGINEER OF DESIGN AND ENVIRONMENT

ISSUED 1-1-97

PLASTIC STEPS

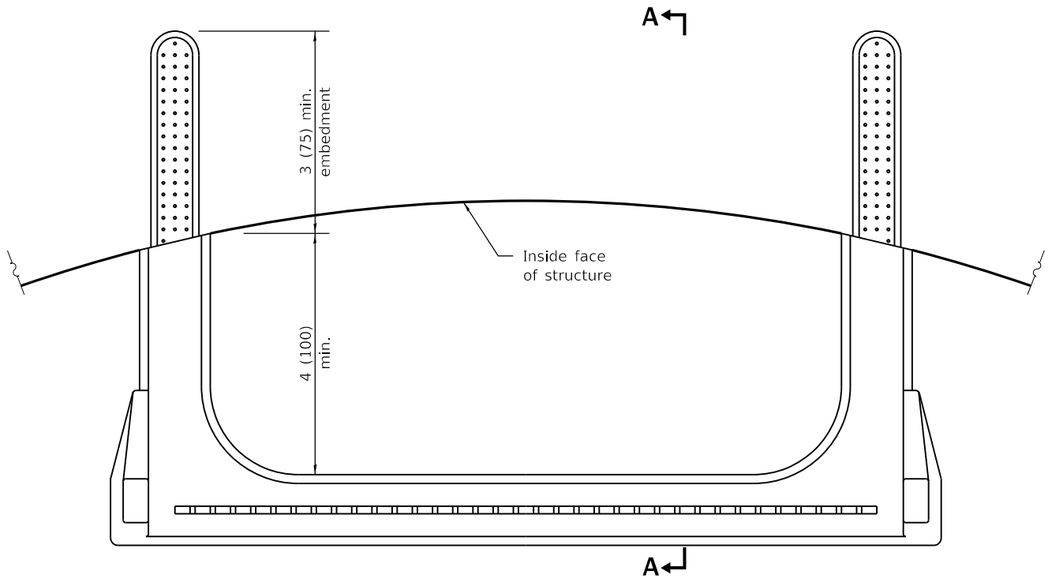

PLAN VIEW

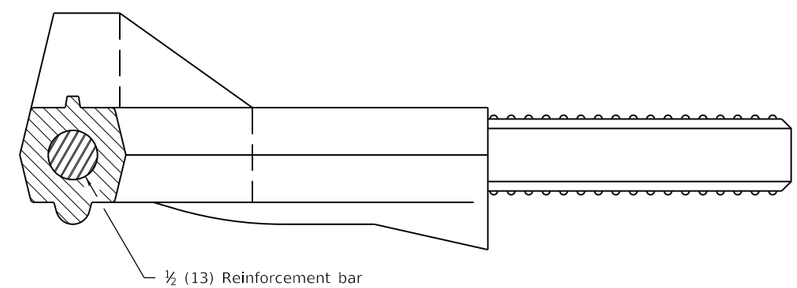

SECTION A-A

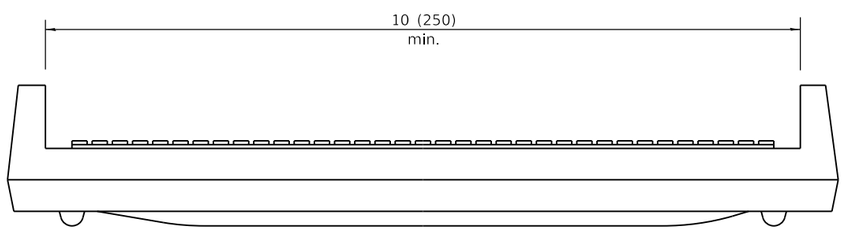

ELEVATION VIEW

Illinois Department of Transportation

PASSED January 1, 2009

ENGINEER OF POLICY AND PROCEDURES

APPROVED January 1, 2009

ENGINEER OF DESIGN AND ENVIRONMENT

ISSUED 1-1-97

MANHOLE STEPS

(Sheet 2 of 2)

STANDARD 602701-02

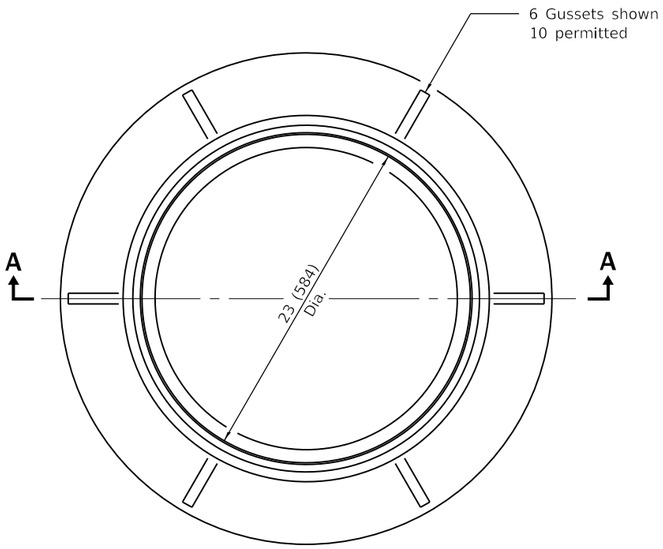

CAST FRAME

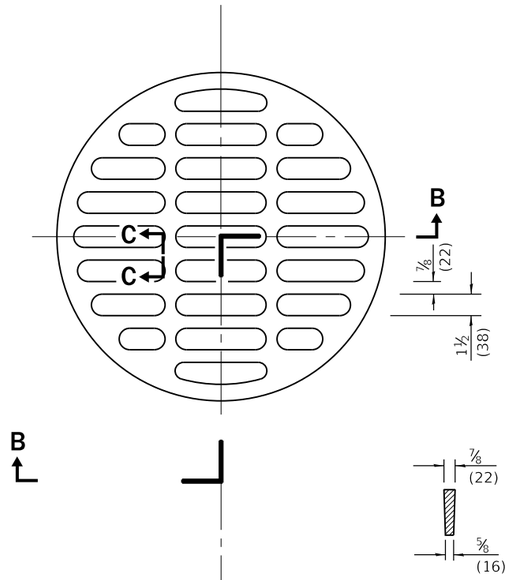

SECTION C-C

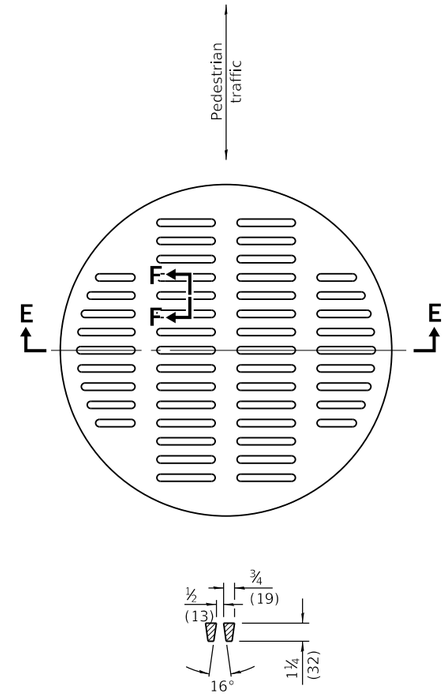

SECTION F-F

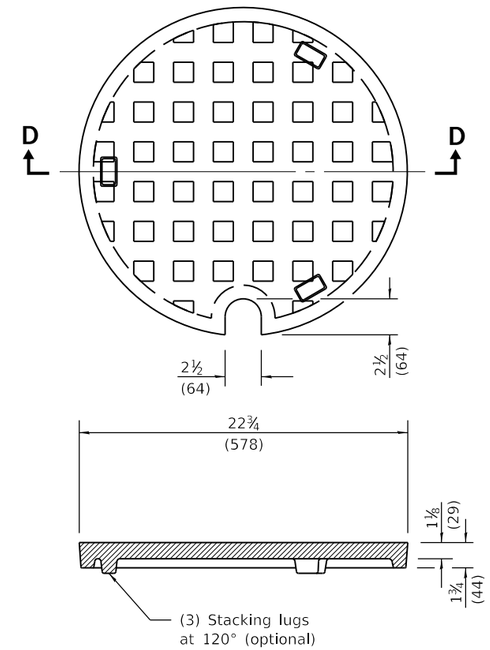

SECTION D-D

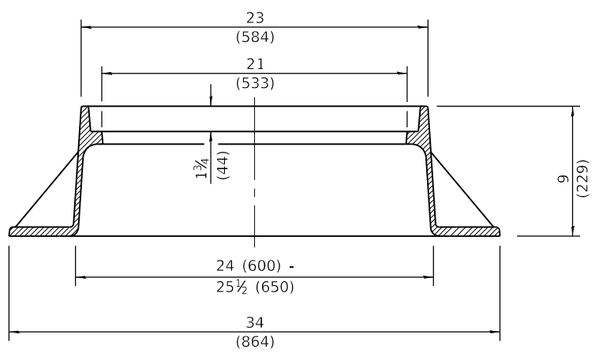

SECTION A-A
Gray Iron

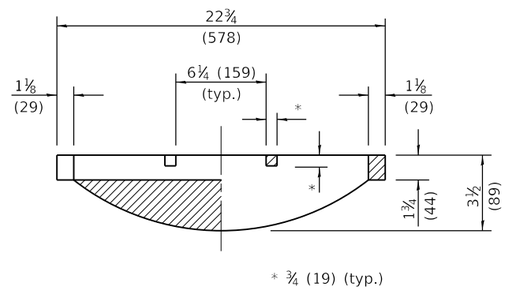

SECTION B-B

CAST OPEN LID

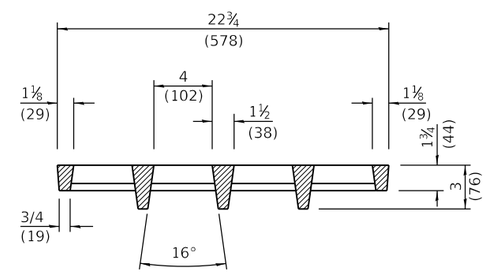

SECTION E-E

ADA COMPLIANT
CAST OPEN LID

CAST CLOSED LID
Gray Iron Lid

All dimensions are in inches (millimeters)
unless otherwise shown.

Illinois Department of Transportation

PASSED January 1, 2015
Michael Brand
ENGINEER OF POLICY AND PROCEDURES
APPROVED January 1, 2015
ENGINEER OF DESIGN AND ENVIRONMENT

ISSUED 1-1-97

DATE	REVISIONS
1-1-15	Revised dimensioning of
	frame. Added ADA compliant
	open lid.
1-1-09	Switched units to
	English (metric).

FRAME AND LIDS TYPE 1

STANDARD 604001-04

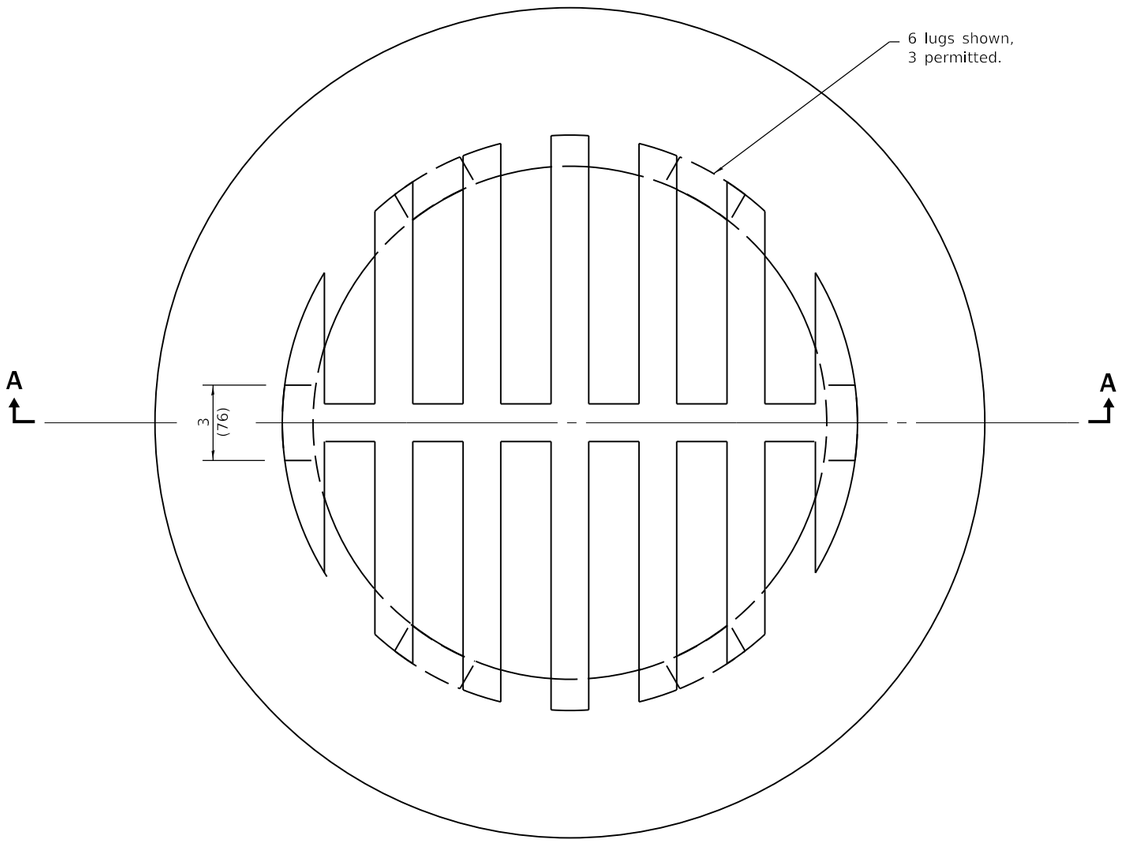

CAST GRATE

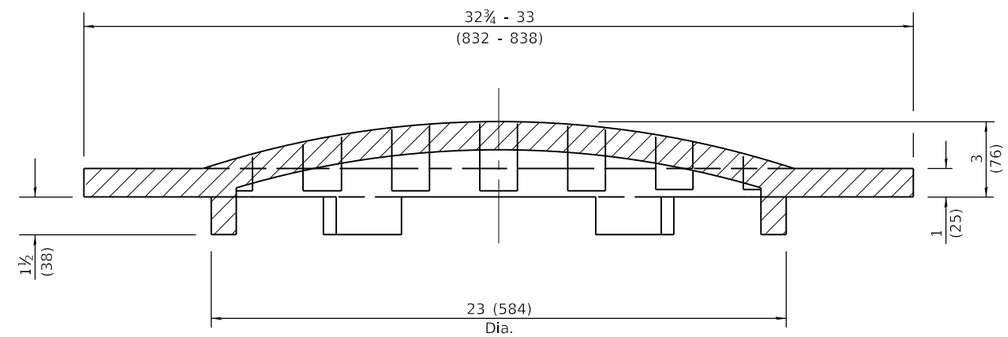

SECTION A-A

All dimensions are in inches (millimeters)
unless otherwise shown.

Illinois Department of Transportation

PASSED January 1, 2015
Michael Brand
ENGINEER OF POLICY AND PROCEDURES

APPROVED January 1, 2015
ENGINEER OF DESIGN AND ENVIRONMENT

ISSUED 1-1-97

DATE	REVISIONS
1-1-15	Revised dimensions.
1-1-09	Switched units to
	English (metric).

GRATE TYPE 8

STANDARD 604036-03